2017 PATHFINDER

OWNER'S MANUAL
and MAINTENANCE INFORMATION

For your safety, read carefully and keep in this vehicle.

Owner's Manual Supplement

The information contained within this supplement revises or adds the following information in the 2016 and 2017 Nissan Pathfinder Owner's Manuals:

- Panoramic Sunshade in the "Instruments and controls" section

Read carefully and keep in vehicle.

Printing: March 2017
Publication No. SU17EA 1R52U0

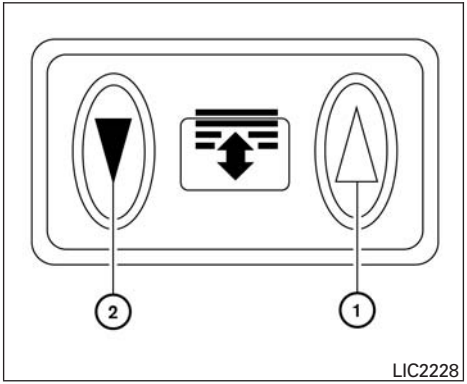

Panoramic sunshade

The panoramic sunshade operates when the ignition switch is in the ON position. The sunshade switch is located near the roof console. When opening or closing the sunshade the switch need not be held.

To open the sunshade:

- To fully open the sunshade, push the switch ① toward the open position.

To close the sunshade:

- To fully close the sunshade, push the switch ② toward the close position.

⚠ WARNING

- **To avoid personal injury, keep your hands, fingers and head away from the sunshade arm, the arm rail and sunshade inlet port.**
- **Do not allow children near the rear sunshade system. They could be injured.**
- **Do not place objects on or near the rear sunshade. This could cause improper operation or damage it.**
- **Do not pull or push the rear sunshade. This could cause improper operation or damage it.**

⚠ CAUTION

- **Do not place objects (such as newspapers, handkerchiefs, etc.) on the sunshade inlet port. Doing so may entangle these objects in the sunshade when it is extending or retracting, causing improper operation or damage to the sunshade.**
- **Do not push the sunshade arm with your hands, etc., as this may deform it. Improper operation or damage to the sunshade may result.**
- **Do not put any object into the sunshade inlet port as this may result in improper operation or damage the sunshade.**
- **Do not hang any object on the arm rail as this may result in improper operation or damage the sunshade.**
- **Do not forcefully pull the sunshade. Doing so may elongate the sunshade. Improper operation or damage to the sunshade may result.**

Restarting the sunshade switch

If the sunshade does not operate properly, perform the following procedure to initialize the sunshade operation system.

1. Switch the vehicle ignition to the ACCESSORY or RUN mode.
2. Press and hold the sunshade close switch.
3. Sunshade will begin moving towards the close position only while the switch is continually pressed. (this disables the obstacle detection).
4. Sunshade will stop for about 4 seconds.
5. Sunshade drive cable will travel in the open direction for .394 in. (10 mm) then reverse direction and stop at the normal close position.

6. Release the sunshade close switch. Initialization procedure is complete.

If the moonroof does not operate properly after performing the procedure above, have your vehicle checked by a NISSAN dealer.

Auto-reverse function (when closing the sunshade)

The auto-reverse function can be activated when the sunshade is closed by automatic operation when the ignition switch is placed in the ON position or for a period of time after the ignition switch is placed in the OFF position.

Depending on the environment or driving conditions, the auto-reverse function may be activated if an impact or load similar to something being caught in the sunshade occurs.

⚠ WARNING

There are some small distances immediately before the closed position which cannot be detected. Make sure that all of the passengers have their hands, etc., inside the vehicle before closing the sunshade.

FOREWORD

Welcome to the growing family of new NISSAN owners. This vehicle is delivered to you with confidence. It was produced using the latest techniques and strict quality control.

This manual was prepared to help you understand the operation and maintenance of your vehicle so that you may enjoy many miles (kilometers) of driving pleasure. Please read through this manual before operating your vehicle.

A separate Warranty Information Booklet explains details about the warranties covering your vehicle. The "Maintenance and schedules" section of this manual explains details about maintaining and servicing your vehicle. Additionally, a separate Customer Care/Lemon Law Booklet (U.S. only) will explain how to resolve any concerns you may have with your vehicle, and clarify your rights under your state's lemon law.

When you require any service or have any questions, a NISSAN dealer will be glad to assist you with the extensive resources available to them.

In addition to factory-installed options, your vehicle may also be equipped with additional accessories installed prior to delivery. It is recommended that you visit a NISSAN dealer for details concerning the particular accessories with which your vehicle is equipped. It is important that you familiarize yourself with all disclosures, warnings, cautions and instructions concerning proper use of such accessories prior to operating the vehicle and/or accessory. It is recommended that you visit a NISSAN dealer for details concerning the particular accessories with which your vehicle is equipped.

READ FIRST—THEN DRIVE SAFELY

Before driving your vehicle, please read this Owner's Manual carefully. This will ensure familiarity with controls and maintenance requirements, assisting you in the safe operation of your vehicle.

⚠ WARNING

IMPORTANT SAFETY INFORMATION REMINDERS!

Follow these important driving rules to help ensure a safe and comfortable trip for you and your passengers!

- **NEVER drive under the influence of alcohol or drugs.**
- **ALWAYS observe posted speed limits and never drive too fast for conditions.**
- **ALWAYS give your full attention to driving and avoid using vehicle features or taking other actions that could distract you.**
- **ALWAYS use your seat belts and appropriate child restraint systems. Pre-teen children should be seated in the rear seat.**
- **ALWAYS provide information about the proper use of vehicle safety features to all occupants of the vehicle.**
- **ALWAYS review this Owner's Manual for important safety information.**

For descriptions specified for 4-wheel drive models, a **4WD** mark is placed at the beginning of the applicable sections/items.

As with other vehicles with features for off-road use, failure to operate 4-wheel drive models correctly may result in loss of control or an accident. For additional information, refer to "Driving safety precautions" in the "Starting and driving" section of this manual.

ON-PAVEMENT AND OFF-ROAD DRIVING

This vehicle will handle and maneuver differently from an ordinary passenger car because it has a higher center of gravity for off-road use. As with other vehicles with features of this type, failure to operate this vehicle correctly may result in loss of control or an accident.

For additional information, refer to "On-pavement and off-road driving precautions", "Avoiding collision and rollover" and "Driving safety precautions" in the "Starting and driving" section of this manual.

MODIFICATION OF YOUR VEHICLE

This vehicle should not be modified. Modification could affect its performance, safety, emissions or durability and may even violate governmental regulations. In addition, damage or performance problems resulting from modifications may not be covered under NISSAN warranties.

⚠ WARNING

Installing an aftermarket On-Board Diagnostic (OBD) plug-in device that uses the port during normal driving, for example remote insurance company monitoring, remote vehicle diagnostics, telematics or engine reprogramming, may cause interference or damage to vehicle systems. We do not recommend or endorse the use of any aftermarket OBD plug-in devices, unless specifically approved by NISSAN. The vehicle warranty may not cover damage caused by any aftermarket plug-in device.

This manual includes information for all features and equipment available on this model. Features and equipment in your vehicle may vary depending on model, trim level, options selected, order, date of production, region or availability. Therefore, you may find information about features or equipment that are not included or installed on your vehicle.

All information, specifications and illustrations in this manual are those in effect at the time of printing. NISSAN reserves the right to change specifications, performance, design or component suppliers without notice and without obligation. From time to time, NISSAN may update or revise this manual to provide Owners with the most accurate information currently available. Please carefully read and retain with this manual all revision updates sent to you by NISSAN to ensure you have access to accurate and up-to-date information regarding your vehicle. Current versions of vehicle Owner's Manuals and any updates can also be found in the Owner section of the NISSAN website at **https://owners.nissanusa.com/nowners/navigation/manualsGuide**. If you have questions concerning any information in your Owner's Manual, contact NISSAN Consumer Affairs. Refer to NISSAN CUSTOMER CARE PROGRAM page in this Owner's Manual for contact information.

IMPORTANT INFORMATION ABOUT THIS MANUAL

You will see various symbols in this manual. They are used in the following ways:

⚠ WARNING

This is used to indicate the presence of a hazard that could cause death or serious personal injury. To avoid or reduce the risk, the procedures must be followed precisely.

⚠ CAUTION

This is used to indicate the presence of a hazard that could cause minor or moderate personal injury or damage to your vehicle. To avoid or reduce the risk, the procedures must be followed carefully.

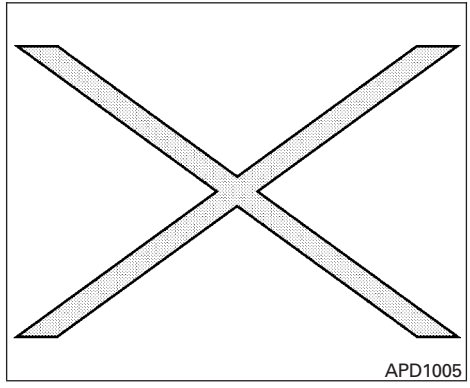

If you see this symbol, it means **"Do not do this"** or **"Do not let this happen."**

If you see a symbol similar to these in an illustration, it means the arrow points to the front of the vehicle.

Arrows in an illustration that are similar to these indicate movement or action.

Arrows in an illustration that are similar to these call attention to an item in the illustration.

CALIFORNIA PROPOSITION 65 WARNING

⚠ WARNING

Engine exhaust, some of its constituents, and certain vehicle components contain or emit chemicals known to the State of California to cause cancer and birth defects or other reproductive harm. In addition, certain fluids contained in vehicles and certain products of component wear contain or emit chemicals known to the State of California to cause cancer and birth defects or other reproductive harm.

CALIFORNIA PERCHLORATE ADVISORY

Some vehicle parts, such as lithium batteries, may contain perchlorate material. The following advisory is provided: "Perchlorate Material – special handling may apply. For additional information, refer to www.dtsc.ca.gov/hazardouswaste/perchlorate/".

The Bluetooth® word mark and logos are registered trademarks owned by Bluetooth SIG, Inc. and any use of such marks by DENSO CORPORATION is under license. Other trademarks and trade names are those of their respective owners.

SiriusXM® services require a subscription after trial period and are sold separately or as a package. The satellite service is available only in the 48 contiguous USA and DC. SiriusXM® satellite service is also available in Canada; see www.siriusxm.ca.

© 2017 NISSAN NORTH AMERICA, INC.

All rights reserved. No part of this Owner's Manual may be reproduced or stored in a retrieval system, or transmitted in any form, or by any means, electronic, mechanical, photocopying, recording or otherwise, without the prior written permission of Nissan North America, Inc.

NISSAN CUSTOMER CARE PROGRAM

NISSAN CARES . . .

Both NISSAN and your NISSAN dealer are dedicated to serving all your automotive needs. Your satisfaction with your vehicle and your NISSAN dealer are our primary concerns. Your NISSAN dealer is always available to assist you with all your automobile sales and service needs.

However, if there is something that your NISSAN dealer cannot assist you with or you would like to provide NISSAN directly with comments or questions, please contact the NISSAN Consumer Affairs Department using our toll-free number:

For U.S. customers
1-800-NISSAN-1
(1-800-647-7261)

For Canadian customers
1-800-387-0122

The Consumer Affairs Department will ask for the following information:

- Your name, address, and telephone number
- Vehicle identification number (attached to the top of the instrument panel on the driver's side)
- Date of purchase
- Current odometer reading
- Your NISSAN dealer's name
- Your comments or questions

OR

You can write to NISSAN with the information at:

For U.S. customers
Nissan North America, Inc.
Consumer Affairs Department
P.O. Box 685003
Franklin, TN 37068-5003
or via e-mail at:
nnaconsumeraffairs@nissan-usa.com

For Canadian customers
Nissan Canada Inc.
5290 Orbitor Drive
Mississauga, Ontario L4W 4Z5
or via e-mail at:
information.centre@nissancanada.com

If you prefer, visit us at:
www.nissanusa.com (for U.S. customers) or
www.nissan.ca (for Canadian customers)

We appreciate your interest in NISSAN and thank you for buying a quality NISSAN vehicle.

Table of Contents

Illustrated table of contents	0
Safety—Seats, seat belts and supplemental restraint system	1
Instruments and controls	2
Pre-driving checks and adjustments	3
Monitor, climate, audio, phone and voice recognition systems	4
Starting and driving	5
In case of emergency	6
Appearance and care	7
Do-it-yourself	8
Maintenance and schedules	9
Technical and consumer information	10
Index	11

0 Illustrated table of contents

Air bags, seat belts and child restraints 0-2
Exterior front 0-3
Exterior rear. 0-4
Passenger compartment 0-5
Instrument panel. 0-6
Engine compartment check locations 0-8
Warning and indicator lights 0-9

AIR BAGS, SEAT BELTS AND CHILD RESTRAINTS

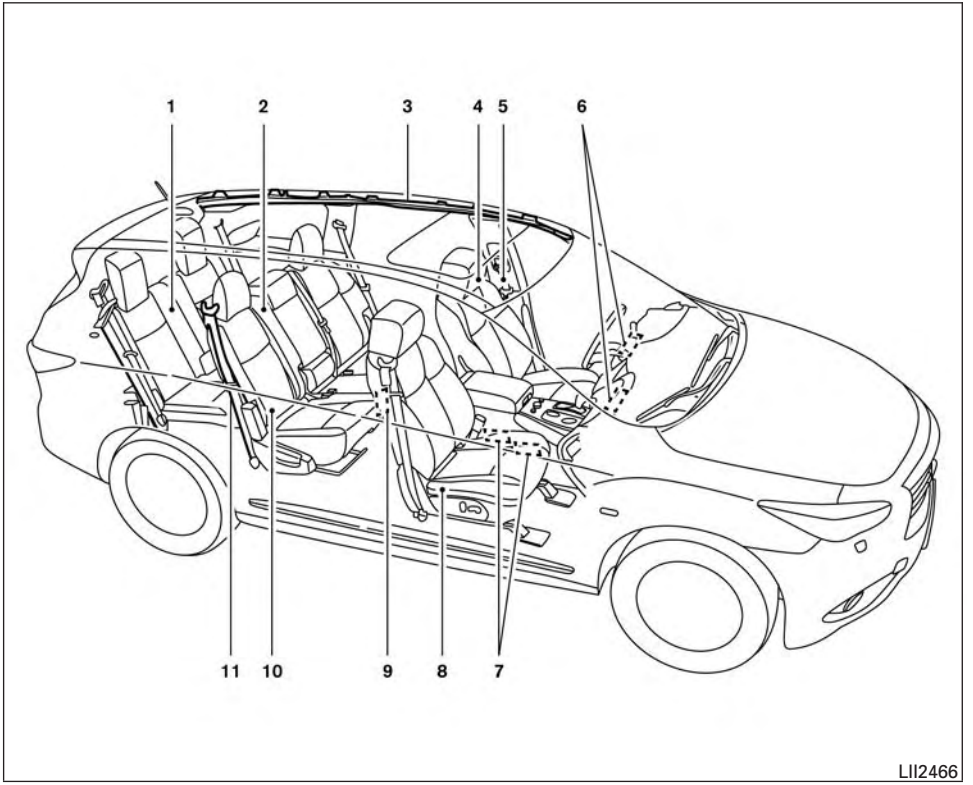

1. Folding 3rd row bench (P. 1-2)
2. Folding 2nd row bench (P. 1-2)
3. Roof-mounted curtain side-impact and rollover supplemental air bag (P. 1-49)
4. Head restraints/headrests (P.1-12)
5. Seat belts with pretensioner(s) and shoulder height adjuster (P. 1-17, 1-49)
6. Supplemental air bags (P.1-49)
7. Occupant classification sensor (weight sensor) (P. 1-49)
8. Seats (P. 1-2)
9. Front seat-mounted side-impact supplemental air bag (P. 1-49)
10. LATCH (Lower Anchors and Tethers for CHildren) (P. 1-27)
11. Second row seat top tether strap anchor (located on bottom of seatback) (P. 1-27)

Refer to the page number indicated in parentheses for operating details.

EXTERIOR FRONT

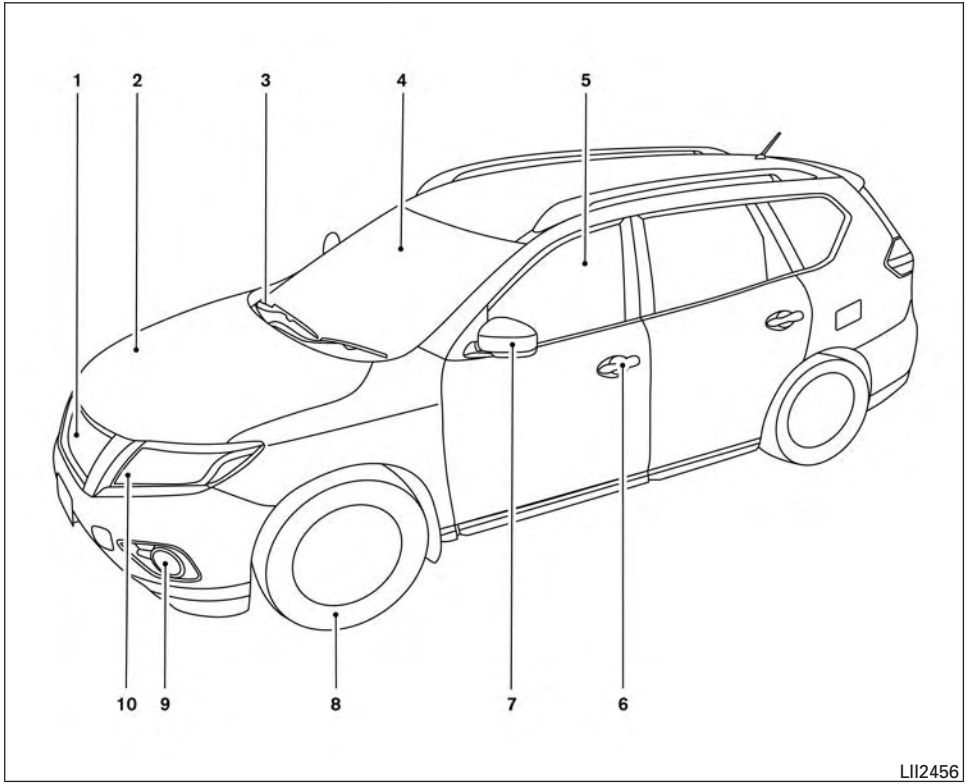

1. Front view camera (if so equipped) (P. 4-28)
2. Engine hood (P. 3-20)
3. Wiper and washer switch (P. 2-33)
4. Windshield-washer fluid (P. 8-11)
5. Power windows (P. 2-58)
6. Door locks (P. 3-5)
   NISSAN Intelligent Key® (P. 3-7)
   Keys (P. 3-2)
7. Mirrors (P. 3-33)
   Side view camera (if so equipped) (P. 4-28)
8. Tire pressure (P. 8-25)
   Flat tire (P. 6-3)
   Tire chains (P. 8-25)
9. Fog light switch (if so equipped) (P. 2-36)
10. Replacing bulbs (P. 8-22)
    Headlight and turn signal switch (P. 2-36)
    Daytime running lights (P. 2-36)

Refer to the page number indicated in parentheses for operating details.

EXTERIOR REAR

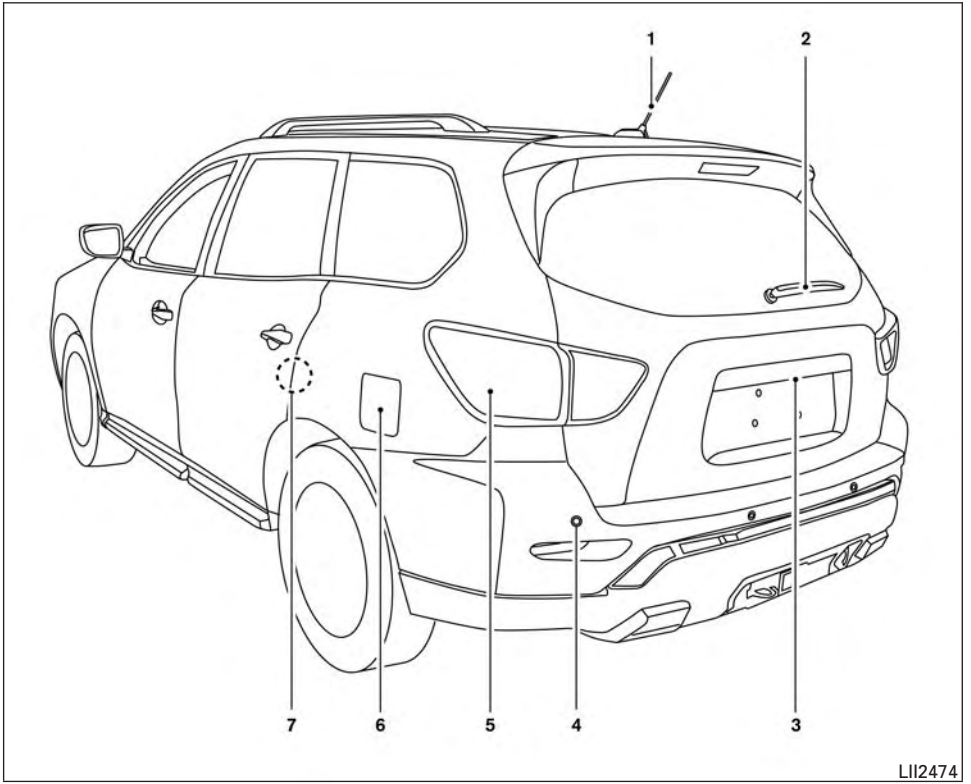

1. Antenna (P. 4-70)
2. Rear window wiper and washer switch (P. 2-33)
3. Liftgate release (P. 3-21)
   Rearview camera (P. 4-21, 4-28)
4. Rear sonar sensors (if so equipped) (P. 5-73)
5. Replacing bulbs (P. 8-22)
6. Fuel-filler cap (P. 3-28)
   Fuel recommendation (P. 10-2)
   Fuel-filler door (P. 3-28)
7. Child safety rear door lock (P. 3-5)

Refer to the page number indicated in parentheses for operating details.

PASSENGER COMPARTMENT

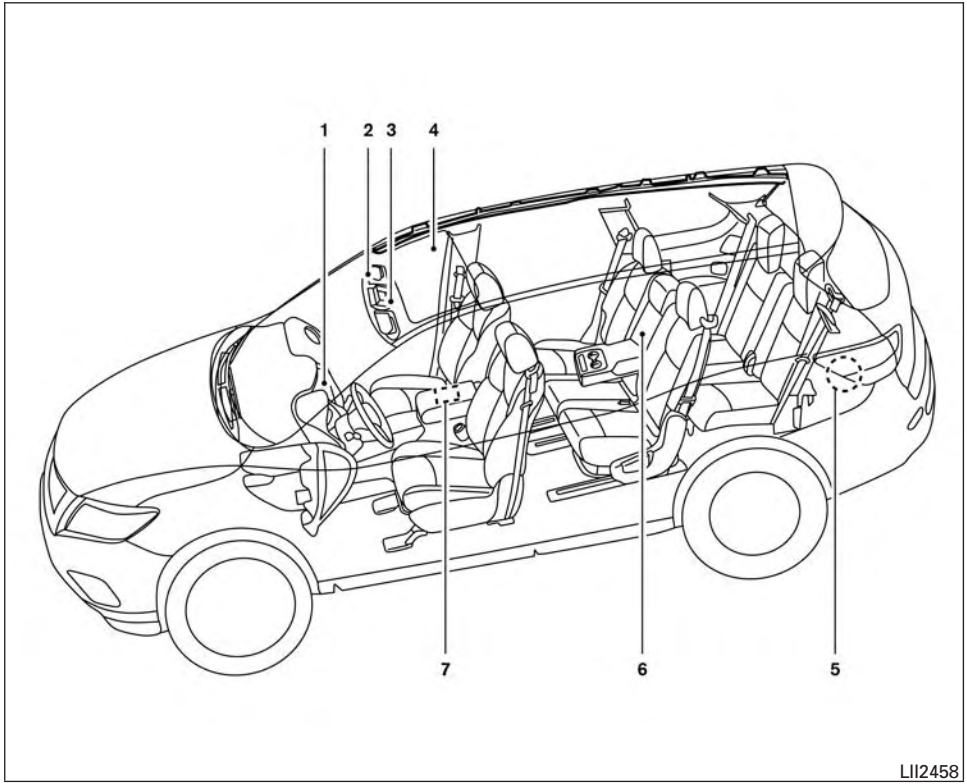

1. Glove box (P. 2-51)
2. Sun visors (P. 3-32)
3. Map lights (P. 2-63)
4. Power moonroof (if so equipped) (P. 2-61)
5. Luggage hooks (P. 2-51)
6. Cup holders (P. 2-51)
7. Console box (P. 2-51)

Refer to the page number indicated in parentheses for operating details.

INSTRUMENT PANEL

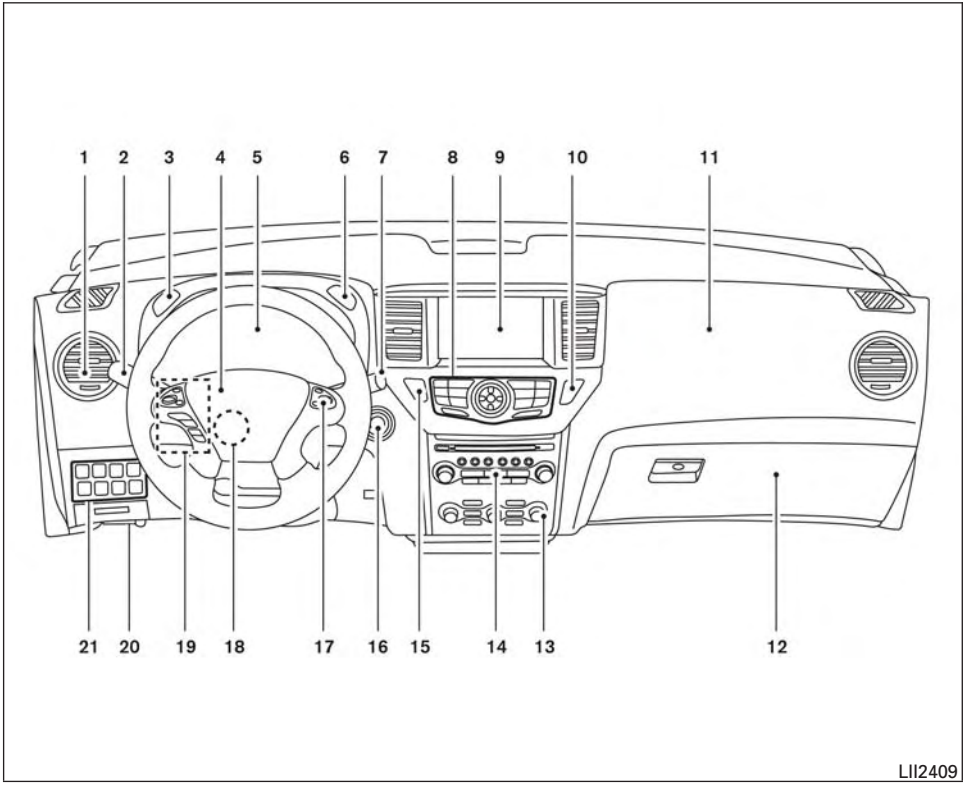

1. Vents (P. 4-46)
2. Headlight/fog light (if so equipped)/turn signal switch (P. 2-36)
3. Instrument brightness control (P. 2-36)
4. Driver supplemental air bag (P.1-49)
   Horn (P. 2-40)
5. Meters and gauges (P. 2-3)
   Warning and indicator lights (P. 2-10)
   Vehicle information display (P. 2-18)
6. Twin trip odometer reset switch (P. 2-4)
7. Wiper and washer switch (P. 2-33)
   Rear window wiper and washer switch (P. 2-33)
8. Control panel (P. 4-5)
9. Center display (P. 4-5)
   Navigation system* (if so equipped)
10. Front passenger air bag status light (P. 1-49)
11. Front passenger supplemental air bag (P. 1-49)
12. Glove box (P. 2-51)
13. Automatic heater and air conditioning controls (P. 4-47)
14. Audio system controls (P. 4-55)
15. Hazard warning flasher switch (P. 6-2)
16. Push-button ignition switch (P. 5-10)

17. Cruise control main/set switches (if so equipped) (P. 5-38)
    Intelligent Cruise Control (ICC) switches (if so equipped) (P. 5-40)
18. Tilt and telescopic steering wheel control (P. 3-31)
19. Control panel and vehicle information display switches (P. 2-19)
    Bluetooth® Hands-Free Phone System (P. 4-113)
20. Hood release (P. 3-20)
21. Vehicle Dynamic Control (VDC) OFF switch (P. 2-44)
    Tow mode switch (P. 2-46)
    Power liftgate main switch (if so equipped) (P. 3-21)
    Warning systems switch (if so equipped) (P. 2-46)
    Heated steering wheel switch (if so equipped) (P. 2-44)
    Power inverter switch (if so equipped) (P. 2-47)

*: Refer to the separate Navigation System Owner's Manual (if so equipped).

Refer to the page number indicated in parenthesis for operating details.

ENGINE COMPARTMENT CHECK LOCATIONS

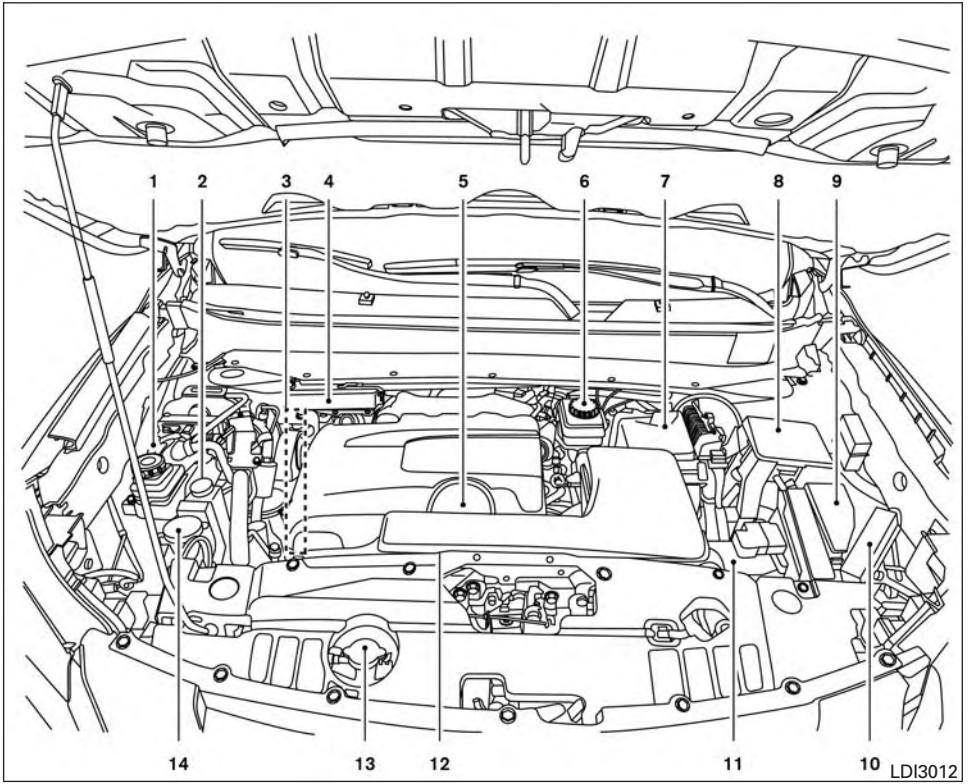

VQ35DD engine

1. Power steering fluid reservoir (P. 8-9)
2. Engine coolant reservoir (P. 8-4)
3. Drive belt location (P.8-13)
4. Fuse box (P. 8-19)
5. Engine oil filler cap (P. 8-6)
6. Brake fluid reservoir (P. 8-10)
7. Air cleaner (P. 8-15)
8. Fuse box (P. 8-19)
9. Fuse/Fusible link box (P. 8-19)
10. Fuse/Fusible link box (P. 8-19)
11. Battery (P. 8-11)
12. Engine oil dipstick (P. 8-6)
13. Radiator cap (P. 8-4)
14. Windshield-washer fluid reservoir (P. 8-11)

Refer to the page number indicated in parentheses for operating details.

WARNING AND INDICATOR LIGHTS

Warning light	Name	Page
ABS or	Anti-lock Braking System (ABS) warning light	2-11
BRAKE or	Brake warning light	2-11
	Charge warning light	2-12
	Forward Emergency Braking (FEB) system warning light (if so equipped)	2-12
	Low tire pressure warning light	2-12
	Master warning light	2-14

Warning light	Name	Page
PS	Power steering warning light	2-14
	Seat belt warning light and chime	2-14
	Supplemental air bag warning light	2-14

Indicator light	Name	Page
	Front fog light indicator light (if so equipped)	2-15
OFF	Front passenger air bag status light	2-15
	High beam indicator light (blue)	2-15
	Hill descent control system ON indicator light (if so equipped)	2-15

Indicator light	Name	Page
	Malfunction Indicator Light (MIL)	2-16
O/D OFF	Overdrive OFF indicator light	2-16
	Security indicator light	2-16
	Side light and headlight indicator light (green)	2-17
	Slip indicator light	2-17
TOW	TOW mode ON indicator light	2-17
	Turn signal/hazard indicator lights	2-17
OFF	Vehicle Dynamic Control (VDC) OFF indicator light	2-17

MEMO

1 Safety—Seats, seat belts and supplemental restraint system

Seats 1-2
Front manual seat adjustment (if so equipped) 1-3
Front power seat adjustment (if so equipped) 1-5
2nd row bench seat adjustment 1-7
3rd row bench seat adjustment 1-9
Armrests 1-10
Flexible seating 1-10
Head restraints/headrests 1-12
Adjustable head restraint/headrest components 1-13
Non-adjustable head restraint/headrest components 1-13
Remove 1-14
Removable (without Dual head restraint/headrest DVD system only) 1-14
Install 1-15
Adjust 1-15
Folding head restraint/headrest 1-16
Seat belts 1-17
Precautions on seat belt usage 1-17
Seat belt warning light 1-20
Pregnant women 1-20
Injured persons 1-20
Three-point type seat belt with retractor 1-20
Seat belt extenders 1-24
Seat belt maintenance 1-24
Child safety 1-25
Infants 1-26
Small children 1-26
Larger children 1-26
Child restraints 1-27
Precautions on child restraints 1-27
LATCH (Lower Anchors and Tethers for CHildren) system 1-29
Rear-facing child restraint installation using LATCH 1-33
Rear-facing child restraint installation using the seat belts 1-34
Forward-facing child restraint installation using LATCH 1-37
Forward-facing child restraint installation using the seat belts 1-40
Booster seats 1-46
Supplemental Restraint System (SRS) 1-49
Precautions on SRS 1-49
Supplemental air bag warning labels 1-66
Supplemental air bag warning light 1-67

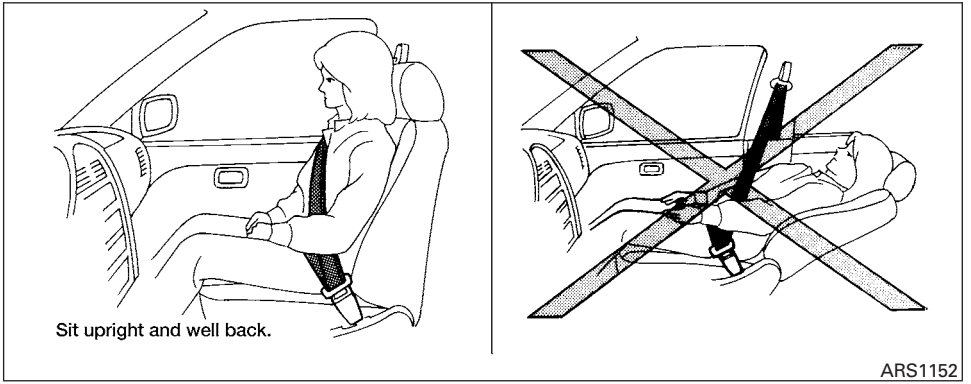

⚠WARNING

- **Do not ride in a moving vehicle when the seatback is reclined. This can be dangerous. The shoulder belt will not be against your body. In an accident, you could be thrown into it and receive neck or other serious injuries. You could also slide under the lap belt and receive serious internal injuries.**

- **For the most effective protection when the vehicle is in motion, the seat should be upright. Always sit well back and upright in the seat with both feet on the floor and adjust the seat properly. For additional information, refer to "Precautions on seat belt usage" in this section.**
- **After adjustment, gently rock in the seat to make sure it is securely locked.**

- **Do not leave children unattended inside the vehicle. They could unknowingly activate switches or controls or make the vehicle move. Unattended children could become involved in serious accidents.**
- **To help avoid risk of injury or death through unintended operation of the vehicle and/or its systems, do not leave children, people who require the assistance of others or pets unattended in your vehicle. Additionally, the temperature inside a closed vehicle on a warm day can quickly become high enough to cause a significant risk of injury or death to people and pets.**
- **Do not adjust the driver's seat while driving so full attention may be given to vehicle operation. The seat may move suddenly and could cause loss of control of the vehicle.**
- **The seatback should not be reclined any more than needed for comfort. Seat belts are most effective when the passenger sits well back and straight up in the seat. If the seatback is reclined, the risk of sliding under the lap belt and being injured is increased.**

⚠ CAUTION

When adjusting the seat positions, be sure not to contact any moving parts to avoid possible injuries and/or damage.

FRONT MANUAL SEAT ADJUSTMENT (if so equipped)

Your vehicle seats can be adjusted manually. For additional information about adjusting the seats, refer to the steps outlined in this section.

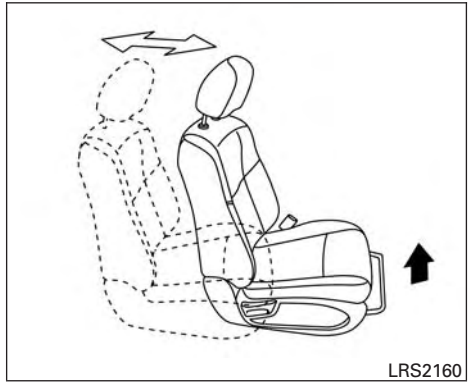

Forward and backward

Pull the center of the bar up and hold it while you slide the seat forward or backward to the desired position. Release the bar to lock the seat in position.

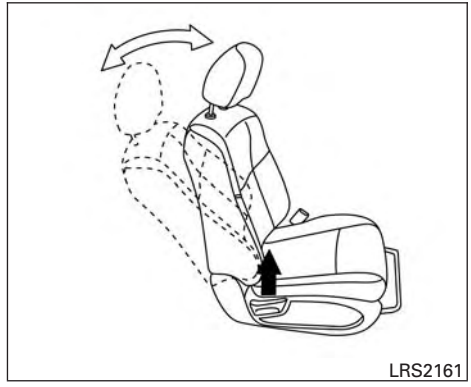

Reclining

To recline the seatback, pull the lever up and lean back. To bring the seatback forward, pull the lever up and lean your body forward. Release the lever to lock the seatback in position.

The reclining feature allows adjustment of the seatback for occupants of different sizes for added comfort and to help obtain proper seat belt fit. For additional information, refer to “Precautions on seat belt usage” in this section. Also, the seatback can be reclined to allow occupants to rest when the vehicle is stopped and the shift lever is in the P (Park) position.

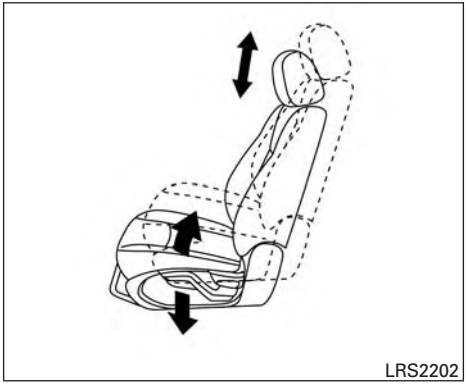

Seat lifter (driver's seat)

Pull up or push down the adjusting lever to adjust the seat height until the desired position is achieved.

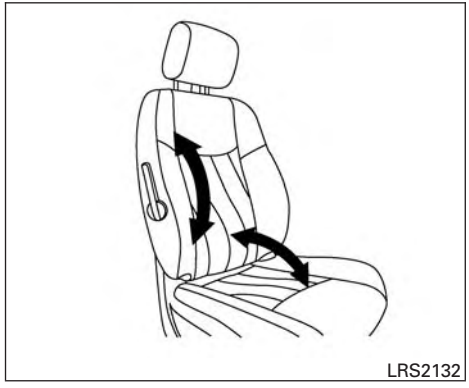

Lumbar support (driver's seat)

The lumbar support feature provides adjustable lower back support to the driver. Move the lever up or down to adjust the seat lumbar area.

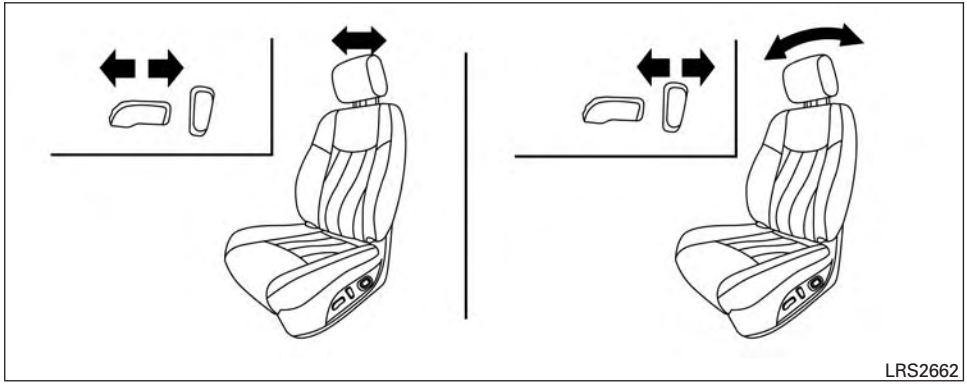

FRONT POWER SEAT ADJUSTMENT (if so equipped)

Operating tips

- The power seat motor has an auto-reset overload protection circuit. If the motor stops during operation, wait 30 seconds then reactivate the switch.
- Do not operate the power seat switch for a long period of time when the engine is off. This will discharge the battery.

For additional information, refer to “Automatic drive positioner” in the “Pre-driving checks and adjustments” section of this manual.

Forward and backward

Moving the switch as shown will slide the seat forward or backward to the desired position.

Reclining

Move the recline switch as shown until the desired angle is obtained.

The reclining feature allows adjustment of the seatback for occupants of different sizes for added comfort and to help obtain proper seat belt fit. For additional information, refer to “Precautions on seat belt usage” in this section. Also, the seatback can be reclined to allow occupants to rest when the vehicle is stopped and the shift lever is in P (Park).

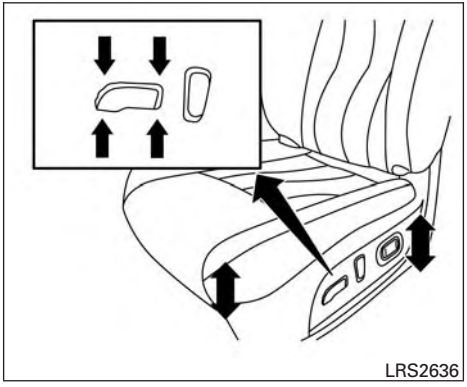

Seat lifter (driver's seat)

Move the switch as shown to adjust the angle and height of the seat cushion.

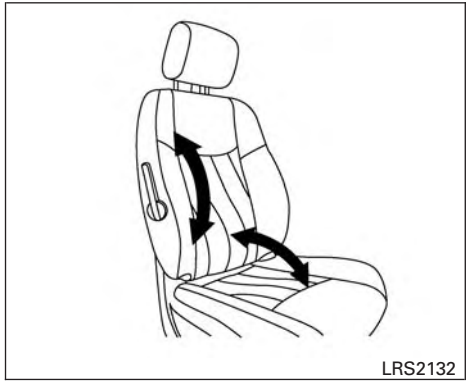

Manual (if so equipped)

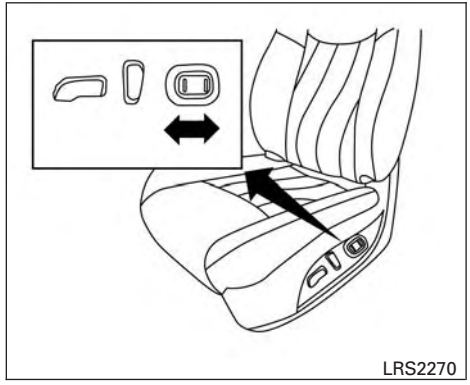

Power (if so equipped)

Lumbar support (driver's seat)

The lumbar support feature provides adjustable lower back support to the driver. Move the lever as shown (manual) or push the switch as shown (power) to adjust the seat lumbar area.

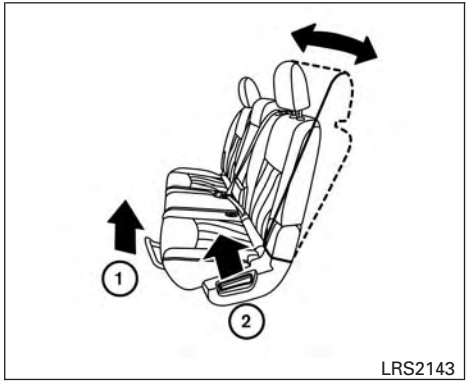

Outboard seats

2ND ROW BENCH SEAT ADJUSTMENT

Forward and backward

Pull the center of the bar ① up and hold it while you slide the seat forward or backward to the desired position. Release the bar to lock the seat in position.

Reclining

To recline the seatback, pull up on the lever ② and lean back. To bring the seatback forward, pull the lever ② up and lean your body forward. Release the lever to lock the seatback in position.

The recline feature allows adjustment of the seatback for occupants of different sizes for added comfort and to help obtain proper seat belt fit. For additional information, refer to "Precautions on seat belt usage" in this section. Also, the seatback can be reclined to allow occupants to rest when the vehicle is stopped and the shift lever is in P (Park).

⚠ WARNING

- **After adjustment, gently rock in the seat to make sure it is securely locked.**
- **Do not ride in a moving vehicle when the seatback is reclined. This can be dangerous. The shoulder belt will not be against your body. In an accident, you could be thrown into it and receive neck or other serious injuries. You could also slide under the lap belt and receive serious internal injuries.**
- **For the most effective protection when the vehicle is in motion, the seat should be upright. Always sit well back and upright in the seat and adjust the seat belt properly. For additional information, refer to "Precautions on seat belt usage" in this section.**

One touch walk-in function

The 3rd row can be accessed from outside the vehicle by using the seatback release lever located on the upper outboard side of the seatback on the 2nd row bench seat. If a child safety seat is installed on the passenger's side of the 2nd row seat, the 3rd row can be accessed without removing the child safety seat.

Multi-mode

⚠ WARNING

When returning the seat to its original position, confirm that the seat and seatback are locked properly.

⚠ CAUTION

- **Be careful not to pinch your hand or foot or bump your head when operating the walk-in seat.**
- **Do not drive with the 2nd row seat tipped up.**
- **Be careful not to allow the 2nd row seat to pinch, hit any part of your body or other people when operating the 2nd row seat. Make sure the seat path is clear of all objects before moving the seat.**

To enter the 3rd row from outside the vehicle, lift up on the seatback lever located on the upper outboard side of the seatback on the 2nd row bench seat. This will release the back of the seat and fold up the seat cushion. This will also release the seat tracks so you will be able to slide the seat forward or backward.

Slide the entire seat forward for access to the 3rd row.

To return the seat to a locked position, push the upper seatback rearward until the seatback and tracks are locked. Push the seat cushion down.

Child seat access mode

The passenger's side of the 2nd row seat can be slid forward for easy entry or exit from the 3rd row bench seat without a child safety seat being removed.

To enter the 3rd row from outside the vehicle, lift up on the seatback lever located on the upper outboard side of the seatback on the 2nd row bench seat. This will release the seatback. Then tilt the seat and release the tracks so you will be able to slide the seat forward or backward.

Slide the entire seat forward for access to the rear seats.

To return the seat to a locked position, push the upper seatback rearward until the seatback and track are locked.

⚠ WARNING

- **Do not leave a child in the child safety seat when operating the child seat access mode.**
- **When returning the seat to its original position, confirm that the seat and seatback are locked properly.**

⚠ CAUTION

- **Be careful not to pinch your hand or foot or bump your head when operating the walk-in seat.**
- **Do not drive with the 2nd row seat tipped up.**
- **Be careful not to allow the 2nd row seat to pinch, hit any part of your body or other people when operating the 2nd row seat. Make sure the seat path is clear of all objects before moving the seat.**

Exiting the 3rd row

To exit the 3rd row from either seating position, lift the upper seatback release lever to the uppermost position. This will release the back of the seat, then fold the seat cushion up and release the tracks.

Slide the entire seat forward.

To return the seat to a locked position, push the upper seatback rearward until the seatback and track are locked.

⚠ WARNING

When returning the seat to its original position, confirm that the seat and seatback are locked properly.

⚠ CAUTION

Be careful not to pinch your hand or foot or bump your head when operating the walk-in seat.

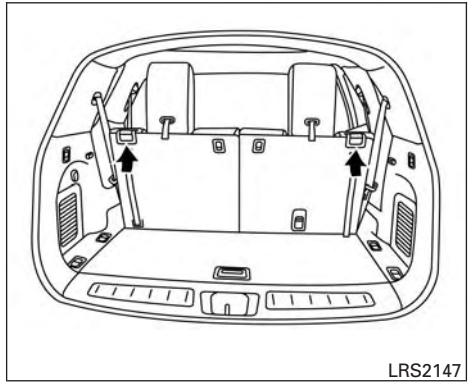

3RD ROW BENCH SEAT ADJUSTMENT

Reclining

To recline the seatback, pull up on the latch located on the outside corner of each seatback. Lean back until the desired angle is obtained.

To bring the seatback forward again, pull up on the latch and pull the seatback upright until the desired angle is obtained.

The recline feature allows adjustment of the seatback for occupants of different sizes for added comfort and to help obtain proper seat belt fit. For additional information, refer to “Precautions on seat belt usage” in this section. Also, the seatback can be reclined to allow occupants to rest when the vehicle is stopped and the shift lever is in P (Park).

⚠ WARNING

- **After adjustment, gently rock in the seat to make sure it is securely locked.**
- **Do not ride in a moving vehicle when the seatback is reclined. This can be dangerous. The shoulder belt will not be against your body. In an accident, you could be thrown into it and receive neck or other serious injuries. You could also slide under the lap belt and receive serious internal injuries.**
- **For the most effective protection when the vehicle is in motion, the seat should be upright. Always sit well back and upright in the seat and adjust the seat belt properly. For additional information, refer to “Precautions on seat belt usage” in this section.**

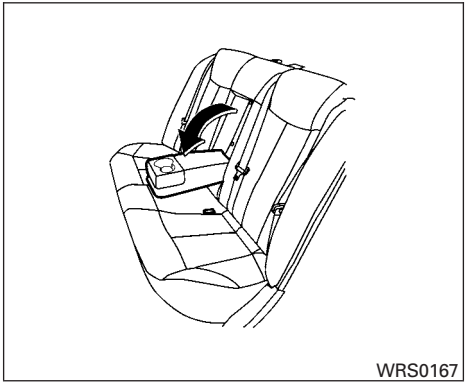

ARMRESTS

The 2nd row bench seat comes equipped with an armrest. Pull the armrest down until in resting position.

FLEXIBLE SEATING

⚠ WARNING

- **Never allow anyone to ride in the cargo area or on the rear seats when they are in the fold-down position. In a collision, people riding in these areas without proper restraints are more likely to be seriously injured or killed.**
- **Do not allow people to ride in any area of your vehicle that is not equipped with seats and seat belts. Be sure everyone in your vehicle is in a seat and using a seat belt properly.**
- **Do not allow more than one person to use the same seat belt.**
- **Do not fold down the rear seats when occupants are in the rear seat area or any luggage is on the rear seats.**
  - **Make sure that the seat path is clear before moving the seat.**
  - **Be careful not to allow hands or feet to get caught or pinched in the seat.**
- **Head restraints/headrests should be adjusted properly as they may provide significant protection against injury in an accident. Always replace and adjust them properly if they have been removed for any reason.**
- **If the head restraints/headrests are removed for any reason, they should be securely stored to prevent them from causing injury to passengers or damage to the vehicle in case of sudden braking or an accident.**
- **When returning the seatbacks to the upright position, be certain they are completely secured in the latched position. If they are not completely secured, passengers may be injured in an accident or sudden stop.**
- **Properly secure all cargo to help prevent it from sliding or shifting. Do not place cargo higher than the seatbacks. In a sudden stop or collision, unsecured cargo could cause personal injury.**

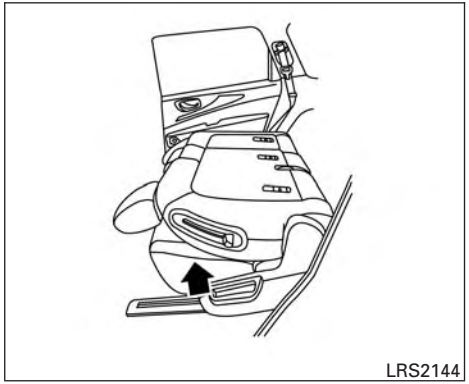

Folding the 2nd row bench seat

To fold the 2nd row bench seat flat for maximum cargo hauling:

1. Make sure that the head restraints are lowered or removed. To remove the head restraint/headrest, push and hold the lock knob while moving the head restraint/headrest in an upward direction. Store the head restraint/headrest properly so it is not loose in the vehicle.
2. Stow the 2nd row seat belts in the seat belt hooks found on the sides of the vehicle.
3. Lift up on the recline lever on the side of the outboard seats to fold the seatbacks flat.
4. To return the 2nd row bench seats to a seating position, push up on the seatback until it latches in place.

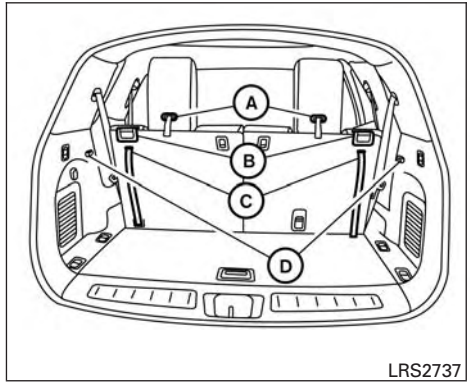

Folding the 3rd row seats

To fold the 3rd row seats flat for maximum cargo capacity:

1. Pull the strap Ⓐ to release the head restraint/headrest forward.
2. Stow the 3rd row seat belts in the seat belt hooks Ⓓ found on the sides of the cargo area.
3. Pull up on the latch Ⓑ located in the upper corner of each seatback and lower the seatback forward over the seat base.

To return the 3rd row seats to a seating position:

1. Use the pull straps Ⓒ to raise each seatback. Pull back until the seatback latches into position. **Make sure to properly raise each seatback to an upright and secured position.**
2. Do not use the pull strap to return the head restraint/headrest to the upright position. Pull back on the head restraint/headrest until it latches in the upright position.

⚠WARNING

When the seat is returned to the normal seating position, the head restraints/headrests must be returned to the upright position to properly protect vehicle occupants.

⚠WARNING

Head restraints/headrests supplement the other vehicle safety systems. They may provide additional protection against injury in certain rear end collisions. Adjustable head restraints/headrests must be adjusted properly, as specified in this section. Check the adjustment after someone else uses the seat. Do not attach anything to the head restraint/headrest stalks or remove the head restraint/headrest. Do not use the seat if the head restraint/headrest has been removed. If the head restraint/headrest was removed, reinstall and properly adjust the head restraint/headrest before an occupant uses the seating position. Failure to follow these instructions can reduce the effectiveness of the head restraints/headrests. This may increase the risk of serious injury or death in a collision.

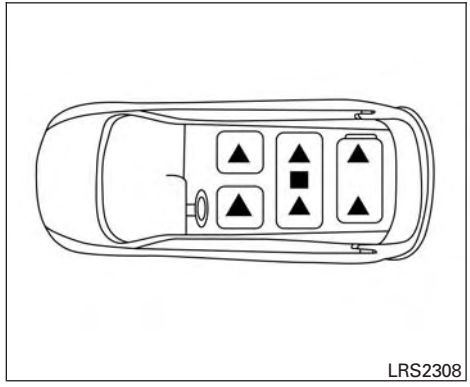

The illustration shows the seating positions equipped with head restraints/headrests.

▲ Indicates the seating position is equipped with a head restraint.

■ Indicates the seating position is equipped with a headrest.

+ Indicates the seating position is not equipped with a head restraint or headrest (if applicable).

- Your vehicle is equipped with a head restraint/headrest that may be integrated, adjustable or non-adjustable.

- Adjustable head restraints/headrests have multiple notches along the stalk(s) to lock them in a desired adjustment position.
- The non-adjustable head restraints/headrests have a single locking notch to secure them to the seat frame.
- Proper Adjustment:
  - For the adjustable type, align the head restraint/headrest so the center of your ear is approximately level with the center of the head restraint/headrest.
  - If your ear position is still higher than the recommended alignment, place the head restraint/headrest at the highest position.
- If the head restraint/headrest has been removed, ensure that it is reinstalled and locked in place before riding in that designated seating position.

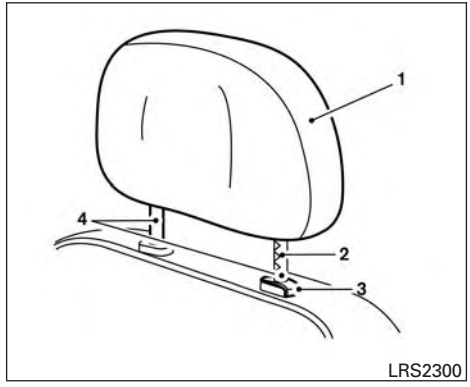

ADJUSTABLE HEAD RESTRAINT/HEADREST COMPONENTS

1. Removable head restraint/headrest
2. Multiple notches
3. Lock knob
4. Stalks

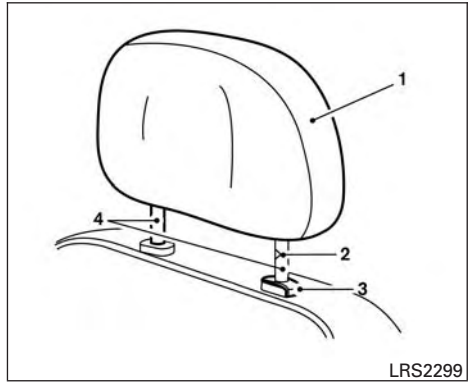

NON-ADJUSTABLE HEAD RESTRAINT/HEADREST COMPONENTS

1. Removable head restraint/headrest
2. Single notch
3. Lock knob
4. Stalks

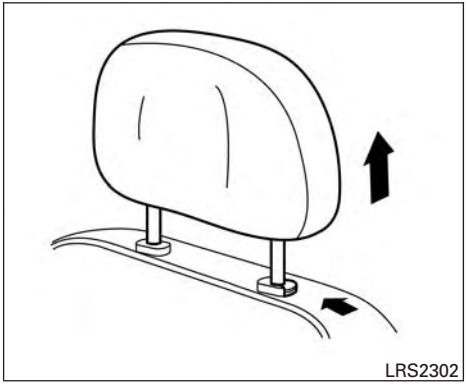

REMOVE

Use the following procedure to remove the head restraint/headrest:

1. Pull the head restraint/headrest up to the highest position.
2. Push and hold the lock knob.
3. Remove the head restraint/headrest from the seat.
4. Store the head restraint/headrest properly in a secure place so it is not loose in the vehicle.
5. Reinstall and properly adjust the head restraint/headrest before an occupant uses the seating position.

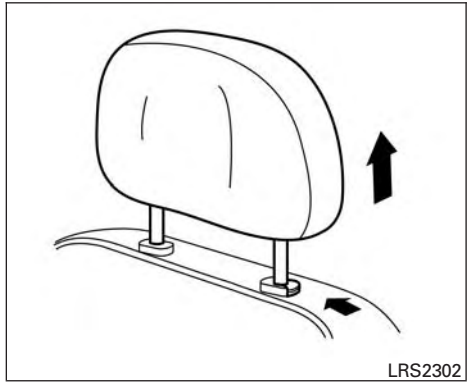

REMOVABLE (without Dual head restraint/headrest DVD system only)

⚠ CAUTION

Do not remove head restraint/headrest from vehicles equipped with Dual head restraint/headrest DVD system. Removal may damage the system wiring.

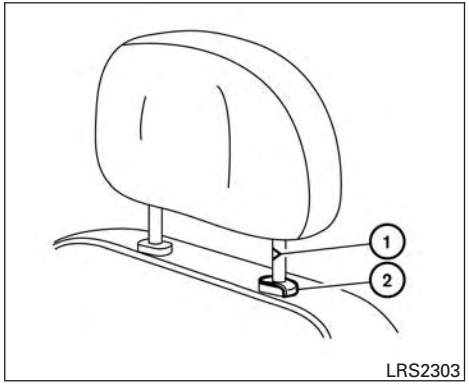

INSTALL

1. Align the head restraint/headrest stalks with the holes in the seat. Make sure that the head restraint/headrest is facing the correct direction. The stalk with the notch (notches) ① must be installed in the hole with the lock knob ②.
2. Push and hold the lock knob and push the head restraint/headrest down.
3. Properly adjust the head restraint/headrest before an occupant uses the seating position.

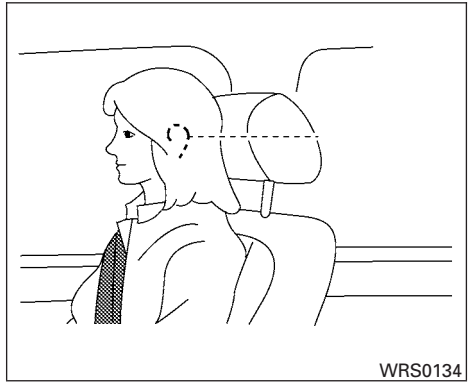

ADJUST

For adjustable head restraint/headrest

Adjust the head restraint/headrest so the center is level with the center of your ears. If your ear position is still higher than the recommended alignment, place the head restraint/headrest at the highest position.

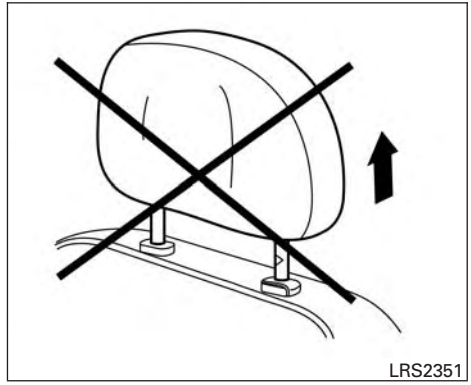

For non-adjustable head restraint/headrest

Make sure the head restraint/headrest is positioned so the lock knob is engaged in the notch before riding in that designated seating position.

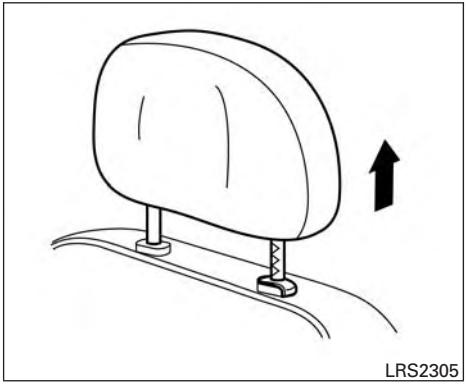

Raise

To raise the head restraint/headrest, pull it up.

Make sure the head restraint/headrest is positioned so the lock knob is engaged in the notch before riding in that designated seating position.

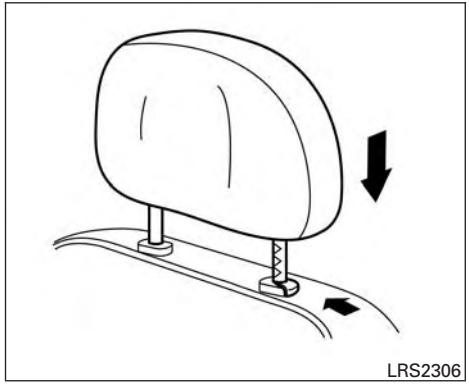

Lower

To lower, push and hold the lock knob and push the head restraint/headrest down.

Make sure the head restraint/headrest is positioned so the lock knob is engaged in the notch before riding in that designated seating position.

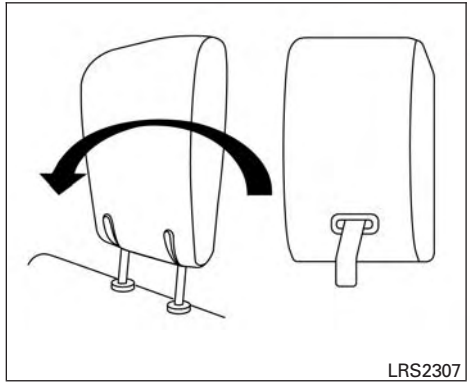

FOLDING HEAD RESTRAINT/ HEADREST

To fold the head restraint/headrest, pull the strap located on the rear of the head restraint/headrest.

If the head restraint/headrest has been folded, make sure that it is returned to the upright position.

Make sure the head restraint/headrest is positioned so the lock knobs are engaged in the notches before riding in that designated seating position.

⚠ WARNING

When the seat is returned to the normal seating position, the head restraint/headrest must be returned to the upright position to properly protect vehicle occupants.

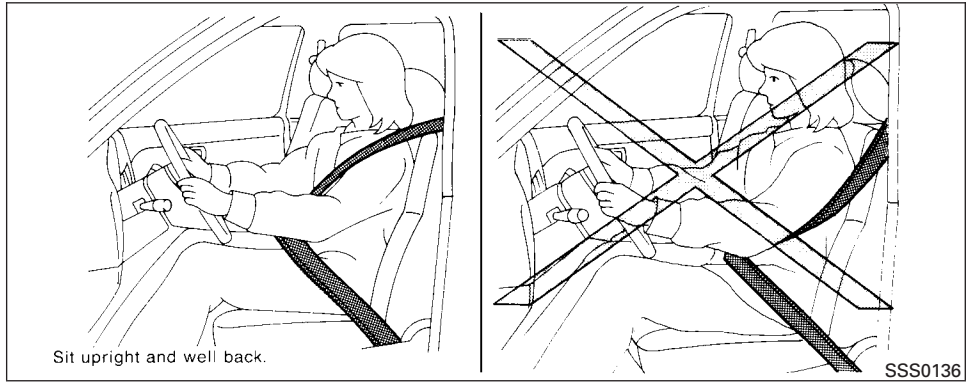

PRECAUTIONS ON SEAT BELT USAGE

If you are wearing your seat belt properly adjusted and you are sitting upright and well back in your seat with both feet on the floor, your chances of being injured or killed in a collision and/or the severity of injury may be greatly reduced. NISSAN strongly encourages you and all of your passengers to buckle up every time you drive, even if your seating position includes a supplemental air bag.

Most U.S. states and Canadian provinces or territories specify that seat belts be worn at all times when a vehicle is being driven.

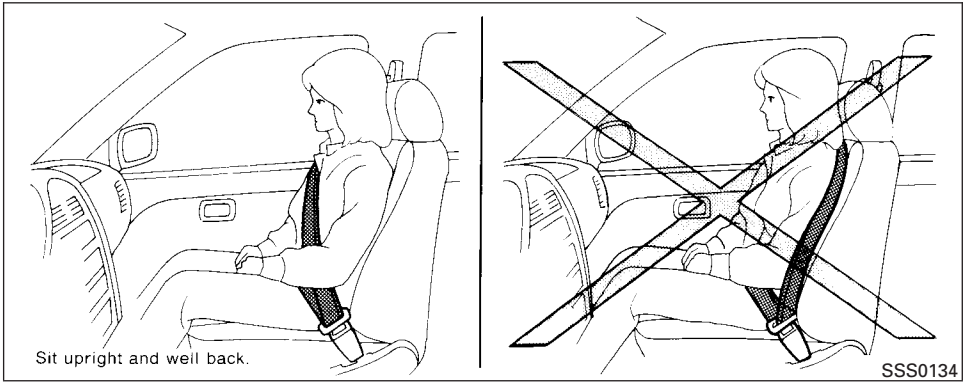

⚠ WARNING

- **Every person who drives or rides in this vehicle should use a seat belt at all times. Children should be in the rear seats and in an appropriate restraint.**

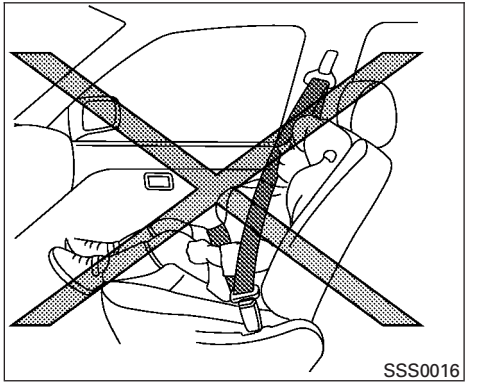

⚠ WARNING

- **The seat belt should be properly adjusted to a snug fit. Failure to do so may reduce the effectiveness of the entire restraint system and increase the chance or severity of injury in an accident. Serious injury or death can occur if the seat belt is not worn properly.**

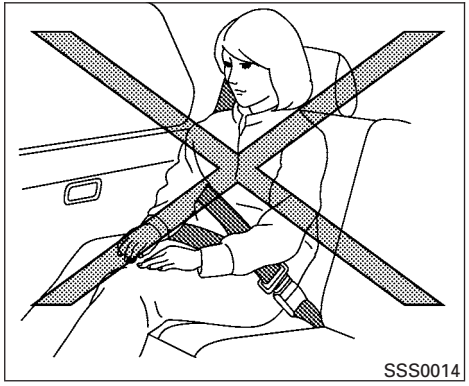

⚠ WARNING

- **Always route the shoulder belt over your shoulder and across your chest. Never put the belt behind your back, under your arm or across your neck. The belt should be away from your face and neck, but not falling off your shoulder.**
- **Position the lap belt as low and snug as possible AROUND THE HIPS, NOT THE WAIST. A lap belt worn too high could increase the risk of internal injuries in an accident.**
- **Be sure the seat belt tongue is securely fastened to the proper buckle.**
- **Do not wear the seat belt inside out or twisted. Doing so may reduce its effectiveness.**
- **Do not allow more than one person to use the same seat belt.**
- **Never carry more people in the vehicle than there are seat belts.**
- **If the seat belt warning light glows continuously while the ignition is turned ON with all doors closed and all seat belts fastened, it may indicate a malfunction in the system. Have the system checked. It is recommended that you visit a NISSAN dealer for this service.**
- **No changes should be made to the seat belt system. For example, do not modify the seat belt, add material, or install devices that may change the seat belt routing or tension. Doing so may affect the operation of the seat belt system. Modifying or tampering with the seat belt system may result in serious personal injury.**
- **Once seat belt pretensioner(s) have activated, they cannot be reused and must be replaced together with the retractor. It is recommended that you visit a NISSAN dealer for this service.**
- **All seat belt assemblies, including retractors and attaching hardware, should be inspected after any collision. It is recommended that you visit a NISSAN dealer for this service. NISSAN recommends that all seat belt assemblies in use during a collision be replaced unless the collision was minor and the belts show no damage and continue to operate properly. Seat belt assemblies not in use during a collision should also be inspected and replaced if either damage or improper operation is noted.**
- **All child restraints and attaching hardware should be inspected after any collision. Always follow the restraint manufacturer's inspection instructions and replacement recommendations. The child restraints should be replaced if they are damaged.**

SEAT BELT WARNING LIGHT

Both the driver's and passenger's front seats are equipped with a seat belt warning light. The warning light, located on the instrument panel, will show the status of the driver and passenger seat belt.

NOTE:

The front passenger seat belt warning light will not light up if the seat is not occupied.

For additional information, refer to "Warning lights, indicator lights and audible reminders" in the "Instruments and controls" section of this manual.

PREGNANT WOMEN

NISSAN recommends that pregnant women use seat belts. The seat belt should be worn snug and always position the lap belt as low as possible around the hips, not the waist. Place the shoulder belt over your shoulder and across your chest. Never run the lap/shoulder belt over your abdominal area. Contact your doctor for specific recommendations.

INJURED PERSONS

NISSAN recommends that injured persons use seat belts. Check with your doctor for specific recommendations.

THREE-POINT TYPE SEAT BELT WITH RETRACTOR

⚠ WARNING

- **Every person who drives or rides in this vehicle should use a seat belt at all times. Children should be in the rear seats and in an appropriate restraint.**
- **Do not ride in a moving vehicle when the seatback is reclined. This can be dangerous. The shoulder belt will not be against your body. In an accident, you could be thrown into it and receive neck or other serious injuries. You could also slide under the lap belt and receive serious internal injuries.**
- **For the most effective protection when the vehicle is in motion, the seat should be upright. Always sit well back and upright in the seat with both feet on the floor and adjust the seat belt properly.**
- **Do not allow children to play with the seat belts. Most seating positions are equipped with Automatic Locking Retractor (ALR) mode seat belts. If the seat belt becomes wrapped around a child's neck with the ALR mode activated, the child can be seriously injured or killed if the seat belt retracts and becomes tight. This can occur even if the vehicle is parked. Unbuckle the seat belt to release the child. If the seat belt cannot be unbuckled or is already unbuckled, release the child by cutting the seat belt with a suitable tool (such as a knife or scissors) to release the seat belt.**

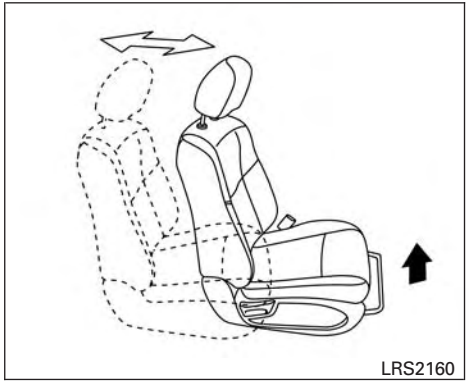

Manual front seat shown (if so equipped)

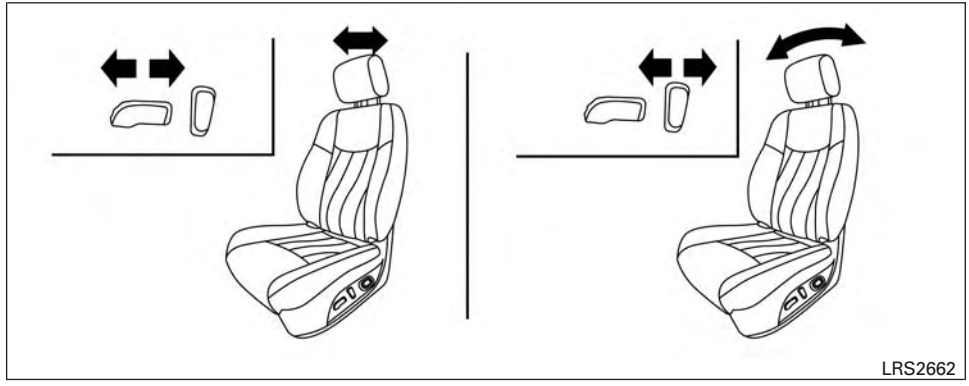

Power front seat shown (if so equipped)

Fastening the seat belts

1. Adjust the seat. For additional information, refer to “Seats” in this section.

LRS2674

2. Slowly pull the seat belt out of the retractor and insert the tongue into the buckle Ⓐ until you hear and feel the latch engage.
   - **The retractor is designed to lock during a sudden stop or on impact. A slow pulling motion permits the seat belt to move and allows you some freedom of movement in the seat.**
   - **If the seat belt cannot be pulled from its fully retracted position, firmly pull the belt and release it. Then smoothly pull the belt out of the retractor.**

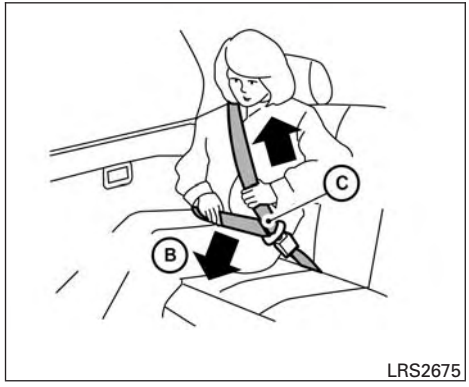

LRS2675

3. Position the lap belt portion **low and snug on the hips** Ⓑ as shown.
4. Pull the shoulder belt portion toward the retractor to take up extra slack Ⓒ. Be sure the shoulder belt is routed over your shoulder and across your chest.

The front passenger seat and the rear seating positions' three-point seat belts have two modes of operation:

- Emergency Locking Retractor (ELR)
- Automatic Locking Retractor (ALR)

The ELR mode allows the seat belt to extend and retract to allow the driver and passengers some freedom of movement in the seat. The ELR locks the seat belt when the vehicle slows down rapidly or during certain impacts.

The ALR mode (child restraint mode) locks the seat belt for child restraint installation.

When the ALR mode is activated, the seat belt cannot be extended again until the seat belt tongue is detached from the buckle and fully retracted. The seat belt returns to the ELR mode after the seat belt fully retracts. For additional information, refer to "Child restraints" in this section.

The ALR mode should be used only for child restraint installation. During normal seat belt use by an occupant, the ALR mode should not be activated. If it is activated, it may cause uncomfortable seat belt tension. It can also change the operation of the front passenger air bag. For additional information, refer to "Front passenger air bag and status light" in this section.

⚠ WARNING

When fastening the seat belts, be certain that the seatbacks are completely secured in the latched position. If they are not completely secured, passengers may be injured in an accident or sudden stop.

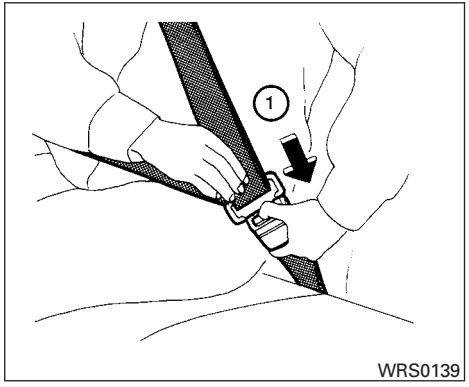

Unfastening the seat belts

To unfasten the seat belt, press the button on the buckle ①. The seat belt automatically retracts.

Checking seat belt operation

Seat belt retractors are designed to lock seat belt movement by two separate methods:

- When the seat belt is pulled quickly from the retractor
- When the vehicle slows down rapidly

To increase your confidence in the seat belts, check the operation as follows:

- Grasp the shoulder belt and pull forward quickly. The retractor should lock and restrict further belt movement.

If the retractor does not lock during this check, get the system checked. It is recommended that you visit a NISSAN dealer for this service, or to learn more about seat belt operation.

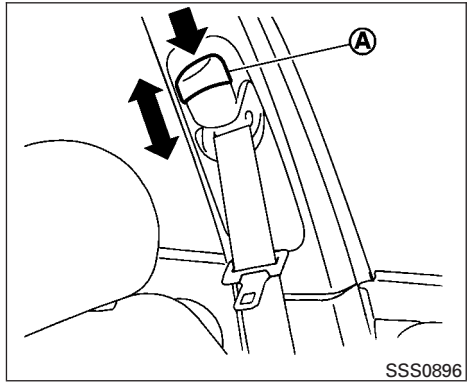

Ⓐ Shoulder belt height adjust button

Shoulder belt height adjustment (front and 2nd row outboard seats)

The shoulder belt anchor height should be adjusted to the position best for you. For additional information, refer to “Precautions on seat belt usage” in this section.

To adjust, push the button and then move the shoulder belt anchor to the desired position so that the belt passes over the center of the shoulder. The belt should be away from your face and

neck, but not falling off of your shoulder. Release the adjustment button to lock the shoulder belt anchor into position.

⚠ WARNING

- **After adjustment, release the adjustment button and try to move the shoulder belt anchor up and down to make sure it is securely fixed in position.**
- **The shoulder belt anchor height should be adjusted to the position best for you. Failure to do so may reduce the effectiveness of the entire restraint system and increase the chance or severity of injury in an accident.**
- **The shoulder belt should rest on the middle of the shoulder. It must not rest against the neck.**
- **Be sure that the seat belt is not twisted in any way.**
- **Be sure that the shoulder belt anchor is secured by trying to move the shoulder belt anchor up and down after adjustment.**

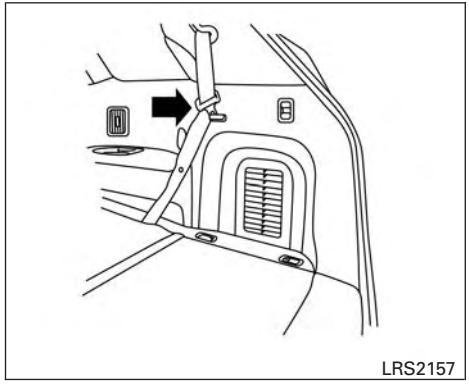

3rd row shown; 2nd row similar

Seat belt hook

When the seat belt is not in use and when folding down the rear seats, hook the rear seat belts on the seat belt hooks.

SEAT BELT EXTENDERS

If, because of body size or driving position, it is not possible to properly fit the lap/shoulder belt and fasten it, an extender that is compatible with the installed seat belts is available for purchase. The extender adds approximately 8 in (200 mm) of length and are available for the:

- Driver and front passenger seating position
- 2nd and 3rd row seating position

It is recommended that you visit a NISSAN dealer for assistance with purchasing an extender if an extender is required.

⚠ WARNING

- **Only NISSAN seat belt extenders, made by the same company which made the original equipment seat belts, should be used with NISSAN seat belts.**
- **Adults and children who can use the standard seat belt should not use an extender. Such unnecessary use could result in serious personal injury in the event of an accident.**
- **Never use seat belt extenders to install child restraints. If the child restraint is not secured properly, the child could be seriously injured or killed in a collision or a sudden stop.**

SEAT BELT MAINTENANCE

- **To clean the seat belt webbing,** apply a mild soap solution or any solution recommended for cleaning upholstery or carpet. Then wipe with a cloth and allow the seat belts to dry in the shade. Do not allow the seat belts to retract until they are completely dry.

- **If dirt builds up in the shoulder belt guide of the seat belt anchors,** the seat belts may retract slowly. Wipe the shoulder belt guide with a clean, dry cloth.
- **Periodically check to see that the seat belt and the metal components,** such as buckles, tongues, retractors, flexible wires and anchors, work properly. If loose parts, deterioration, cuts or other damage on the webbing is found, the entire seat belt assembly should be replaced.

WARNING

Do not allow children to play with the seat belts. Most seating positions are equipped with Automatic Locking Retractor (ALR) mode seat belts. If the seat belt becomes wrapped around a child's neck with the ALR mode activated, the child can be seriously injured or killed if the seat belt retracts and becomes tight. This can occur even if the vehicle is parked. Unbuckle the seat belt to release the child. If the seat belt cannot be unbuckled or is already unbuckled, release the child by cutting the seat belt with a suitable tool (such as a knife or scissors) to release the seat belt.

Children need adults to help protect them. They need to be properly restrained.

In addition to the general information in this manual, child safety information is available from many other sources, including doctors, teachers, government traffic safety offices, and community organizations. Every child is different, so be sure to learn the best way to transport your child.

There are three basic types of child restraint systems:

- Rear-facing child restraints
- Forward-facing child restraints
- Booster seats

The proper restraint depends on the child's size. Generally, infants up to about 1 year and less than 20 lbs (9 kg) should be placed in rear-facing child restraints. Forward-facing child restraints are available for children who outgrow rear-facing child restraints and are at least 1 year old. Booster seats are used to help position a vehicle lap/shoulder belt on a child who can no longer use a forward-facing child restraint.

WARNING

Infants and children need special protection. The vehicle's seat belts may not fit them properly. The shoulder belt may come too close to the face or neck. The lap belt may not fit over their small hip bones. In an accident, an improperly fitting seat belt could cause serious or fatal injury. Always use appropriate child restraints.

All U.S. states and Canadian provinces or territories require the use of approved child restraints for infants and small children. For additional information, refer to "Child restraints" in this section.

A child restraint may be secured in the vehicle by using either the LATCH (Lower Anchors and Tethers for CHildren) system or with the vehicle seat belt. For additional information, refer to “Child restraints” in this section.

NISSAN recommends that all pre-teens and children be restrained in the rear seat. Studies show that children are safer when properly restrained in the rear seat than in the front seat.

This is especially important because your vehicle has a supplemental restraint system (air bag system) for the front passenger. For additional information, refer to “Supplemental Restraint System (SRS)” in this section.

INFANTS

Infants up to at least 1 year old should be placed in a rear-facing child restraint. NISSAN recommends that infants be placed in child restraints that comply with Federal Motor Vehicle Safety Standards or Canadian Motor Vehicle Safety Standards. You should choose a child restraint that fits your vehicle and always follow the manufacturer’s instructions for installation and use.

SMALL CHILDREN

Children that are over 1 year old and weigh at least 20 lbs (9 kg) should remain in a rear-facing child restraint as long as possible up to the height or weight limit of the child restraint. Children who outgrow the height or weight limit of the rear-facing child restraint and are at least 1 year old should be secured in a forward-facing child restraint with a harness. Refer to the manufacturer’s instructions for minimum and maximum weight and height recommendations. NISSAN recommends that small children be placed in child restraints that comply with Federal Motor Vehicle Safety Standards or Canadian Motor Vehicle Safety Standards. You should choose a child restraint that fits your vehicle and always follow the manufacturer’s instructions for installation and use.

LARGER CHILDREN

Children should remain in a forward-facing child restraint with a harness until they reach the maximum height or weight limit allowed by the child restraint manufacturer.

Once a child outgrows the height or weight limit of the harness-equipped forward-facing child restraint, NISSAN recommends that the child be placed in a commercially available booster seat to obtain proper seat belt fit. For a seat belt to fit properly, the booster seat should raise the child so that the shoulder belt is properly positioned across the chest and the top, middle portion of the shoulder. The shoulder belt should not cross the neck or face and should not fall off the shoulder. The lap belt should lie snugly across the lower hips or upper thighs, not the abdomen. A booster seat can only be used in seating positions that have a three-point type seat belt. The booster seat should fit the vehicle seat and have a label certifying that it complies with Federal Motor Vehicle Safety Standards or Canadian Motor Vehicle Safety Standards.

A booster seat should be used until the child can pass the seat belt fit test below:

- Are the child’s back and hips against the vehicle seatback?
- Is the child able to sit without slouching?
- Do the child’s knees bend easily over the front edge of the seat with feet flat on the floor?
- Can the child safely wear the seat belt (lap belt low and snug across the hips and shoulder belt across mid-chest and shoulder)?
- Is the child able to use the properly adjusted head restraint/headrest?
- Will the child be able to stay in position for the entire ride?

LRS2690

If you answered no to any of these questions, the child should remain in a booster seat using a three-point type seat belt.

NOTE:

Laws in some communities may follow different guidelines. Check local and state regulations to confirm your child is using the correct restraint system before traveling.

⚠ WARNING

Never let a child stand or kneel on any seat and do not allow a child in the cargo area. The child could be seriously injured or killed in a sudden stop or collision.

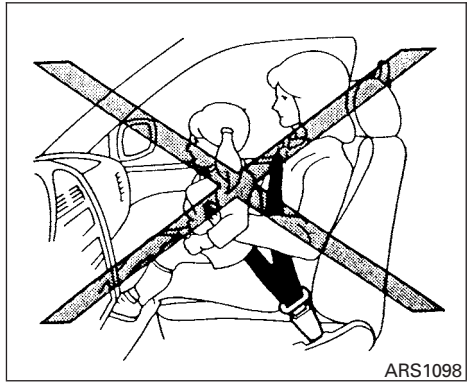
ARS1098

PRECAUTIONS ON CHILD RESTRAINTS

⚠ WARNING

- **Failure to follow the warnings and instructions for proper use and installation of child restraints could result in serious injury or death of a child or other passengers in a sudden stop or collision:**
  - **The child restraint must be used and installed properly. Always follow all of the child restraint manufacturer's instructions for installation and use.**

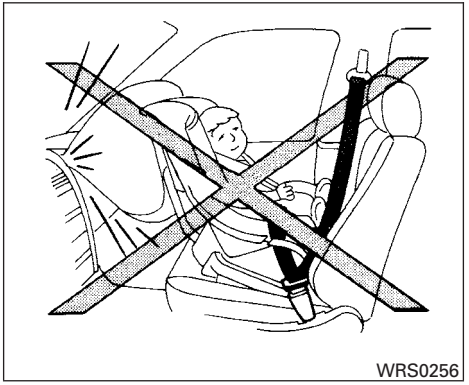
WRS0256

- **Infants and children should never be held on anyone's lap. Even the strongest adult cannot resist the forces of a collision.**
- **Do not put a seat belt around both a child and another passenger.**
- **NISSAN recommends that all child restraints be installed in the rear seat. Studies show that children are safer when properly restrained in the rear seat than in the front seat. If you must install a forward-facing child restraint in the front seat, refer to "Forward-facing child restraint installation using the seat belts" in this section.**
- **Even with the NISSAN Advanced Air Bag System, never install a rear-facing child restraint in the front seat. An inflating air bag could seriously injure or kill a child. A rear-facing child restraint must only be used in the rear seat.**
- **Be sure to purchase a child restraint that will fit the child and vehicle. Some child restraints may not fit properly in your vehicle.**
- **Child restraint anchorages are designed to withstand only those loads imposed by correctly fitted child restraints. Under no circumstances are they to be used to attach adult seat belts, or other items or equipment to the vehicle. Doing so could damage the child restraint anchorages. The child restraint will not be properly installed using the damaged anchorage, and a child could be seriously injured or killed in a collision.**
- **Never use the anchor points for adult seat belts or harnesses.**
- **A child restraint with a top tether strap should not be used in the front passenger seat.**
- **Keep seatbacks as upright as possible after fitting the child restraint.**
- **Infants and children should always be placed in an appropriate child restraint while in the vehicle.**

- **When the child restraint is not in use, keep it secured with the LATCH system or a seat belt. In a sudden stop or collision, loose objects can injure occupants or damage the vehicle.**

⚠ CAUTION

A child restraint in a closed vehicle can become very hot. Check the seating surface and buckles before placing a child in the child restraint.

This vehicle is equipped with a universal child restraint anchor system, referred to as the LATCH (Lower Anchors and Tethers for CHildren) system. Some child restraints include rigid or webbing-mounted attachments that can be connected to these anchors. For additional information, refer to "LATCH (Lower Anchors and Tethers for CHildren) system" in this section.

If you do not have a LATCH compatible child restraint, the vehicle seat belts can be used.

Several manufacturers offer child restraints for infants and children of various sizes. When selecting any child restraint, keep the following points in mind:

- Choose only a restraint with a label certifying that it complies with Federal Motor Vehicle Safety Standard 213 or Canadian Motor Vehicle Safety Standard 213.
- Check the child restraint in your vehicle to be sure it is compatible with the vehicle's seat and seat belt system.
- If the child restraint is compatible with your vehicle, place your child in the child restraint and check the various adjustments to be sure the child restraint is compatible with your child. Choose a child restraint that is designed for your child's height and weight. Always follow all recommended procedures.
- If the combined weight of the child and child restraint is less than 65 lbs (29.5 kg), you may use either the LATCH anchors or the seat belt to install the child restraint (not both at the same time).
- If the combined weight of the child and child restraint is greater than 65 lbs (29.5 kg), use the vehicle's seat belt (not the lower anchors) to install the child restraint.
- Be sure to follow the child restraint manufacturer's instructions for installation.

All U.S. states and Canadian provinces or territories require that infants and small children be restrained in an approved child restraint at all times while the vehicle is being operated. Canadian law requires the top tether strap on forward-facing child restraints be secured to the designated anchor point on the vehicle.

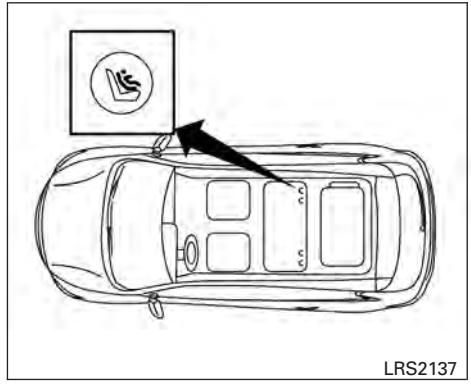

LATCH system lower anchor locations - bench seat

LATCH (Lower Anchors and Tethers for CHildren) SYSTEM

Your vehicle is equipped with special anchor points that are used with LATCH system compatible child restraints. This system may also be referred to as the ISOFIX or ISOFIX compatible system. With this system, you do not have to use a vehicle seat belt to secure the child restraint unless the combined weight of the child and child restraint exceeds 65 lbs (29.5 kg). If the combined weight of the child and child restraint is greater than 65 lbs (29.5 kg), use the vehicle's seat belt (not the lower anchors) to install the

child restraint. Be sure to follow the child restraint manufacturer's instructions for installation.

The LATCH lower anchor points are provided to install child restraints in the following positions only:

- 2nd row bench seat – outboard seating positions

LATCH lower anchor

⚠WARNING

Failure to follow the warnings and instructions for proper use and installation of child restraints could result in serious injury or death of a child or other passengers in a sudden stop or collision:

- **Attach LATCH system compatible child restraints only at the locations shown in the illustration.**
- **Do not secure a child restraint in the 2nd row center position using the LATCH system anchors. The child restraint will not be secured properly.**
- **Inspect the lower anchors by inserting your fingers into the lower anchor area. Feel to make sure there are no obstructions over the anchors such as seat belt webbing or seat cushion material. The child restraint will not be secured properly if the lower anchors are obstructed.**
- **Child restraint anchorages are designed to withstand only those loads imposed by correctly fitted child restraints. Under no circumstances are they to be used to attach adult seat belts, or other items or equipment to the vehicle. Doing so could damage the child restraint anchorages. The child restraint will not be properly installed using the damaged anchorages, and a child could be seriously injured or killed in a collision.**

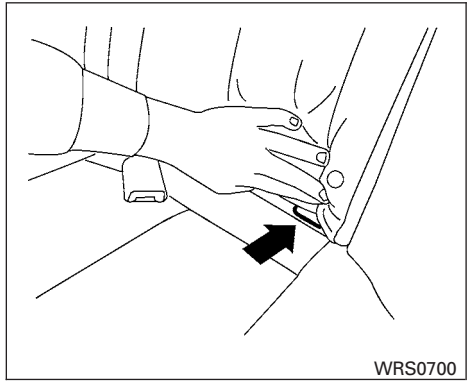

LATCH lower anchor location

LATCH lower anchor location

The LATCH lower anchors are located as shown. A label is attached to the seatback to help you locate the LATCH lower anchors.

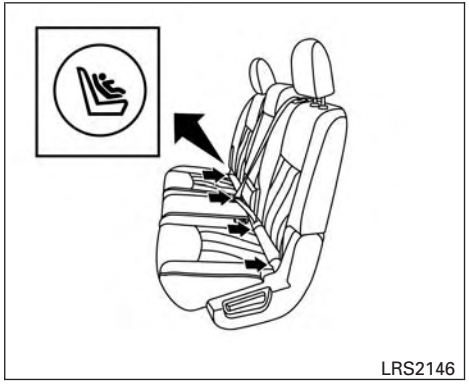

LATCH label locations 2nd row bench

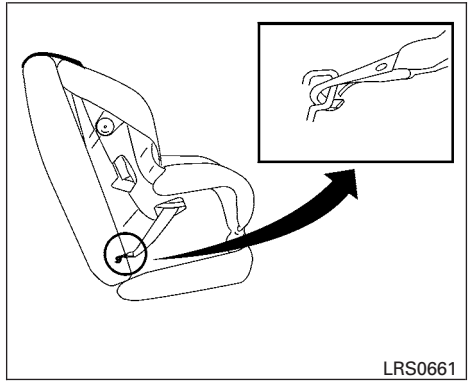

LATCH webbing-mounted attachment

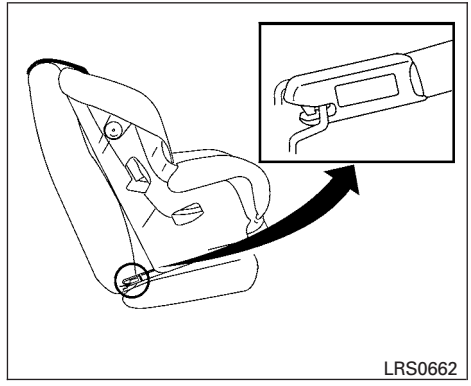

LATCH rigid-mounted attachment

Installing child restraint LATCH lower anchor attachments

LATCH compatible child restraints include two rigid or webbing-mounted attachments that can be connected to two anchors located at certain seating positions in your vehicle. With this system, you do not have to use a vehicle seat belt to secure the child restraint. Check your child restraint for a label stating that it is compatible with LATCH. This information may also be in the instructions provided by the child restraint manufacturer.

When installing a child restraint, carefully read and follow the instructions in this manual and those supplied with the child restraint.

Top tether anchor

⚠WARNING

- **Do not allow cargo to contact the top tether strap when it is attached to the top tether anchor. Properly secure the cargo so it does not contact the top tether strap. Cargo that is not properly secured or cargo that contacts the top tether strap may damage it during a collision. A child could be seriously injured or killed in a collision if the top tether strap is damaged.**
- **Child restraint anchorages are designed to withstand only those loads imposed by correctly fitted child restraints. Under no circumstances are they to be used to attach adult seat belts, or other items or equipment to the vehicle. Doing so could damage the child restraint anchorages. The child restraint will not be properly installed using the damaged anchorages, and a child could be seriously injured or killed in a collision.**

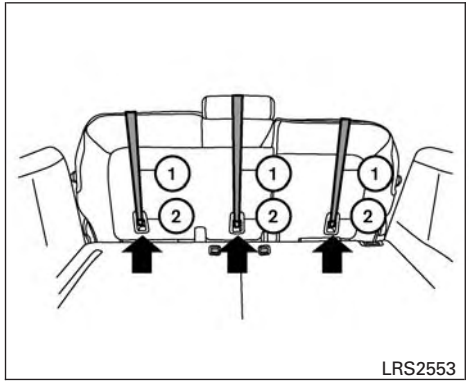

2nd row bench seat

① Top tether strap

② Anchor point

Top tether anchor point locations

Anchor points are located in the following locations:

- 2nd row bench on the bottom of the seatback in the seating positions shown.
- 3rd row bench on the bottom of the seatback on the passenger side seating position as shown.

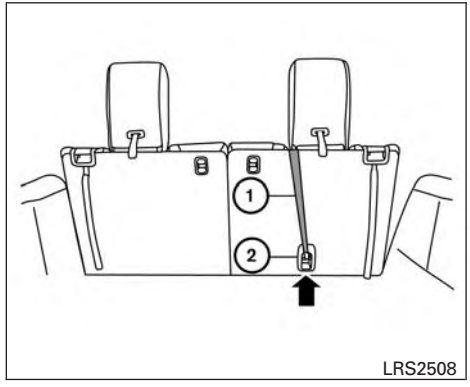

3rd row bench seat

If you have any questions when installing a top tether strap, it is recommended that you visit a NISSAN dealer for this service.

REAR-FACING CHILD RESTRAINT INSTALLATION USING LATCH

For additional information, refer to all Warnings and Cautions in the “Child safety” and “Child restraints” sections of this manual before installing a child restraint.

Do not use the lower anchors if the combined weight of the child and the child restraint exceeds 65 lbs (29.5 kg). If the combined weight of the child and the child restraint is greater than 65 lbs (29.5 kg), use the vehicle’s seat belt (not the lower anchors) to install the child restraint. Be sure to follow the child restraint manufacturer’s instructions for installation.

Follow these steps to install a rear-facing child restraint in the 2nd row seats using the LATCH system:

1. Position the child restraint on the seat. Always follow the child restraint manufacturer’s instructions.

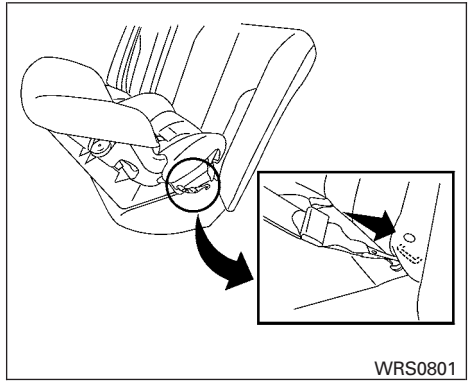

Rear-facing webbing-mounted – step 2

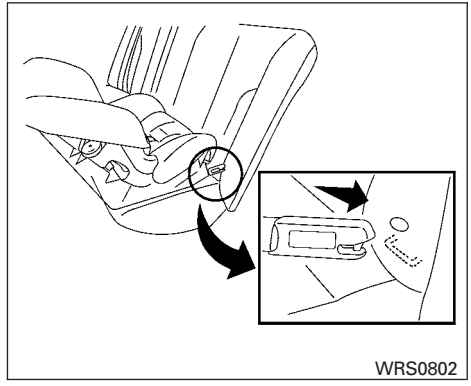

Rear-facing rigid-mounted – step 2

2. Secure the child restraint anchor attachments to the LATCH lower anchors. Check to make sure the LATCH attachment is properly attached to the lower anchors.

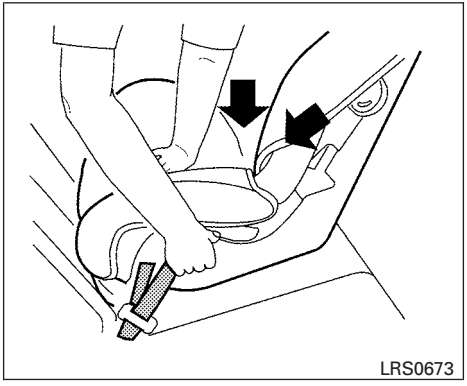

Rear-facing – step 3

3. For child restraints that are equipped with webbing-mounted attachments, remove any additional slack from the anchor attachments. Press downward and rearward firmly in the center of the child restraint with your hand to compress the vehicle seat cushion and seatback while tightening the webbing of the anchor attachments.

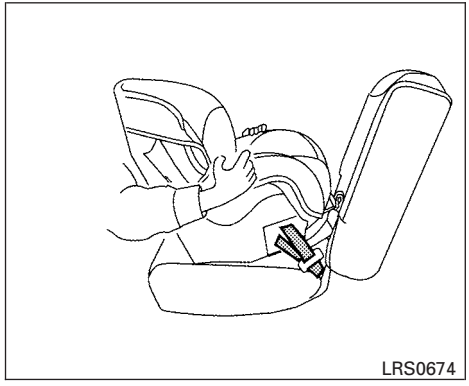

Rear-facing – step 4

4. After attaching the child restraint, test it before you place the child in it. Push it from side to side while holding the child restraint near the LATCH attachment path. The child restraint should not move more than 1 inch (25 mm), from side to side. Try to tug it forward and check to see if the LATCH attachment holds the restraint in place. If the restraint is not secure, tighten the LATCH attachment as necessary, or put the restraint in another seat and test it again. You may need to try a different child restraint or try installing by using the vehicle seat belt (if applicable). Not all child restraints fit in all types of vehicles.
5. Check to make sure the child restraint is properly secured prior to each use. If the child restraint is loose, repeat steps 1 through 4.

REAR-FACING CHILD RESTRAINT INSTALLATION USING THE SEAT BELTS

⚠ WARNING

The three-point seat belt with Automatic Locking Retractor (ALR) must be used when installing a child restraint. Failure to use the ALR mode will result in the child restraint not being properly secured. The restraint could tip over or be loose and cause injury to a child in a sudden stop or collision.

For additional information, refer to all Warnings and Cautions in the “Child safety” and “Child restraints” sections of this manual before installing a child restraint.

Do not use the lower anchors if the combined weight of the child and the child restraint exceeds 65 lbs (29.5 kg). If the combined weight of the child and the child restraint is greater than 65 lbs (29.5 kg), use the vehicle’s seat belt (not the lower anchors) to install the child restraint. Be sure to follow the child restraint manufacturer’s instructions for installation.

Follow these steps to install a rear-facing child restraint using the vehicle seat belts in the rear seats:

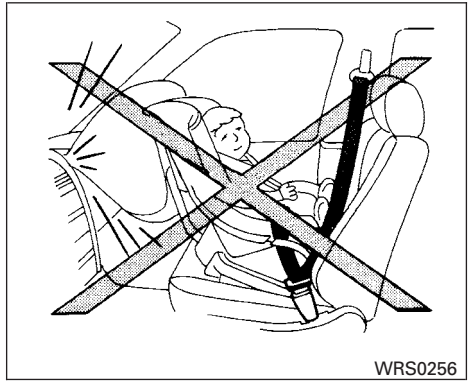

Rear-facing – step 1

1. **Child restraints for infants must be used in the rear-facing direction and therefore must not be used in the front seat.** Position the child restraint on the seat. Always follow the child restraint manufacturer's instructions.

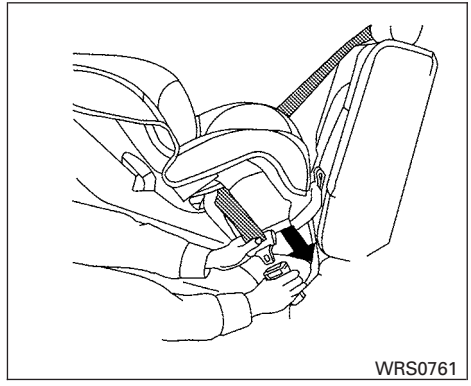

Rear-facing – step 2

2. Route the seat belt tongue through the child restraint and insert it into the buckle until you hear and feel the latch engage. Be sure to follow the child restraint manufacturer's instructions for belt routing.

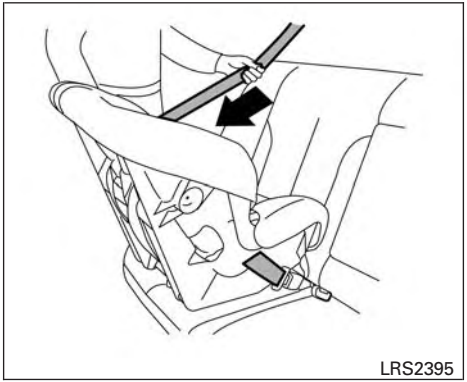

Rear-facing – step 3

3. Pull the shoulder belt until the belt is fully extended. At this time, the seat belt retractor is in the ALR mode (child restraint mode). It reverts to the ELR mode when the seat belt is fully retracted.

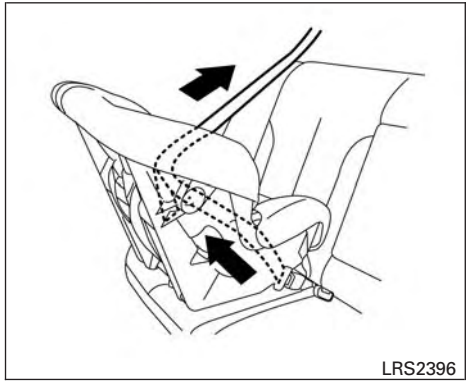

Rear-facing – step 4

4. Allow the seat belt to retract. Pull up on the shoulder belt to remove any slack in the belt.

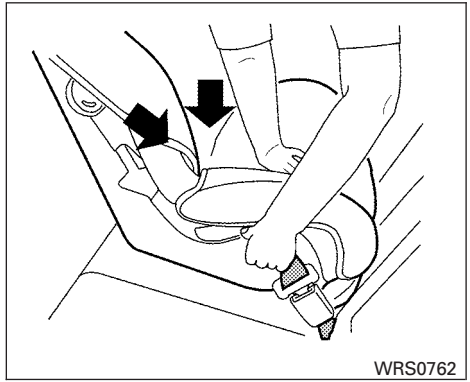

Rear-facing – step 5

5. Remove any additional slack from the seat belt; press downward and rearward firmly in the center of the child restraint to compress the vehicle seat cushion and seatback while pulling up on the seat belt.

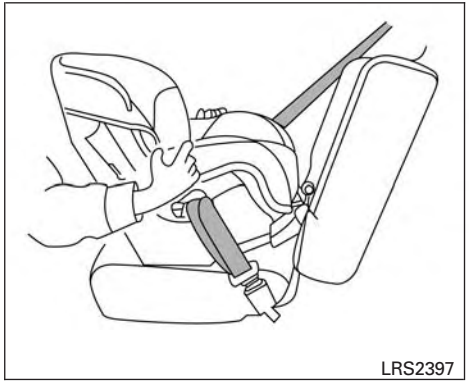

Rear-facing – step 6

6. After attaching the child restraint, test it before you place the child in it. Push it from side to side while holding the child restraint near the seat belt path. The child restraint should not move more than 1 inch (25 mm), from side to side. Try to tug it forward and check to see if the belt holds the restraint in place. If the restraint is not secure, tighten the seat belt as necessary, or put the restraint in another seat and test it again. You may need to try a different child restraint. Not all child restraints fit in all types of vehicles.
7. Check to make sure that the child restraint is properly secured prior to each use. If the seat belt is not locked, repeat steps 1 through 6.

After the child restraint is removed and the seat belt fully retracted, the ALR mode (child restraint mode) is canceled.

FORWARD-FACING CHILD RESTRAINT INSTALLATION USING LATCH

For additional information, refer to all Warnings and Cautions in the “Child safety” and “Child restraints” sections of this manual before installing a child restraint.

Do not use the lower anchors if the combined weight of the child and the child restraint exceeds 65 lbs (29.5 kg). If the combined weight of the child and the child restraint is greater than 65 lbs (29.5 kg), use the vehicle’s seat belt (not the lower anchors) to install the child restraint. Be sure to follow the child restraint manufacturer’s instructions for installation.

Follow these steps to install a forward-facing child restraint in the 2nd row seats using the LATCH system:

1. Position the child restraint on the seat. Always follow the child restraint manufacturer’s instructions.

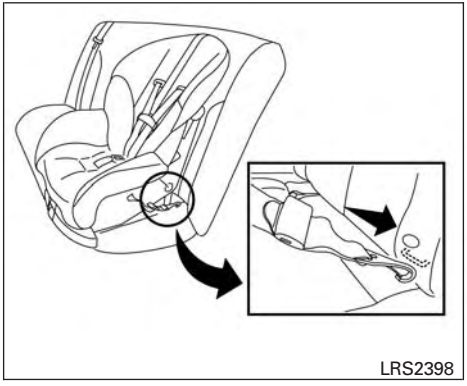

Forward-facing webbing-mounted – step 2

2. Secure the child restraint anchor attachments to the LATCH lower anchors. Check to make sure the LATCH attachment is properly attached to the lower anchors.

   If the child restraint is equipped with a top tether strap, route the top tether strap and secure the tether strap to the tether anchor point. For additional information, refer to “Installing top tether strap” in this section.

   Do not install child restraints that require the use of a top tether strap in seating positions that do not have a top tether anchor.

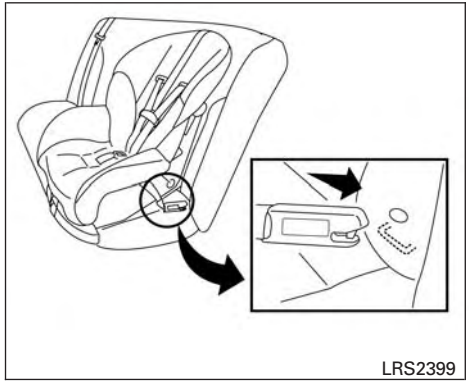

Forward-facing rigid-mounted – step 2

3. The back of the child restraint should be secured against the vehicle seatback.

   If necessary, adjust or remove the head restraint/headrest to obtain the correct child restraint fit. If the head restraint/headrest is removed, store it in a secure place. **Be sure to reinstall the head restraint/headrest when the child restraint is removed.** For additional information about head restraint/headrest adjustment, refer to “Head restraints/headrests” in this section.

If the seating position does not have an adjustable head restraint/headrest and it is interfering with the proper child restraint fit, try another seating position or a different child restraint.

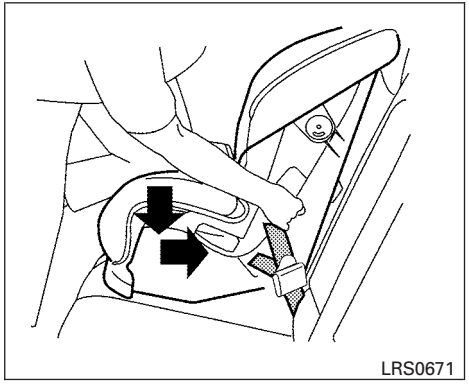

Forward-facing – step 4

4. For child restraints that are equipped with webbing-mounted attachments, remove any additional slack from the anchor attachments. Press downward and rearward firmly in the center of the child restraint with your knee to compress the vehicle seat cushion and seatback while tightening the webbing of the anchor attachments.

5. Tighten the tether strap according to the manufacturer's instructions to remove any slack.

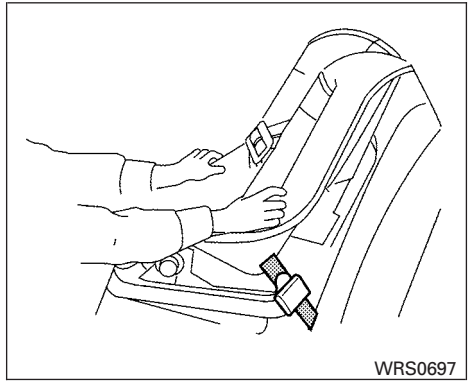

Forward-facing – step 6

6. After attaching the child restraint, test it before you place the child in it. Push it from side to side while holding the child restraint near the LATCH attachment path. The child restraint should not move more than 1 inch (25 mm), from side to side. Try to tug it forward and check to see if the LATCH attachment holds the restraint in place. If the restraint is not secure, tighten the LATCH attachment as necessary, or put the restraint in another seat and test it again. You may need to try a different child restraint. Not all child restraints fit in all types of vehicles.

7. Check to make sure the child restraint is properly secured prior to each use. If the child restraint is loose, repeat steps 1 through 6.

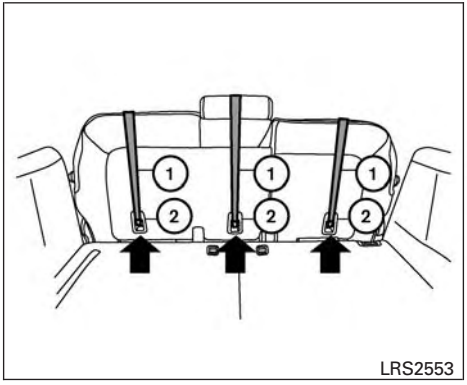

2nd row bench seat

① Top tether strap

② Anchor point

Installing top tether strap

The child restraint top tether strap must be used when installing the child restraint with the LATCH lower anchor attachments.

First, secure the child restraint with the LATCH lower anchors (2nd row bench outboard seating positions only).

2nd row bench seat

OUTBOARD SEATING POSITIONS

1. Remove the head restraint/headrest and store it in a secure place. Be sure to reinstall the head restraint/headrest when the child restraint is removed. For additional information about head restraint/headrest adjustment, removal and installation, refer to "Head restraints/headrests" in this section.
2. Position the top tether strap ① over the seatback.
3. Secure the tether strap to the tether anchor point ② as shown.
4. Tighten the tether strap according to the manufacturer's instructions to remove any slack.

If you have any questions when installing a top tether strap, it is recommended that you visit a NISSAN dealer for this service.

⚠ WARNING

Child restraint anchorages are designed to withstand only those loads imposed by correctly fitted child restraints. Under no circumstances are they to be used to attach adult seat belts, or other items or equipment to the vehicle. Doing so could damage the child restraint anchorages. The child restraint will not be properly installed using the damaged anchorage, and a child could be seriously injured or killed in a collision.

FORWARD-FACING CHILD RESTRAINT INSTALLATION USING THE SEAT BELTS

⚠ WARNING

The three-point seat belt with Automatic Locking Retractor (ALR) must be used when installing a child restraint. Failure to use the ALR mode will result in the child restraint not being properly secured. The restraint could tip over or be loose and cause injury to a child in a sudden stop or collision. Also, it can change the operation of the front passenger air bag. For additional information, refer to "Front passenger air bag and status light" in this section.

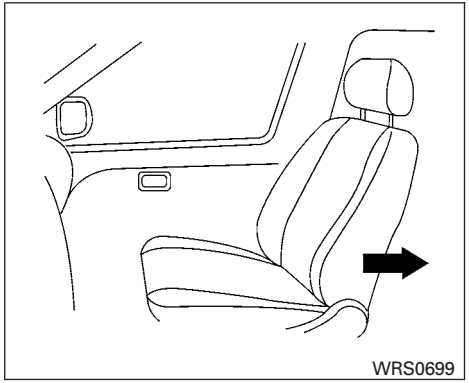

Forward-facing (front passenger seat) – step 1

For additional information, refer to all Warnings and Cautions in the “Child safety” and “Child restraints” sections of this manual before installing a child restraint.

Do not use the lower anchors if the combined weight of the child and the child restraint exceeds 65 lbs (29.5 kg). If the combined weight of the child and the child restraint is greater than 65 lbs (29.5 kg), use the vehicle’s seat belt (not the lower anchors) to install the child restraint. Be sure to follow the child restraint manufacturer’s instructions for installation.

Follow these steps to install a forward-facing child restraint using the vehicle seat belt in the rear seats or in the front passenger seat:

1. **If you must install a child restraint in the front seat, it should be placed in a forward-facing direction only. Move the seat to the rearmost position. Child restraints for infants must be used in the rear-facing direction and, therefore, must not be used in the front seat.**
2. Position the child restraint on the seat. Always follow the child restraint manufacturer’s instructions.

   The back of the child restraint should be secured against the vehicle seatback.

   If necessary, adjust or remove the head restraint/headrest to obtain the correct child restraint fit. If the head restraint/headrest is removed, store it in a secure place. **Be sure to reinstall the head restraint/headrest when the child restraint is removed.** For additional information about head restraint/headrest adjustment, removal and installation, refer to “Head restraints/headrests” in this section.

   If the seating position does not have an adjustable head restraint/headrest and it is interfering with the proper child restraint fit, try another seating position or a different child restraint.

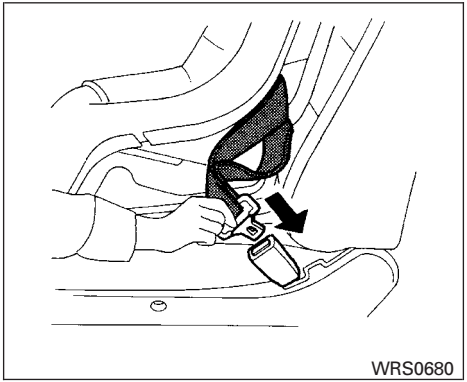

Forward-facing – step 3

3. Route the seat belt tongue through the child restraint and insert it into the buckle until you hear and feel the latch engage. Be sure to follow the child restraint manufacturer's instructions for belt routing.

   If the child restraint is equipped with a top tether strap, route the top tether strap and secure the tether strap to the tether anchor point (2nd row installation only). For additional information, refer to "Installing top tether strap" in this section.

   Do not install child restraints that require the use of a top tether strap in seating positions that do not have a top tether anchor.

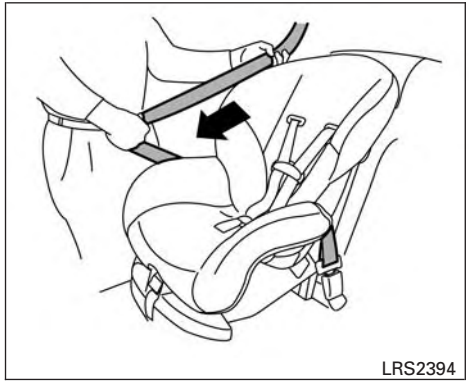

Forward-facing – step 4

4. Pull the shoulder belt until the belt is fully extended. At this time, the seat belt retractor is in the ALR mode (child restraint mode). It reverts to ELR mode when the seat belt is fully retracted.

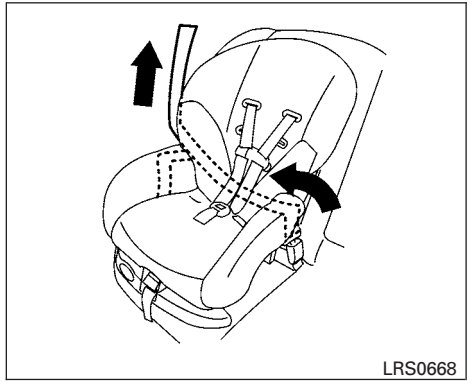

Forward-facing – step 5

5. Allow the seat belt to retract. Pull up on the shoulder belt to remove any slack in the belt.

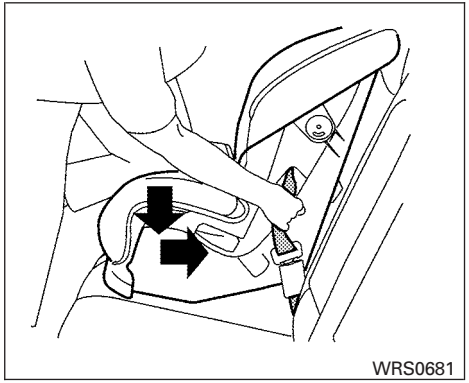

Forward-facing – step 6

6. Remove any additional slack from the seat belt; press downward and rearward firmly in the center of the child restraint with your knee to compress the vehicle seat cushion and seatback while pulling up on the seat belt.
7. Tighten the tether strap according to the manufacturer's instructions to remove any slack.

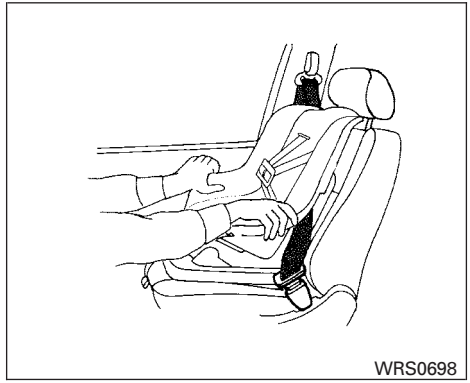

Forward-facing – step 8

8. After attaching the child restraint, test it before you place the child in it. Push it from side to side while holding the child restraint near the seat belt path. The child restraint should not move more than 1 inch (25 mm), from side to side. Try to tug it forward and check to see if the belt holds the restraint in place. If the restraint is not secure, tighten the seat belt as necessary, or put the restraint in another seat and test it again. You may need to try a different child restraint. Not all child restraints fit in all types of vehicles.
9. Check to make sure the child restraint is properly secured prior to each use. If the seat belt is not locked, repeat steps 2 through 8.

Forward-facing – step 10

10. If the child restraint is installed in the front passenger seat, place the ignition switch in the ON position. The front passenger air bag status light should illuminate. If this light is not illuminated, refer to “Front passenger air bag and status light” in this section. **Move the child restraint to another seating position.** Have the system checked. It is recommended that you visit a NISSAN dealer for this service.

After the child restraint is removed and the seat belt is fully retracted, the ALR mode (child restraint mode) is canceled.

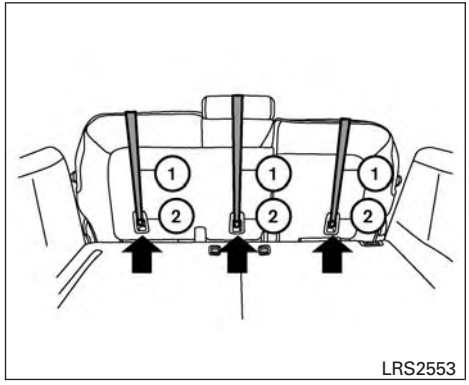

2nd row bench seat

① Top tether strap

② Anchor point

Installing top tether strap

The child restraint top tether strap must be used when installing the child restraint with seat belts.

First, secure the child restraint with the seat belt.

2nd row bench seat

OUTBOARD SEATING POSITIONS

1. Remove the head restraint/headrest and store it in a secure place. Be sure to reinstall the head restraint/headrest when the child restraint is removed. For additional information about head restraint/headrest adjustment, removal and installation, refer to “Head restraints/headrests” in this section.
2. Position the top tether strap ① over the seatback.
3. Secure the tether strap to the tether anchor point ② as shown.
4. Tighten the tether strap according to the manufacturer’s instructions to remove any slack.

CENTER SEATING POSITION

1. Position the top tether strap ① over the seatback.
2. Secure the tether strap to the tether anchor point ② as shown.
3. Tighten the tether strap according to the manufacturer’s instructions to remove any slack. Make sure the head restraint/headrest does not contact the top tether strap.

If you have any questions when installing a top tether strap, it is recommended that you visit a NISSAN dealer for this service.

⚠ WARNING

Child restraint anchorages are designed to withstand only those loads imposed by correctly fitted child restraints. Under no circumstances are they to be used to attach adult seat belts, or other items or equipment to the vehicle. Doing so could damage the child restraint anchorages. The child restraint will not be properly installed using the damaged anchorage, and a child could be seriously injured or killed in a collision.

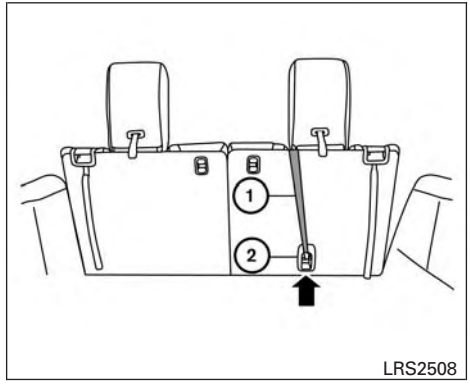

3rd row bench seat

① Top tether strap

② Anchor point

3rd row bench seat

⚠ WARNING

In the 3rd row bench seat, a child restraint with a top tether strap can only be used on the passenger side seating position. Do not place in the driver's side seating position and attempt to angle the tether strap to the passenger side seating position.

The passenger side of the 3rd row bench seat is the seating position that can use a top tether strap. First, secure the child restraint with the seat belt, as applicable.

1. Position the top tether strap ① as shown.
2. Secure the tether strap to the tether anchor point ② as shown.
3. Tighten the tether strap according to the manufacturer's instructions to remove any slack. Make sure the head restraint/headrest does not contact the top tether strap.

If you have any questions when installing a top tether strap, it is recommended that you visit a NISSAN dealer for this service.

⚠ WARNING

Child restraint anchorages are designed to withstand only those loads imposed by correctly fitted child restraints. Under no circumstances are they to be used to attach adult seat belts, or other items or equipment to the vehicle. Doing so could damage the child restraint anchorages. The child restraint will not be properly installed using the damaged anchorage, and a child could be seriously injured or killed in a collision.

BOOSTER SEATS

For additional information on installing a booster seat in your vehicle, follow the instructions outlined in this section.

Precautions on booster seats

⚠ WARNING

If a booster seat and seat belt are not used properly, the risk of a child being injured or killed in a sudden stop or collision greatly increases:

- **Make sure the shoulder portion of the belt is away from the child's face and neck and the lap portion of the belt does not cross the stomach.**
- **Make sure the shoulder belt is not behind the child or under the child's arm.**
- **A booster seat must only be installed in a seating position that has a lap/shoulder belt.**

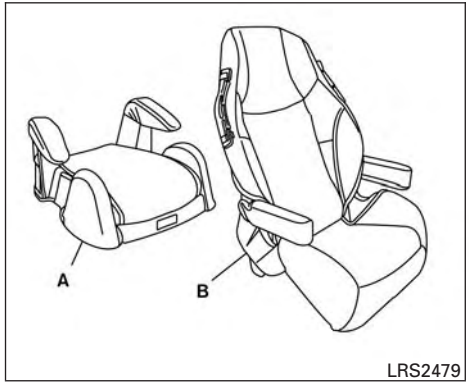

A. Low back booster seat

B. High back booster seat

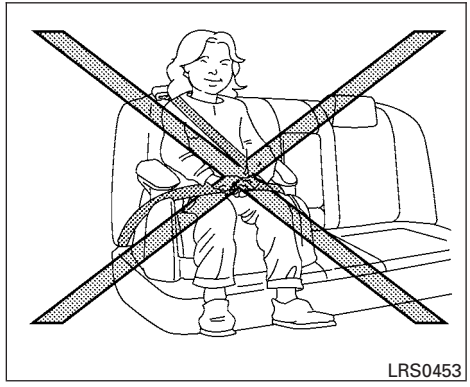

Booster seats of various sizes are offered by several manufacturers. When selecting any booster seat, keep the following points in mind:

- Choose only a booster seat with a label certifying that it complies with Federal Motor Vehicle Safety Standard 213 or Canadian Motor Vehicle Safety Standard 213.
- Check the booster seat in your vehicle to be sure it is compatible with the vehicle's seat and seat belt system.

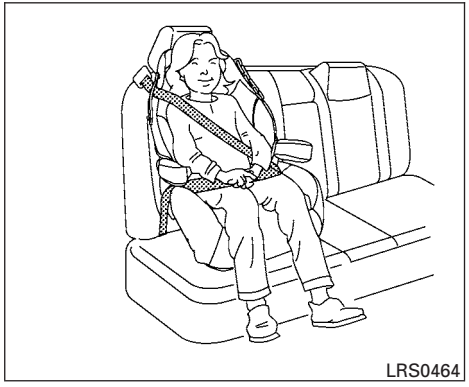
LRS0464

- Make sure the child's head will be properly supported by the booster seat or vehicle seat. The seatback must be at or above the center of the child's ears. For example, if a low back booster seat is chosen, the vehicle seatback must be at or above the center of the child's ears. If the seatback is lower than the center of the child's ears, a high back booster seat should be used.
- If the booster seat is compatible with your vehicle, place the child in the booster seat and check the various adjustments to be sure the booster seat is compatible with the child. Always follow all recommended procedures.

All U.S. states and Canadian provinces or territories require that infants and small children be restrained in an approved child restraint at all times while the vehicle is being operated.

The instructions in this section apply to booster seat installation in the rear seats or the front passenger seat.

Booster seat installation

⚠ WARNING

To avoid injury to child, do not use the lap/shoulder belt in the Automatic Locking Retractor (ALR) mode when using a booster seat with the seat belts.

For additional information, refer to all Warnings and Cautions in the "Child safety," "Child restraints" and "Booster seats" sections of this manual before installing a child restraint.

Follow these steps to install a booster seat in the 2nd or 3rd rows or in the front passenger seat:

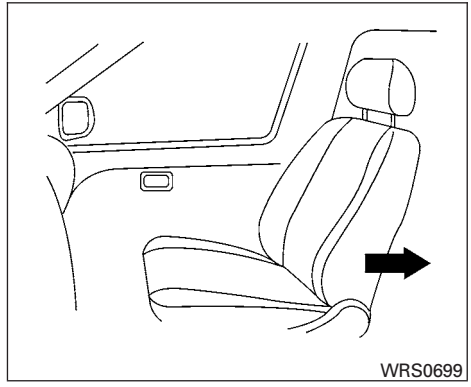
WRS0699

1. **If you must install a booster seat in the front seat, move the seat to the rearmost position.**
2. Position the booster seat on the seat. Only place it in a front-facing direction. Always follow the booster seat manufacturer's instructions.

Front passenger position

3. The booster seat should be positioned on the vehicle seat so that it is stable.

   If necessary, adjust or remove the head restraint/headrest to obtain the correct booster seat fit. If the head restraint/headrest is removed, store it in a secure place. **Be sure to reinstall the head restraint/headrest when the booster seat is removed.** For additional information about head restraint/headrest adjustment, removal and installation, refer to “Head restraints/headrests” in this section.

   If the seating position does not have an adjustable head restraint/headrest and it is interfering with the proper booster seat fit, try another seating position or a different booster seat.

4. Position the lap portion of the seat belt low and snug on the child’s hips. Be sure to follow the booster seat manufacturer’s instructions for adjusting the seat belt routing.

5. Pull the shoulder belt portion of the seat belt toward the retractor to take up extra slack. Be sure the shoulder belt is positioned across the top, middle portion of the child’s shoulder. Be sure to follow the booster seat manufacturer’s instructions for adjusting the seat belt routing.

6. Follow the warnings, cautions and instructions for properly fastening a seat belt shown in “Three-point type seat belt with retractor” in this section.

7. If the booster seat is installed in the front passenger seat, place the ignition switch in the ON position. The front passenger air bag status light may or may not illuminate, depending on the size of the child and the type of booster seat being used. For additional information, refer to “Front passenger air bag and status light” in this section.

SUPPLEMENTAL RESTRAINT SYSTEM (SRS)

PRECAUTIONS ON SRS

This SRS section contains important information concerning the following systems:

- Driver and front passenger supplemental front-impact air bag (NISSAN Advanced Air Bag System)
- Front seat-mounted side-impact supplemental air bag
- Roof-mounted curtain side-impact and rollover supplemental air bag
- Seat belt with pretensioner(s) (front seats)

Supplemental front-impact air bag system

The NISSAN Advanced Air Bag System can help cushion the impact force to the head and chest of the driver and front passenger in certain frontal collisions.

Front seat-mounted side-impact supplemental air bag system

This system can help cushion the impact force to the chest area of the driver and front passenger in certain side-impact collisions. The side air bags are designed to inflate on the side where the vehicle is impacted.

Roof-mounted curtain side-impact and rollover supplemental air bag system

This system can help cushion the impact force to the head of occupants in front and rear outboard seating positions in certain side-impact collisions. The curtain air bags are designed to inflate on the side where the vehicle is impacted. In a rollover, the curtain air bags are designed to inflate and remain inflated for a short time.

The SRS is designed to **supplement** the crash protection provided by the driver and front passenger seat belts and is **not a substitute** for them. Seat belts should always be correctly worn and the occupant seated a suitable distance away from the steering wheel, instrument panel and door finishers. For additional information about instructions and precautions on seat belt usage, refer to “Seat belts” in this section.

The supplemental air bags operate only when the ignition switch is placed in the ON position.

After placing the ignition switch in the ON position, the supplemental air bag warning light illuminates. The supplemental air bag warning light will turn off after about 7 seconds if the system is operational.

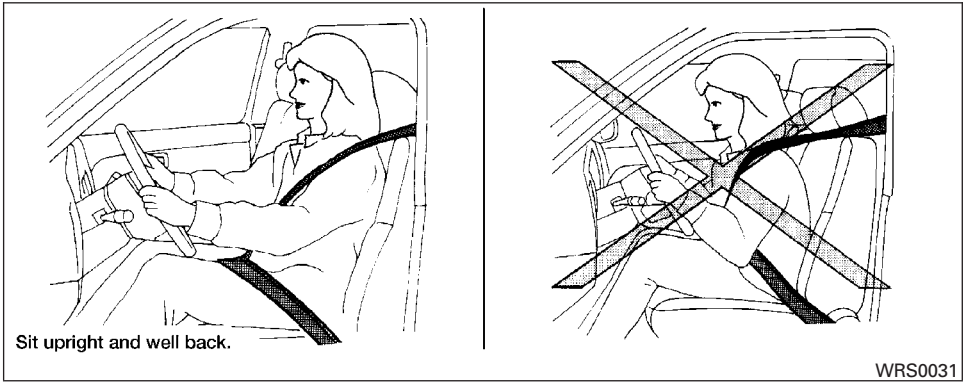

⚠WARNING

- **The front air bags ordinarily will not inflate in the event of a side impact, rear impact, rollover, or lower severity frontal collision. Always wear your seat belts to help reduce the risk or severity of injury in various kinds of accidents**
- **The front passenger air bag will not inflate if the passenger air bag status light is lit. For additional information, refer to "Front passenger air bag and status light" in this section.**
- **The seat belts and the front air bags are most effective when you are sitting well back and upright in the seat. The front air bags inflate with great force. Even with the NISSAN Advanced Air Bag System, if you are unrestrained, leaning forward, sitting sideways or out of position in any way, you are at greater risk of injury or death in a crash. You may also receive serious or fatal injuries from the front air bag if you are up against it when it inflates. Always sit back against the seatback and as far away as practical from the steering wheel or instrument panel. Always properly use the seat belts.**
- **The driver and front passenger seat belt buckles are equipped with sensors that detect if the seat belts are fastened. The NISSAN Advanced Air Bag System monitors the severity of a collision and seat belt usage, then inflates the air bags as needed. Failure to properly wear seat belts can increase the risk or severity of injury in an accident.**
- **The front passenger seat is equipped with an occupant classification sensor (weight sensor) that turns the front passenger air bag OFF under some conditions. This sensor is only used in this seat. Failure to be properly seated and wearing the seat belt can increase the risk or severity of injury in an accident. For additional information, refer to "Front passenger air bag and status light" in this section.**
- **Keep hands on the outside of the steering wheel. Placing them inside the steering wheel rim could increase the risk that they are injured when the front air bag inflates.**

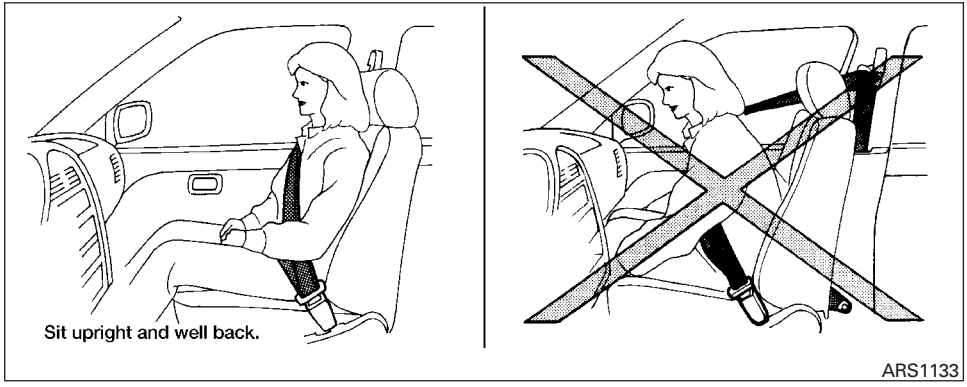

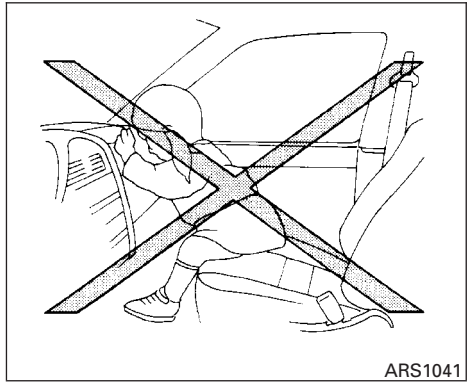

⚠ WARNING

- **Never let children ride unrestrained or extend their hands or face out of the window. Do not attempt to hold them in your lap or arms. Some examples of dangerous riding positions are shown in the illustrations.**

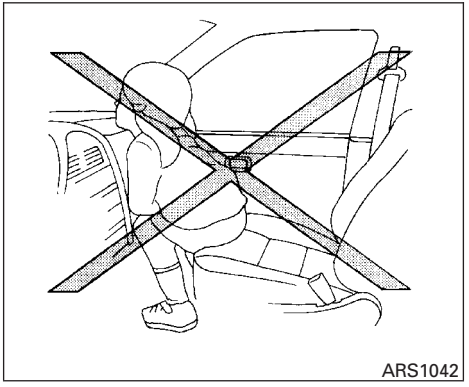
ARS1042

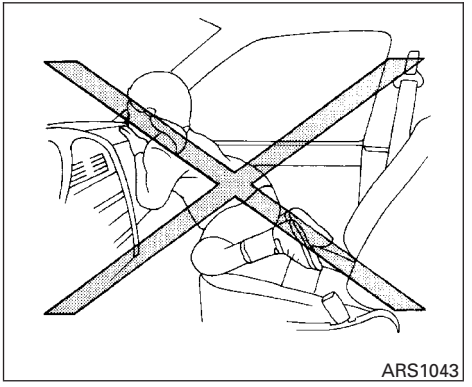
ARS1043

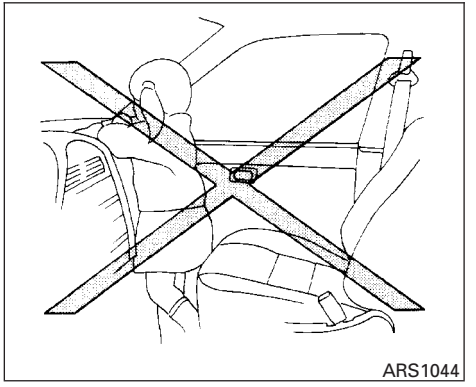
ARS1044

⚠ WARNING

- **Children may be severely injured or killed when the front air bags, side air bags or curtain air bags inflate if they are not properly restrained. Pre-teens and children should be properly restrained in the rear seat, if possible.**

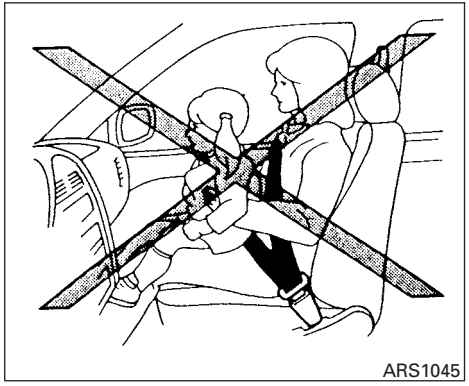
ARS1045

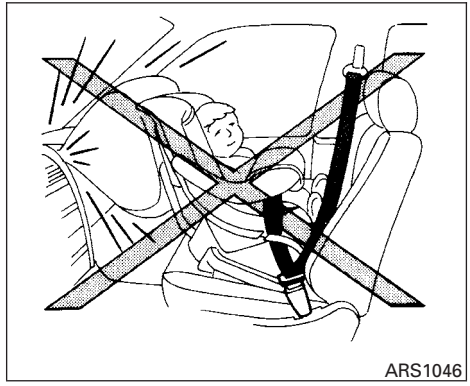
ARS1046

⚠ WARNING

- **Even with the NISSAN Advanced Air Bag System, never install a rear-facing child restraint in the front seat. An inflating front air bag could seriously injure or kill your child. For additional information, refer to "Child restraints" in this section.**

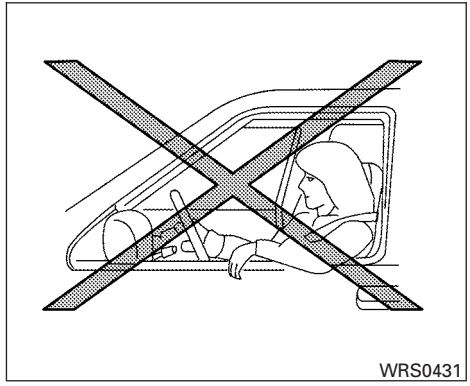
WRS0431

⚠ WARNING

Front seat-mounted side-impact supplemental air bags and roof-mounted curtain side-impact and rollover supplemental air bags:

- **The side air bags and curtain air bags ordinarily will not inflate in the event of a frontal impact, rear impact, or lower severity side collision. Always wear your seat belts to help reduce the risk or severity of injury in various kinds of accidents.**

⚠ WARNING

- **The seat belts, the side air bags and curtain air bags are most effective when you are sitting well back and upright in the seat with both feet on the floor. The side air bag and curtain air bag inflate with great force. Do not allow anyone to place their hand, leg or face near the side air bag on the side of the seatback of the front seat or near the side roof rails. Do not allow anyone sitting in the front seats or rear outboard seats to extend their hand out of the window or lean against the door. Some examples of dangerous riding positions are shown in the previous illustrations.**

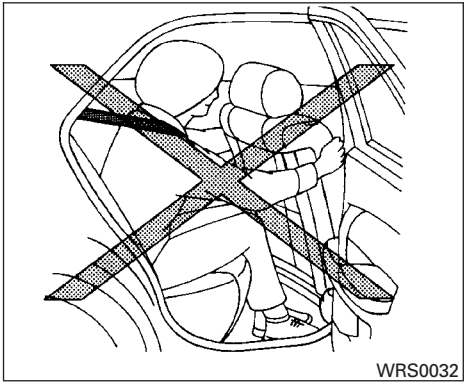

WRS0032

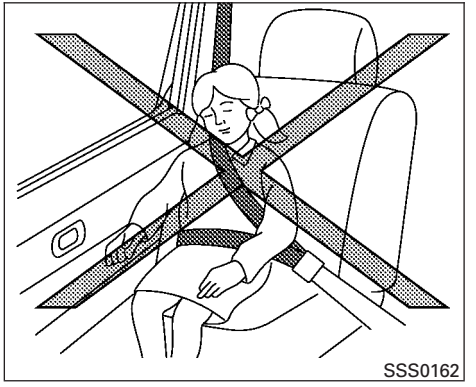

SSS0162

⚠ WARNING

- **When sitting in the rear seat, do not hold onto the seatback of the front seat. If the side air bag inflates, you may be seriously injured. Be especially careful with children, who should always be properly restrained. Some examples of dangerous riding positions are shown in the illustrations.**
- **Do not use seat covers on the front seatbacks. They may interfere with side air bag inflation.**

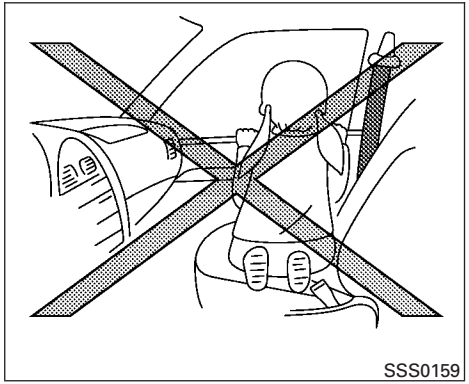
SSS0159

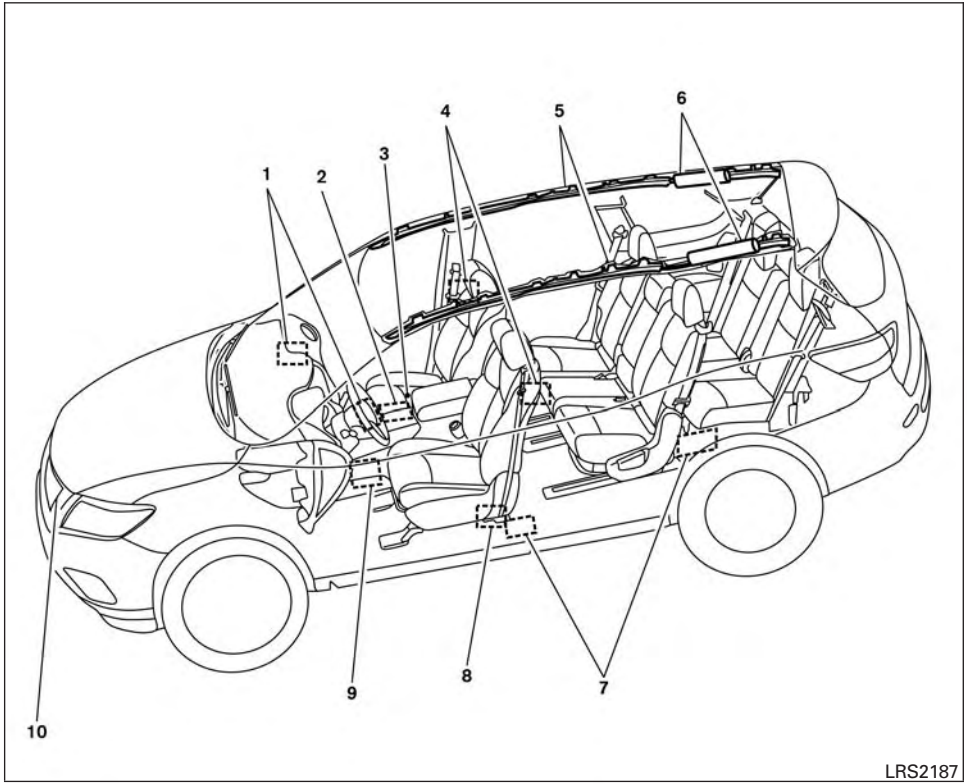
1
2
3
4
5
6
7
8
9
10
LRS2187

NISSAN Advanced Air Bag System (front seats)

1. Supplemental front-impact air bag modules
2. Air bag Control Unit (ACU)
3. Occupant classification sensor (weight sensor)
4. Front seat-mounted side-impact supplemental air bag modules
5. Roof-mounted curtain side-impact and rollover supplemental air bags
6. Roof-mounted curtain side-impact and rollover supplemental air bag inflators
7. Satellite sensors
8. Seat belt with pretensioner(s) (front seats)
9. Pressure sensors in door (driver's side shown; front passenger side similar)
10. Crash zone sensor

⚠ WARNING

To ensure proper operation of the passenger's NISSAN Advanced Air Bag System, please observe the following items.

- **Do not allow a passenger in the rear bench seats to push or pull on the seatback pocket.**
- **Do not place heavy loads heavier than 2.2 lb (1 kg) on the seatback, head restraint/headrest or in the seatback pocket.**
- **Make sure that there is nothing pressing against the rear of the seatback, such as a child restraint installed in the rear seat or an object stored on the floor.**
- **Make sure that there is no object placed under the front passenger seat.**
- **Make sure that there is no object placed between the seat cushion and center console or between the seat cushion and the door.**
- **If a forward-facing child restraint is installed in the front passenger seat, do not position the front passenger seat so the child restraint contacts the instrument panel. If the child restraint does contact the instrument panel, the system may determine the seat is occupied and the passenger air bag may deploy in a collision. Also the front passenger air bag status light may not illuminate. For additional information about installing and using child restraints, refer to "Child restraints" in this section.**
- **Confirm the operating condition with the front passenger air bag status light.**
- **If you notice that the front passenger air bag status light is not operating as described in this section, get the occupant classification system checked. It is recommended that you visit a NISSAN dealer for this service.**
- **Until you have confirmed with a dealer that your passenger seat occupant classification system is working properly, position the occupants in the rear seating positions.**

- **Do not position the front passenger seat so it contacts the rear seat. If the front seat does contact the rear seat, the air bag system may determine a sensor malfunction has occurred and the front passenger air bag status light may illuminate and the supplemental air bag warning light may flash.**

This vehicle is equipped with the NISSAN Advanced Air Bag System for the driver and front passenger seats. This system is designed to meet certification requirements under U.S. regulations. It is also permitted in Canada. **However, all of the information, cautions and warnings in this manual still apply and must be followed.**

The driver supplemental front-impact air bag is located in the center of the steering wheel. The front passenger supplemental front-impact air bag is mounted in the dashboard above the glove box. The front air bags are designed to inflate in higher severity frontal collisions, although they may inflate if the forces in another type of collision are similar to those of a higher severity frontal impact. They may not inflate in certain frontal collisions. Vehicle damage (or lack of it) is not always an indication of proper front air bag system operation.

The NISSAN Advanced Air Bag System monitors information from the crash zone sensor, the Air bag Control Unit (ACU), seat belt buckle sensors and occupation classification sensor (weight sensor). Inflator operation is based on the severity of a collision and seat belt usage for the driver. For the front passenger, the occupant classification sensor is also monitored. Based on information from the sensor, only one front air bag may inflate in a crash, depending on the crash severity and whether the front occupants are belted or unbelted. Additionally, the front passenger air bag may be automatically turned off under some conditions, depending on the weight detected on the front passenger seat and how the seat belt is used. If the front passenger air bag is OFF, the front passenger air bag status light will be illuminated. For additional information, refer to “Front passenger air bag and status light” in this section. One front air bag inflating does not indicate improper performance of the system.

If you have any questions about your air bag system, it is recommended that you visit a NISSAN dealer to obtain information about the system. If you are considering modification of your vehicle due to a disability, you may also contact NISSAN. Contact information is contained in the front of this Owner’s Manual.

When a front air bag inflates, a fairly loud noise may be heard, followed by the release of smoke. This smoke is not harmful and does not indicate a fire. Care should be taken to not inhale it, as it may cause irritation and choking. Those with a history of a breathing condition should get fresh air promptly.

Front air bags, along with the use of seat belts, help to cushion the impact force on the face and chest of the front occupants. They can help save lives and reduce serious injuries. However, an inflating front air bag may cause facial abrasions or other injuries. Front air bags do not provide restraint to the lower body.

Even with NISSAN Advanced Air Bags, seat belts should be correctly worn and the driver and front passenger seated upright as far as practical away from the steering wheel or instrument panel. The front air bags inflate quickly in order to help protect the front occupants. Because of this, the force of the front air bag inflating can increase the risk of injury if the occupant is too close to, or is against, the front air bag module during inflation.

The front air bags deflate quickly after a collision.

The front air bags operate only when the ignition switch is in the ON position.

After placing the ignition switch in the ON position, the supplemental air bag warning light illuminates. The supplemental air bag warning light will turn off after about 7 seconds if the system is operational.

Front passenger air bag and status light

⚠ WARNING

The front passenger air bag is designed to automatically turn OFF under some conditions. Read this section carefully to learn how it operates. Proper use of the seat, seat belt and child restraints is necessary for most effective protection. Failure to follow all instructions in this manual concerning the use of seats, seat belts and child restraints can increase the risk or severity of injury in an accident.

Status light

The front passenger seat is equipped with an occupant classification sensor (weight sensor) that turns the front passenger air bag on or off depending on the weight applied to the front passenger seat. The status of the front passenger air bag (ON or OFF) is indicated by the front passenger air bag status light which is located on the instrument panel.

After the ignition switch is placed in the "ON" position, the front passenger air bag status light on the instrument panel illuminates for about 7 seconds and then turns off or remains illuminated depending on the front passenger seat occupied status. The light operates as follows:

CONDITION	DESCRIPTION	PASSENGER AIR BAG INDICATOR LIGHT (OFF)	FRONT PASSENGER AIR BAG STATUS
Empty	Empty front passenger seat	ON (illuminated)	INHIBITED
Nobody/Somebody	Bag or Child or Child Restraint or Small Adult in front passenger seat	ON (illuminated)	INHIBITED
Adult	Adult in the front passenger seat	OFF (dark)	ACTIVATED

In addition to the above, certain objects placed on the front passenger seat may also cause the light to operate as described above depending on their weight.

For additional information related to the normal operation and troubleshooting of this occupant classification sensor system, please refer to “Normal operation” and “Troubleshooting” in this section.

Front passenger air bag

The front passenger air bag is designed to automatically turn OFF when the vehicle is operated under some conditions as described below in accordance with U.S. regulations. If the front passenger air bag is OFF, it will not inflate in a crash. The driver air bag and other air bags in your vehicle are not part of this system.

The purpose of the regulation is to help reduce the risk of injury or death from an inflating air bag to certain front passenger seat occupants, such as children, by requiring the air bag to be automatically turned OFF. Certain sensors are used to meet the requirements.

The occupant classification sensor in this vehicle is a weight sensor. It is designed to detect an occupant and objects on the seat by weight. For example, if a child is in the front passenger seat, the NISSAN Advanced Air Bag System is designed to turn the front passenger air bag OFF in accordance with the regulations. Also, if a child restraint of the type specified in the regulations is on the seat, its weight and the child’s weight can be detected and cause the air bag to turn OFF.

Front passenger seat adult occupants who are properly seated and using the seat belt as outlined in this manual should not cause the front passenger air bag to be automatically turned OFF. For small adults it may be turned OFF, however if the occupant takes his/her weight off the seat cushion (for example, by not sitting upright, by sitting on an edge of the seat, or by otherwise being out of position), this could cause the sensor to turn the air bag OFF. Always be sure to be seated and wearing the seat belt properly for the most effective protection by the seat belt and supplemental air bag.

NISSAN recommends that pre-teens and children be properly restrained in a rear seat. NISSAN also recommends that appropriate child restraints and booster seats be properly installed in a rear seat. If this is not possible, the occupant classification sensor is designed to operate as described above to turn the front passenger air bag OFF for specified child restraints as required by the regulations. Failing to properly secure child restraints and to use the ALR mode may allow the restraint to tip or move in a collision or sudden stop. This can also result in the passenger air bag inflating in a crash instead of being OFF. For additional information about proper use and installation, refer to “Child restraints” in this section.

If the front passenger seat is not occupied, the front passenger air bag is designed not to inflate

in a crash. However, heavy objects placed on the seat could result in air bag inflation, because of the object's weight detected by the occupant classification sensor. Other conditions could also result in air bag inflation, such as if a child is standing on the seat, or if two children are on the seat, contrary to the instructions in this manual. Always be sure that you and all vehicle occupants are seated and restrained properly.

Using the front passenger air bag status light, you can monitor when the front passenger air bag is automatically turned OFF.

If an adult occupant is in the seat but the front passenger air bag status light is illuminated (indicating that the air bag is OFF), it could be that the person is a small adult, or is not sitting on the seat properly or not using the seat belt properly.

If a child restraint must be used in the front seat, the front passenger air bag status light may or may not be illuminated, depending on the size of the child and the type of child restraint being used. If the air bag status light is not illuminated (indicating that the air bag might inflate in a crash), it could be that the child restraint or seat belt is not being used properly. Make sure that the child restraint is installed properly, the seat belt is used properly and the occupant is positioned properly. If the air bag status light is still not illuminated, reposition the occupant or child restraint in a rear seat.

If the front passenger air bag status light will not illuminate even though you believe that the child restraint, the seat belts and the occupant are properly positioned, it is recommended that you take your vehicle to a NISSAN dealer. A NISSAN dealer can check system status by using a special tool. However, until you have confirmed with a dealer that your air bag is working properly, reposition the occupant or child restraint in a rear seat.

The NISSAN Advanced Air Bag System and front passenger air bag status light will take a few seconds to register a change in the front passenger seat status. For example, if a large adult who is sitting in the front passenger seat exits the vehicle, the front passenger air bag status light will go from OFF to ON for a few seconds and then to OFF. This is normal system operation and does not indicate a malfunction.

If a malfunction occurs in the front passenger air bag system, the supplemental air bag warning light , located in the meter and gauges area of the instrument panel, will be illuminated (blinking or steadily lit). Have the system checked. It is recommended that you visit a NISSAN dealer for this service.

Normal operation

In order for the occupant classification sensor system to classify the front passenger based on weight, please follow the precautions and steps outlined below:

Precautions

- Make sure that there are no objects weighing over 2.2 lbs (1 kg) hanging on the seat or placed in the seatback pocket.
- Make sure that a child restraint or other object is not pressing against the rear of the seatback.
- Make sure that a rear passenger is not pushing or pulling on the back of the front passenger seat.
- Make sure that the front passenger seat or seatback is not forced back against an object on the seat or floor behind it.
- Make sure that there is no object placed under the front passenger seat.

Steps

1. Adjust the seat as outlined in the "Seats" section of this manual. Sit upright, leaning against the seatback, and centered on the seat cushion with your feet comfortably extended to the floor.

2. Make sure there are no objects on your lap.
3. Fasten the seat belt as outlined in the “Seat belts” section of this manual. Front passenger seat belt buckle status is monitored by the occupant classification system, and is used as an input to determine occupancy status. So, it is highly recommended that the front passenger fasten their seat belt.
4. Remain in this position for 30 seconds allowing the system to classify the front passenger before the vehicle is put into motion.
5. Ensure proper classification by checking the front passenger air bag status light.

NOTE:

This vehicle’s occupant classification sensor system generally keeps the classification locked during driving, so it is important that you confirm that the front passenger is properly classified prior to driving. However, the occupant classification sensor may recalculate the weight of the occupant under some conditions (both while driving and when stopped), so front passenger seat occupants should continue to remain seated as outlined above.

Troubleshooting

If you think the front passenger air bag status light is incorrect:

1. If the light is ON with an adult occupying the front passenger seat:

- Occupant is a small adult — the air bag light is functioning as intended. The front passenger air bag is suppressed.

However, if the occupant is not a small adult, then this may be due to the following conditions that may be interfering with the weight sensors:

- Occupant is not sitting upright, leaning against the seatback, and centered on the seat cushion with his/her feet comfortably extended to the floor.
- A child restraint or other object pressing against the rear of the seatback.
- A rear passenger pushing or pulling on the back of the front passenger seat.
- Forcing the front seat or seatback against an object on the seat or floor behind it.
- An object placed under the front passenger seat.
- An object placed between the seat cushion and center console or between the seat cushion and the door.

If the vehicle is moving, please come to a stop when it is safe to do so. Check and correct any of the above conditions. Restart the vehicle and wait 1 minute.

NOTE:

A system check will be performed during which the front passenger air bag status light will remain lit for about 7 seconds initially.

If the light is still ON after this, the person should be advised not to ride in the front passenger seat and the vehicle should be checked as soon as possible. It is recommended that you visit a NISSAN dealer for this service.

2. If the light is OFF with a small adult, child or child restraint occupying the front passenger seat.

   This may be due to the following conditions that may be interfering with the weight sensors:

- Small adult or child is not sitting upright, leaning against the seatback, and centered on the seat cushion with his/her feet comfortably extended to the floor.
- The child restraint is not properly installed, as outlined in the “Child restraints” section of this manual.

- An object weighing over 2.2 lbs (1 kg) hanging on the seat or placed in the seatback pocket.
- A child restraint or other object pressing against the rear of the seatback.
- A rear passenger pushing or pulling on the back of the front passenger seat.
- Forcing the front seat or seatback against an object on the seat or floor behind it.
- An object placed under the front passenger seat.
- An object placed between the seat cushion and center console.

If the vehicle is moving, please come to a stop when it is safe to do so. Check and correct any of the above conditions. Restart the vehicle and wait 1 minute.

NOTE:

A system check will be performed during which the front passenger air bag status light will remain lit for about 7 seconds initially.

If the light is still OFF after this, the small adult, child or child restraint should be repositioned in the rear seat and the vehicle should be checked as soon as possible. It is recommended that you visit a NISSAN dealer for this service.

3. If the light is OFF with no front passenger and no objects on the front passenger seat, the vehicle should be checked. It is recommended that you visit a NISSAN dealer as soon as possible.

Other supplemental front-impact air bag precautions

⚠ WARNING

- **Do not place any objects on the steering wheel pad or on the instrument panel. Also, do not place any objects between any occupant and the steering wheel or instrument panel. Such objects may become dangerous projectiles and cause injury if the front air bags inflate.**
- **Immediately after inflation, several front air bag system components will be hot. Do not touch them; you may severely burn yourself.**
- **No unauthorized changes should be made to any components or wiring of the supplemental air bag system. This is to prevent accidental inflation of the supplemental air bag or damage to the supplemental air bag system.**
- **Do not make unauthorized changes to your vehicle's electrical system, suspension system or front end structure. This could affect proper operation of the front air bag system.**
- **Tampering with the front air bag system may result in serious personal injury. Tampering includes changes to the steering wheel and the instrument panel assembly by placing material over the steering wheel pad and above the instrument panel or by installing additional trim material around the air bag system.**
- **Removing or modifying the front passenger seat may affect the function of the air bag system and result in serious personal injury.**

- **Modifying or tampering with the front passenger seat may result in serious personal injury. For example, do not change the front seats by placing material on the seat cushion or by installing additional trim material, such as seat covers, on the seat that are not specifically designed to assure proper air bag operation. Additionally, do not stow any objects under the front passenger seat or the seat cushion and seatback. Such objects may interfere with the proper operation of the occupant classification sensor (weight sensor).**
- **No unauthorized changes should be made to any components or wiring of the seat belt system. This may affect the front air bag system. Tampering with the seat belt system may result in serious personal injury.**
- **It is recommended that you visit a NISSAN dealer for work on and around the front air bag. It is also recommended that you visit a NISSAN dealer for installation of electrical equipment. The Supplemental Restraint System (SRS) wiring harnesses* should not be modified or disconnected. Unauthorized electrical test equipment and probing devices should not be used on the air bag system.**
- **A cracked windshield should be replaced immediately by a qualified repair facility. A cracked windshield could affect the function of the supplemental air bag system.**

***The SRS wiring harness connectors are yellow and orange for easy identification.**

When selling your vehicle, we request that you inform the buyer about the front air bag system and guide the buyer to the appropriate sections in this Owner's Manual.

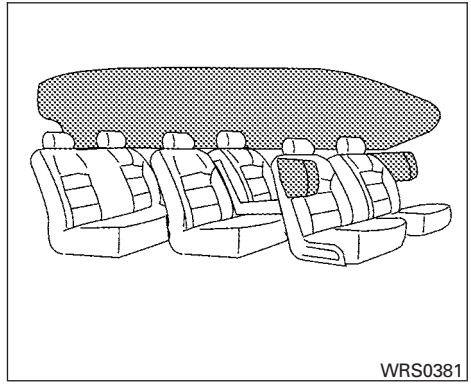

Front seat-mounted side-impact supplemental air bag and roof-mounted curtain side-impact and rollover supplemental air bag systems

The side air bags are located in the outside of the seatback of the front seats. The curtain air bags are located in the side roof rails in all three rows. **All of the information, cautions and warnings in this manual must be followed.** The side air bags and curtain air bags are designed to inflate in higher severity side collisions, although they may inflate if the forces in another type of collision are similar to those of a higher severity impact. They are designed to inflate on the side

where the vehicle is impacted. They may not inflate in certain side collisions.

Curtain air bags are also designed to inflate in certain types of rollover collisions or near rollovers. As a result, certain vehicle movements (for example, during severe off-roading) may cause the curtain air bags to inflate.

Vehicle damage (or lack of it) is not always an indication of proper side air bag and curtain air bag operation.

When the side air bags and curtain air bags inflate, a fairly loud noise may be heard, followed by release of smoke. This smoke is not harmful and does not indicate a fire. Care should be taken not to inhale it, as it may cause irritation and choking. Those with a history of a breathing condition should get fresh air promptly.

Side air bags, along with the use of seat belts, help to cushion the impact force on the chest of the front occupants. Curtain air bags help to cushion the impact force to the head of occupants in the front and rear outboard seating positions in all rows. They can help save lives and reduce serious injuries. However, an inflating side air bag or curtain air bag may cause abrasions or other injuries. Side air bags and curtain air bags do not provide restraint to the lower body.

The seat belts should be correctly worn and the driver and passenger seated upright as far as practical away from the side air bag. Rear seat passengers should be seated as far away as practical from the door finishers and side roof rails. The side air bags and curtain air bags inflate quickly in order to help protect the occupants. Because of this, the force of the side air bags and curtain air bags inflating can increase the risk of injury if the occupant is too close to, or is against, these air bag modules during inflation. The side air bag will deflate quickly after the collision is over.

The curtain air bag will remain inflated for a short time.

The side air bags and curtain air bags operate only when the ignition switch is placed in the ON position.

After placing the ignition switch in the ON position, the supplemental air bag warning light illuminates. The supplemental air bag warning light will turn off after about 7 seconds if the system is operational.

⚠ WARNING

- **Do not place any objects near the seatback of the front seats. Also, do not place any objects (an umbrella, bag, etc.) between the front door finisher and the front seat. Such objects may become dangerous projectiles and cause injury if a side air bag inflates.**
- **Right after inflation, several side air bag and curtain air bag system components will be hot. Do not touch them; you may severely burn yourself.**
- **No unauthorized changes should be made to any components or wiring of the side air bag and curtain air bag systems. This is to prevent damage to or accidental inflation of the side air bag and curtain air bag systems.**
- **Do not make unauthorized changes to your vehicle's electrical system, suspension system or side panel. This could affect proper operation of the curtain air bag systems.**

- **Tampering with the side air bag system may result in serious personal injury. For example, do not change the front seats by placing material near the seatbacks or by installing additional trim material, such as seat covers, around the side air bag.**
- **It is recommended that you visit a NISSAN dealer for work on and around the side air bag and curtain air bag. It is also recommended that you visit a NISSAN dealer for installation of electrical equipment. The SRS wiring harnesses* should not be modified or disconnected. Unauthorized electrical test equipment and probing devices should not be used on the side air bag or curtain air bag systems.**

***The SRS wiring harness or connectors are yellow or orange for easy identification.**

When selling your vehicle, we request that you inform the buyer about the side air bags and curtain air bag system and guide the buyer to the appropriate sections in this Owner's Manual.

Seat belt with pretensioner(s) (front seats)

⚠ WARNING

- **The pretensioner(s) cannot be reused after activation. They must be replaced together with the retractor and buckle as a unit.**
- **If the vehicle becomes involved in a collision but pretensioner(s) are not activated, be sure to have the pretensioner system checked and, if necessary, replaced. It is recommended that you visit a NISSAN dealer for this service.**
- **No unauthorized changes should be made to any components or wiring of the pretensioner system. This is to prevent damage to or accidental activation of the pretensioner(s). Tampering with the pretensioner system may result in serious personal injury.**
- **It is recommended that you visit a NISSAN dealer for work on and around the pretensioner system. It is also recommended that you visit a NISSAN dealer for installation of electrical equipment. Unauthorized electrical test equipment and probing devices should not be used on the pretensioner system.**
- **If you need to dispose of the pretensioner(s) or scrap the vehicle, it is recommended that you visit a NISSAN dealer for this service. Incorrect disposal procedures could cause personal injury.**

The pretensioner system may activate with the supplemental air bag system in certain types of collisions. Working with the seat belt retractor, the pretensioner(s) help tighten the seat belt when the vehicle becomes involved in certain types of collisions, helping to restrain front seat occupants.

The pretensioner(s) are encased within the seat belt retractor and to the seat belt anchor affixed to the floor of the vehicle. These seat belts are used the same way as conventional seat belts.

When pretensioner(s) activate, smoke is released and a loud noise may be heard. This smoke is not harmful and does not indicate a fire.

Care should be taken not to inhale it, as it may cause irritation and choking. Those with a history of a breathing condition should get fresh air promptly.

After the pretensioner(s') activation, load limiters allow the seat belt to release webbing (if necessary) to reduce forces against the chest.

The supplemental air bag warning light is used to indicate malfunctions in the pretensioner system. For additional information, refer to "Supplemental air bag warning light" in this section. If the operation of the supplemental air bag warning light indicates there is a malfunction, have the system checked. It is recommended that you visit a NISSAN dealer for this service.

When selling your vehicle, we request that you inform the buyer about the pretensioner system and guide the buyer to the appropriate sections in this Owner's Manual.

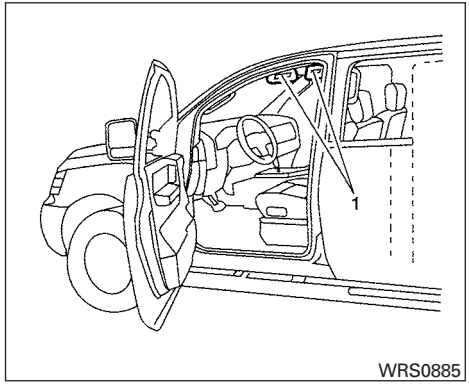

1. SRS Air bag warning labels

   The warning labels are located on the surface of the sun visor.

SUPPLEMENTAL AIR BAG WARNING LABELS

Warning labels about the supplemental front-impact air bag system are placed in the vehicle as shown in the illustration.

WARNING

Do not use a rear-facing child restraint on a seat protected by an air bag in front of it. If the air bag deploys, it may cause serious injury or death.

SUPPLEMENTAL AIR BAG WARNING LIGHT

The supplemental air bag warning light, displaying in the instrument panel, monitors the circuits for the air bag systems, pretensioner(s) and all related wiring.

When the ignition switch is placed in the ON position, the supplemental air bag warning light illuminates for about 7 seconds and then turns off. This means the system is operational.

If any of the following conditions occur, the front air bag, side air bag, curtain air bag and pretensioner systems need servicing:

- The supplemental air bag warning light remains on after approximately 7 seconds.
- The supplemental air bag warning light flashes intermittently.
- The supplemental air bag warning light does not come on at all.

Under these conditions, the front air bag, side air bag, curtain air bag or pretensioner systems may not operate properly. They must be checked and repaired. It is recommended that you visit a NISSAN dealer for this service.

⚠ WARNING

If the supplemental air bag warning light is on, it could mean that the front air bag, side air bag, curtain air bag and/or pretensioner systems will not operate in an accident. To help avoid injury to yourself or others, have your vehicle checked as soon as possible. It is recommended that you visit a NISSAN dealer for this service.

Repair and replacement procedure

The front air bags, side air bags, curtain air bags and pretensioner(s) are designed to inflate on a one-time-only basis. As a reminder, unless it is damaged, the supplemental air bag warning light remains illuminated after inflation has occurred. These systems should be repaired and/or replaced as soon as possible. It is recommended that you visit a NISSAN dealer for this service.

When maintenance work is required on the vehicle, the front air bags, side air bags, curtain air bags, pretensioner(s) and related parts should be pointed out to the person performing the maintenance. The ignition switch should always be placed in the LOCK position when working under the hood or inside the vehicle.

⚠ WARNING

- **Once a front air bag, side air bag, or curtain air bag has inflated, the air bag module will not function again and must be replaced. Additionally, the activated pretensioner(s) must also be replaced. The air bag module and pretensioner(s) should be replaced. It is recommended that you visit a NISSAN dealer for this service. However, the air bag module and pretensioner(s) cannot be repaired.**
- **The front air bag, side air bag, curtain air bag systems and the pretensioner system should be inspected if there is any damage to the front end or side portion of the vehicle. It is recommended that you visit a NISSAN dealer for this service.**
- **If you need to dispose of the supplemental air bag or pretensioner systems or scrap the vehicle, it is recommended that you visit a NISSAN dealer. Incorrect disposal procedures could cause personal injury.**
- **If there is an impact to your vehicle from any direction, your Occupant Classification Sensor (OCS) should be checked to verify it is still functioning correctly. It is recommended that you visit a NISSAN dealer for this service. The OCS should be checked even if no air bags deploy as a result of the impact. Failure to verify proper OCS function may result in an improper air bag deployment resulting in injury or death.**

MEMO

2 Instruments and controls

Instrument panel 2-2
Meters and gauges 2-3
Speedometer and odometer 2-4
Tachometer 2-5
Engine coolant temperature gauge 2-5
Fuel gauge 2-6
Compass (if so equipped) 2-7
Compass display 2-7
Warning lights, indicator lights and audible reminders 2-10
Checking lights 2-10
Warning lights 2-11
Indicator lights 2-15
Audible reminders 2-17
Vehicle Information Display 2-18
How to use the vehicle information display 2-19
Startup display 2-19
Resetting the trip computer 2-19
Settings 2-19
Vehicle information display warnings and indicators 2-26
Security systems 2-30
Vehicle security system 2-30
NISSAN vehicle immobilizer system 2-31
Wiper and washer switch 2-33
Switch operation 2-33
Rear switch operation 2-34
Rear window and outside mirror (if so equipped) defroster switch 2-35
Headlight and turn signal switch 2-36
Headlight control switch 2-36
LED Daytime Running Lights (DRL) 2-38
Instrument brightness control 2-39
Turn signal switch 2-39
Fog light switch (if so equipped) 2-40
Horn 2-40
Climate controlled seat switches (if so equipped) 2-40
Heated seat switches (if so equipped) 2-41
Heated 2nd row seat switches (if so equipped) 2-42
Heated steering wheel switch (if so equipped) 2-44
Vehicle Dynamic Control (VDC) off switch 2-44
Hill descent control (HDC) switch (if so equipped) . . . 2-45
Warning systems switch (if so equipped) 2-46
Tow mode switch 2-46
E-call (SOS) switch (if so equipped) 2-47
Power inverter switch (if so equipped) 2-47

Power outlets 2-48
12v outlets 2-48
120v outlet (if so equipped) 2-49
Extended storage switch 2-50
Storage 2-51
Seatback pockets 2-51
Storage trays 2-51
Glove box 2-52
Console box 2-52
Overhead sunglasses storage. 2-53
Cup holders 2-54
Cargo area storage bin. 2-56
Luggage hooks. 2-56
Roof rack (if so equipped) 2-57
Windows 2-58
Power windows 2-58
Dual panel moonroof (if so equipped) 2-61
Power moonroof. 2-61
Interior lights 2-63
Console light. 2-63
Map lights 2-64
Personal lights 2-64
Cargo light 2-64
Homelink® Universal Transceiver (if so equipped) 2-65
Programming HomeLink® 2-66
Programming HomeLink® for Canadian customers and gate openers. 2-67
Operating the HomeLink® Universal Transceiver 2-68
Programming trouble-diagnosis 2-68
Clearing the programmed information 2-68
Reprogramming a single HomeLink® button. 2-68
If your vehicle is stolen 2-69

INSTRUMENT PANEL

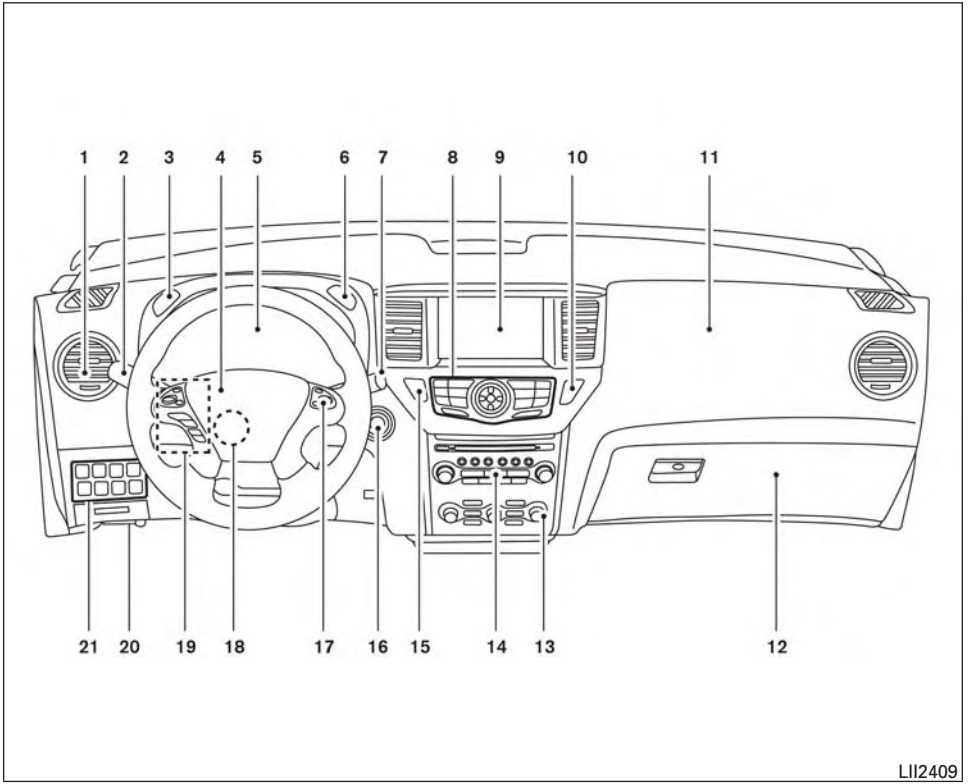

1. Vents (P. 4-46)
2. Headlight/fog light (if so equipped)/turn signal switch (P. 2-36)
3. Instrument brightness control (P. 2-36)
4. Driver supplemental air bag (P.1-49)
   Horn (P. 2-40)
5. Meters and gauges (P. 2-3)
   Warning and indicator lights (P. 2-10)
   Vehicle information display (P. 2-18)
6. Twin trip odometer reset switch (P. 2-4)
7. Wiper and washer switch (P. 2-33)
   Rear window wiper and washer switch (P. 2-33)
8. Control panel (P. 4-5)
9. Center display (P. 4-5)
   Navigation system* (if so equipped)
10. Front passenger air bag status light (P. 1-49)
11. Front passenger supplemental air bag (P. 1-49)
12. Glove box (P. 2-51)
13. Automatic heater and air conditioning controls (P. 4-47)
14. Audio system controls (P. 4-55)
15. Hazard warning flasher switch (P. 6-2)
16. Push-button ignition switch (P. 5-10)

17. Cruise control main/set switches (if so equipped) (P. 5-38)
    Intelligent Cruise Control (ICC) switches (if so equipped) (P. 5-40)
18. Tilt and telescopic steering wheel control (P. 3-31)
19. Control panel and vehicle information display switches (P. 2-19)
    Bluetooth® Hands-Free Phone System (P. 4-113)
20. Hood release (P. 3-20)
21. Vehicle Dynamic Control (VDC) OFF switch (P. 2-44)
    Tow mode switch (P. 2-46)
    Power liftgate main switch (if so equipped) (P. 3-21)
    Warning systems switch (if so equipped) (P. 2-46)
    Heated steering wheel switch (if so equipped) (P. 2-44)
    Power inverter switch (if so equipped) (P. 2-47)

*: Refer to the separate Navigation System Owner's Manual (if so equipped).

Refer to the page number indicated in parenthesis for operating details.

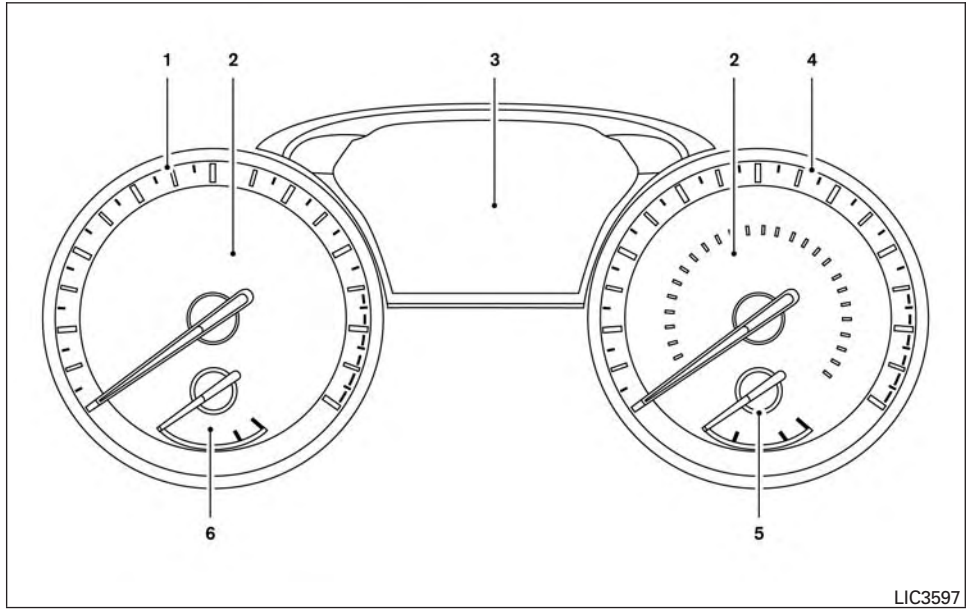

1. Tachometer
2. Warning and indicator lights
3. Vehicle information display
   Odometer
   Twin trip odometer
4. Speedometer
5. Fuel gauge
6. Engine coolant temperature gauge

SPEEDOMETER AND ODOMETER

This vehicle is equipped with a speedometer and odometer. The speedometer is located on the right side of the meter cluster. The odometer is located within the vehicle information display.

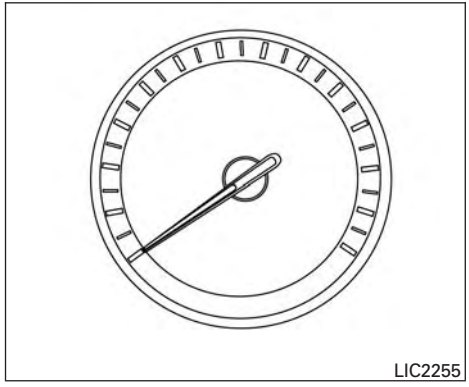

Speedometer

The speedometer indicates vehicle speed.

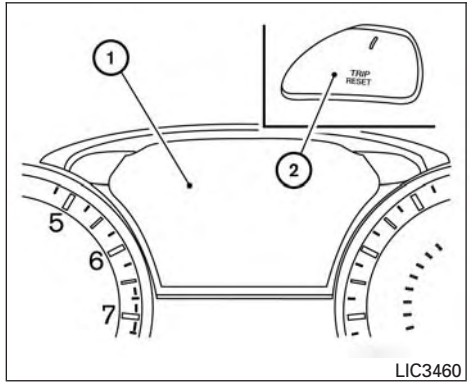

Odometer/Twin trip odometer

The odometer and the twin trip odometer ① are displayed in the vehicle information display when the ignition switch is placed in the ON position.

The odometer records the total distance the vehicle has been driven.

The twin trip odometer records the distance of individual trips.

Changing the display

Push the TRIP RESET② switch on the right side of the instrument panel to change the display as follows:

Trip A → Trip B → Odometer Mileage → Trip A

Resetting the trip odometer

Pushing the TRIP RESET switch ② for more than 1 second resets the currently displayed trip odometer to zero.

Average fuel economy and distance to empty information is also available. For additional information, refer to “Vehicle information display” in this section.

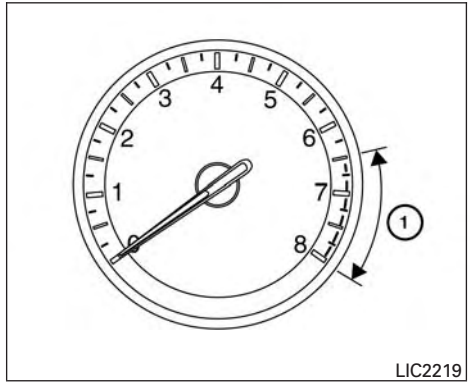

TACHOMETER

The tachometer indicates engine speed in revolutions per minute (rpm). Do not rev engine into the red zone ①.

⚠ CAUTION

When engine speed approaches the red zone, reduce engine speed. Operating the engine in the red zone may cause serious engine damage.

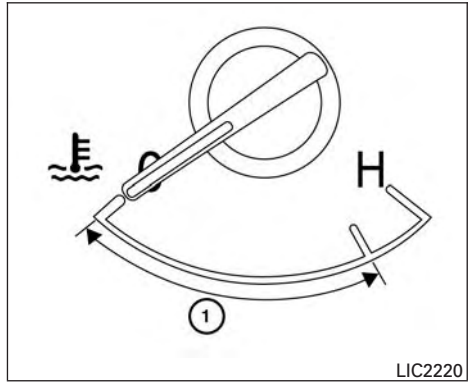

ENGINE COOLANT TEMPERATURE GAUGE

The gauge indicates the engine coolant temperature. The engine coolant temperature is within the normal range ① when the gauge needle points within the zone shown in the illustration.

The engine coolant temperature varies with the outside air temperature and driving conditions.

⚠ CAUTION

If the gauge indicates coolant temperature near the hot (H) end of the normal range, reduce vehicle speed to decrease temperature. If the gauge is over the normal range, stop the vehicle as soon as safely possible. If the engine is overheated, continued operation of the vehicle may seriously damage the engine. For additional information, refer to "If your vehicle overheats" in the "In case of emergency" section of this manual for immediate action required.

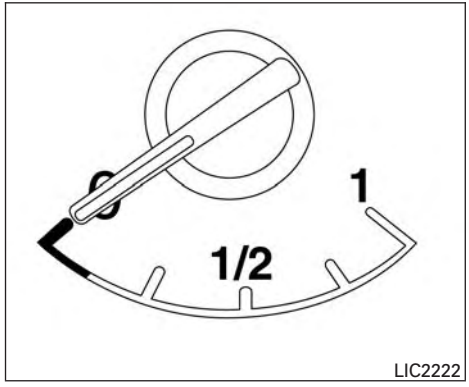

FUEL GAUGE

The gauge indicates the **approximate** fuel level in the tank.

The gauge may move slightly during braking, turning, acceleration, or going up or down hills.

The gauge needle returns to 0 (Empty) after the ignition switch is placed in the OFF position.

The low fuel warning message shows in the vehicle information display when the amount of fuel in the tank is getting low.

Refill the fuel tank before the gauge registers 0 (Empty).

The ◀⛽ indicates that the fuel-filler door is located on the driver's side of the vehicle.

⚠ CAUTION

- **If the vehicle runs out of fuel, the Malfunction Indicator Light (MIL) may come on. Refuel as soon as possible. After a few driving trips, the light should turn off. If the light remains on after a few driving trips, have the vehicle inspected. It is recommended that you visit a NISSAN dealer for this service.**
- **For additional information, refer to "Malfunction Indicator Light (MIL)" in this section.**

COMPASS (if so equipped)

This unit measures terrestrial magnetism and indicates the heading direction of the vehicle.

With the ignition placed in the ON position, press the -N- button as described in the charts below to activate various features of the automatic anti-glare rearview mirror.

Push and hold the -N- button for about:	Feature: (Push button again for about 1 second to change settings)
1 second	Compass display toggles on/off
8 seconds	Compass zone can be changed to correct false compass readings
10 seconds	Compass enters calibration mode

For additional information, refer to “Automatic anti-glare rearview mirror” in the “Pre-driving checks and adjustments” section of this manual.

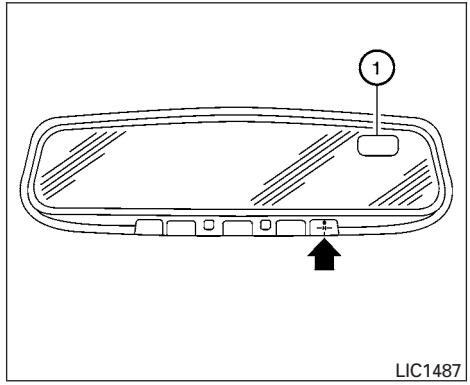

COMPASS DISPLAY

Press the -N- button for about one second when the ignition switch is placed in the ON position to toggle the compass direction display ① on or off. The display will indicate the direction that the vehicle is heading.

N: North
E: East
S: South
W: West

If the display reads “C”, calibrate the compass by driving the vehicle in three complete circles at less than 5 mph (8 km/h).

You can also calibrate the compass by driving your vehicle on your everyday route. The compass will be calibrated once it has tracked three complete circles.

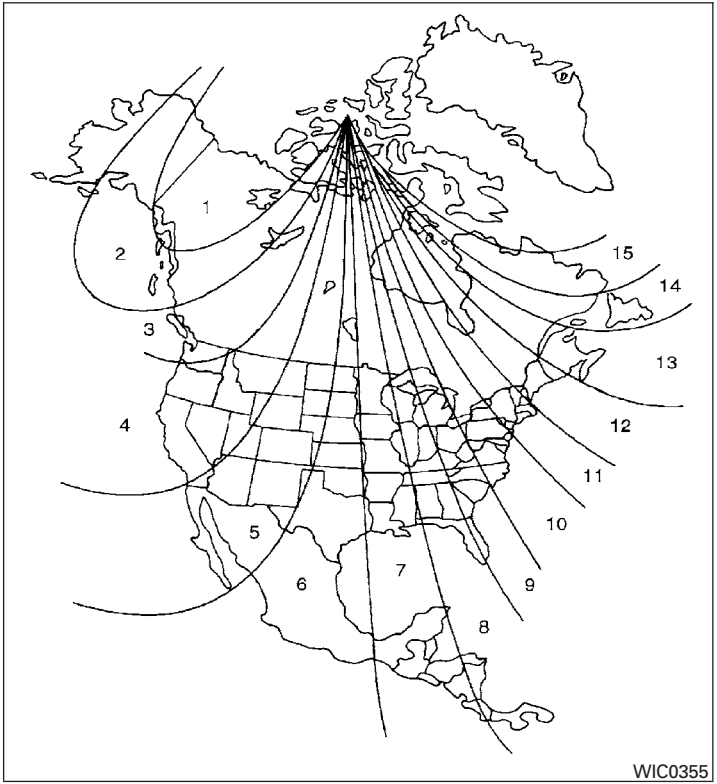

Zone variation change procedure

The difference between magnetic north and geographical north is known as variance. In some areas, this difference can sometimes be great enough to cause false compass readings. Follow these instructions to set the variance for your particular location if this happens:

1. Press and hold the button for about 8 seconds. The current zone number will appear in the display. Release the button.
2. Find your current location on the zone map. Refer to the illustration.
3. Press the button repeatedly to toggle through the zone numbers until the desired number appears in the display. Once you have selected a zone number, the display will show a compass direction within a few seconds.

NOTE:

Use zone number 5 for Hawaii.

Inaccurate compass direction

The compass display is equipped with automatic correction function. If the correct direction is not shown, follow this procedure.

1. With the display turned on, press and hold the button for about 9 seconds. The display will read “C.”
2. Calibrate the compass by driving the vehicle in three complete circles at a maximum speed of 5 mph (8 km/h).
3. After completing the circles the display should return to normal.

- If the compass deviates from the correct indication soon after repeated adjustment, have the system checked. It is recommended that you visit a NISSAN dealer for this service.
- The compass may not indicate the correct compass point in tunnels or while driving up or down a steep hill. (The compass returns to the correct compass point when the vehicle moves to an area where the geomagnetism is stabilized.)

CAUTION

- **Do not install a ski rack, antenna, etc., which are attached to the vehicle by means of a magnet. They affect the operation of the compass.**
- **When cleaning the mirror, use a paper towel or similar material dampened with glass cleaner. Do not spray glass cleaner directly on the mirror as it may cause the liquid cleaner to enter the mirror housing.**

ABS or (ABS) Anti-lock Braking System (ABS) warning light	Seat belt warning light and chime	O/D OFF Overdrive OFF indicator light
BRAKE or (!) Brake warning light	Supplemental air bag warning light	Security indicator light
Charge warning light	Front fog light indicator light (if so equipped)	Side light and headlight indicator light (green)
Forward Emergency Braking (FEB) system warning light (if so equipped)	Front passenger air bag status light	Slip indicator light
Low tire pressure warning light	High beam indicator light (blue)	TOW TOW mode ON indicator light
Master warning light	Hill descent control system ON indicator light (if so equipped)	Turn signal/hazard indicator lights
PS Power steering warning light	Malfunction Indicator Light (MIL)	OFF Vehicle Dynamic Control (VDC) OFF indicator light

CHECKING LIGHTS

With all doors closed, apply the parking brake, fasten the seat belts and place the ignition switch in the ON position without starting the engine. The following lights (if so equipped) will come on:

, BRAKE or (!) , , PS

The following lights (if so equipped) will come on briefly and then go off:

ABS or (ABS) , , , OFF , (!) , O/D OFF ,

If any light does not come on or operate in a way other than described, it may indicate a burned-out bulb and/or a system malfunction. Have the system checked. It is recommended that you visit a NISSAN dealer for this service.

Some indicators and warnings are also displayed on the vehicle information display between the speedometer and tachometer. For additional information, refer to “Vehicle information display” in this section.

WARNING LIGHTS

For additional information on warnings and indicators, refer to “Vehicle information display” in this section.

ABS or (ABS) Anti-lock Braking System (ABS) warning light

When the ignition switch is placed in the ON position, the ABS warning light illuminates and then turns off. This indicates the ABS is operational.

If the ABS warning light illuminates while the engine is running or while driving, it may indicate the ABS is not functioning properly. Have the system checked. It is recommended that you visit a NISSAN dealer for this service.

If an ABS malfunction occurs, the anti-lock function is turned off. The brake system then operates normally but without anti-lock assistance. For additional information, refer to “Brake system” in the “Starting and driving” section of this manual.

BRAKE or (!) Brake warning light

This light functions for both the parking brake and the foot brake systems.

Parking brake indicator

When the ignition switch is placed in the ON position, this light comes on when the parking brake is applied.

Low brake fluid warning light

When the ignition switch is placed in the ON position, the light warns of a low brake fluid level. If the light comes on while the engine is running, with the parking brake not applied, stop the vehicle and perform the following:

1. Check the brake fluid level. Add brake fluid as necessary. For additional information, refer to “Brake fluid” in the “Do-it-yourself” section of this manual.
2. If the brake fluid level is correct, have the warning system checked. It is recommended that you visit a NISSAN dealer for this service.

⚠ WARNING

- **Your brake system may not be working properly if the warning light is on. Driving could be dangerous. If you judge it to be safe, drive carefully to the nearest service station for repairs. Otherwise, have your vehicle towed because driving it could be dangerous.**
- **Pressing the brake pedal with the engine stopped and/or a low brake fluid level may increase your stopping distance and braking will require greater pedal effort as well as pedal travel.**
- **If the brake fluid level is below the MINIMUM or MIN mark on the brake fluid reservoir, do not drive until the brake system has been checked. It is recommended that you visit a NISSAN dealer for this service.**

Anti-lock Braking System (ABS) warning indicator

When the parking brake is released and the brake fluid level is sufficient, if both the brake warning light and the ABS warning light illuminate, it may indicate the ABS is not functioning properly. Have the brake system checked and, if necessary, repaired. It is recommended that you visit a NISSAN dealer for this service. Avoid

high-speed driving and abrupt braking. For additional information, refer to “Anti-lock Braking System (ABS) warning light” in this section.

Charge warning light

If this light comes on while the engine is running, it may indicate the charging system is not functioning properly. Turn the engine off and check the generator belt. If the belt is loose, broken, missing, or if the light remains on, have the system checked. It is recommended that you visit a NISSAN dealer for this service.

CAUTION

Do not continue driving if the generator belt is loose, broken or missing.

Forward Emergency Braking (FEB) system warning light (if so equipped)

This light comes on when the ignition switch is placed in the ON position. It turns off after the engine is started.

This light illuminates when the Forward Emergency Braking system is set to OFF on the meter display.

If the light illuminates when the Forward Emergency Braking system is on, it may indicate that the system is unavailable. For additional information, refer to “Forward Emergency Braking (FEB)” in the “Starting and driving” section of this manual.

Low tire pressure warning light

Your vehicle is equipped with a Tire Pressure Monitoring System (TPMS) that monitors the tire pressure of all tires except the spare.

The low tire pressure warning light warns of low tire pressure or indicates that the TPMS is not functioning properly.

After the ignition switch is placed in the ON position, this light illuminates for about 1 second and turns off.

Low tire pressure warning

If the vehicle is being driven with low tire pressure, the warning light will illuminate. A “Tire Pressure Low - Add Air” warning also appears in the vehicle information display.

When the low tire pressure warning light illuminates, you should stop and adjust the tire pressure of all four tires to the recommended COLD tire pressure shown on the Tire and Loading Information label located in the driver’s door opening. The low tire pressure warning light does not automatically turn off when the tire pressure is adjusted. After the tire is inflated to the recommended pressure, the vehicle must be driven at speeds above 16 mph (25 km/h) to activate the TPMS and turn off the low tire pressure warning light. Use a tire pressure gauge to check the tire pressure.

The “Tire Pressure Low - Add Air” warning appears each time the ignition switch is placed in the ON position as long as the low tire pressure warning light remains illuminated.

For additional information, refer to “Vehicle information display” in this section, “Tire Pressure Monitoring System (TPMS)” in the “Starting and driving” and “In case of emergency” sections of this manual.

TPMS malfunction

If the TPMS is not functioning properly, the low tire pressure warning light will flash for approximately 1 minute when the ignition switch is placed in the ON position. The light will remain on after 1 minute. Have the system checked. It is recommended that you visit a NISSAN dealer for this service. The ″Tire Pressure Low — Add Air″ warning does not appear if the low tire pressure warning light illuminates to indicate a TPMS malfunction.

For additional information, refer to “Tire Pressure Monitoring System (TPMS)” in the “Starting and driving” section and “Tire pressure” in the “Do-it-yourself” section of this manual.

⚠ WARNING

- **Radio waves could adversely affect electric medical equipment. Those who use a pacemaker should contact the electric medical equipment manufacturer for the possible influences before use.**
- **If the light does not illuminate with the ignition switch placed in the ON position, have the vehicle checked as soon as possible. It is recommended that you visit a NISSAN dealer for this service.**
- **If the light illuminates while driving, avoid sudden steering maneuvers or abrupt braking, reduce vehicle speed, pull off the road to a safe location and stop the vehicle as soon as possible. Driving with under-inflated tires may permanently damage the tires and increase the likelihood of tire failure. Serious vehicle damage could occur and may lead to an accident and could result in serious personal injury or death. Check the tire pressure for all four tires. Adjust the tire pressure to the recommended COLD tire pressure shown on the Tire and Loading Information label located in the driver’s door opening to turn the low tire pressure warning light off. If the light still illuminates while driving after adjusting the tire pressure, a tire may be flat or the TPMS may be malfunctioning. If you have a flat tire, replace it with a spare tire as soon as possible. If no tire is flat and all tires are properly inflated, have the vehicle checked. It is recommended that you visit a NISSAN dealer for this service.**
- **Since the spare tire is not equipped with the TPMS, when a spare tire is mounted or a wheel is replaced, the TPMS will not function and the low tire pressure warning light will flash for approximately 1 minute. The light will remain on after 1 minute. Have your tires replaced and/or TPMS system reset as soon as possible. It is recommended that you visit a NISSAN dealer for these services.**
- **Replacing tires with those not originally specified by NISSAN could affect the proper operation of the TPMS.**

⚠ CAUTION

- **The TPMS is not a substitute for the regular tire pressure check. Be sure to check the tire pressure regularly.**
- **If the vehicle is being driven at speeds of less than 16 mph (25 km/h), the TPMS may not operate correctly.**
- **Be sure to install the specified size of tires to the four wheels correctly.**

Master warning light

When the ignition is in the ON position, the master warning light illuminates if any of the following are displayed on the vehicle information display.

- No key warning
- Low fuel warning
- Low windshield-washer fluid warning
- Parking brake release
- Door open warning
- Check tire pressure warning

For additional information, refer to “Vehicle information display” in this section.

PS Power steering warning light

WARNING

- **If the engine is not running or is turned off while driving, the power assist for the steering will not work. Steering will be harder to operate.**
- **When the power steering warning light illuminates with the engine running, there will be no power assist for the steering. You will still have control of the vehicle, but the steering will be harder to operate. Have the power steering system checked. It is recommended that you visit a NISSAN dealer for this service.**

When the ignition switch is placed in the ON position, the power steering warning light illuminates. After starting the engine, the power steering warning light turns off. This indicates the power steering is operational.

If the power steering warning light illuminates while the engine is running, it may indicate the power steering is not functioning properly and may need servicing. Have the power steering checked. It is recommended that you visit a NISSAN dealer for this service.

When the power steering warning light illuminates with the engine running, there will be no power assist for the steering, but you will still have control of the vehicle. At this time, greater steering effort is required to operate the steering wheel, especially in sharp turns and at low speeds.

For additional information, refer to “Power steering” in the “Starting and driving” section of this manual.

Seat belt warning light and chime

The light and chime remind you to fasten your seat belts. The light illuminates whenever the ignition switch is placed in the ON or START position and remains illuminated until the driver’s seat belt is fastened. At the same time, the chime sounds for about 6 seconds unless the driver’s seat belt is securely fastened.

The seat belt warning light may also illuminate if the front passenger’s seat belt is not fastened when the front passenger’s seat is occupied . For 7 seconds after the ignition switch is placed in the ON position, the system does not activate the warning light for the front passenger.

For additional information, refer to “Seat belts” in the “Safety—Seats, seat belts and supplemental restraint system” section of this manual.

Supplemental air bag warning light

When the ignition switch is placed in the ON or START position, the supplemental air bag warning light illuminates for about 7 seconds and then turns off. This means the system is operational.

If any of the following conditions occur, the front air bag, side air bag, curtain air bag, and pretensioner seat belt systems need servicing:

- The supplemental air bag warning light remains on after approximately 7 seconds.
- The supplemental air bag warning light flashes intermittently.
- The supplemental air bag warning light does not come on at all.

It is recommended that you visit a NISSAN dealer for these services.

Unless checked and repaired, the supplemental restraint system (air bag system) and/or the pretensioner(s) may not function properly. For additional information, refer to “Supplemental Restraint System (SRS)” in the “Safety—Seats, seat belts and supplemental restraint system” section of this manual.

⚠WARNING

If the supplemental air bag warning light is on, it could mean that the front air bag, side air bag, curtain air bag and/or pretensioner systems will not operate in an accident. To help avoid injury to yourself or others, have your vehicle checked as soon as possible. It is recommended that you visit a NISSAN dealer for this service.

INDICATOR LIGHTS

For additional information, refer to “Vehicle information display” in this section.

Front fog light indicator light (if so equipped)

The front fog light indicator light illuminates when the front fog lights are on. For additional information, refer to “Fog light switch” in this section.

Front passenger air bag status light

The front passenger air bag status light will be lit and the passenger front air bag will be off depending on how the front passenger seat is being used.

For additional information, refer to “Front passenger air bag and status light” in the “Safety — Seats, seat belts and supplemental restraint system” section of this manual.

High beam indicator light (blue)

This blue light comes on when the headlight high beams are on and goes out when the low beams are selected.

The high beam indicator light also comes on when the passing signal is activated.

Hill descent control system ON indicator light (if so equipped)

When the ignition switch is placed in the ON position, this light comes on briefly and then turns off.

The light comes on when the hill descent control system is activated.

If the hill descent control switch is on and the indicator light blinks, the system is not engaged.

If the indicator light does not come on when the hill descent switch is on, the system may not be functioning properly. Have the system checked. It is recommended that you visit a NISSAN dealer for this service.

For additional information, refer to “Hill Descent Control (HDC) switch” in this section and “Hill descent control system” in the “Starting and driving” section of this manual.

Malfunction Indicator Light (MIL)

If this indicator light comes on steady or blinks while the engine is running, it may indicate a potential emission control malfunction.

The MIL may also come on steady if the fuel-filler cap is loose or missing, or if the vehicle runs out of fuel. Check to make sure the fuel-filler cap is installed and closed tightly, and that the vehicle has at least 3 gallons (11.4 liters) of fuel in the fuel tank.

After a few driving trips, the light should turn off if no other potential emission control system malfunction exists.

If this indicator light comes on steady for 20 seconds and then blinks for 10 seconds when the engine is not running, it indicates that the vehicle is not ready for an emission control system inspection/maintenance test. For additional information, refer to “Readiness for inspection/maintenance (I/M) test” in the “Technical and consumer information” section of this manual.

Operation

The MIL will come on in one of two ways:

- MIL on steady — An emission control system malfunction has been detected. Check the fuel-filler cap if the Loose Fuel Cap warning appears in the vehicle information display. If the fuel-filler cap is loose or missing, tighten or install the cap and continue to drive the vehicle. The light should turn off after a few driving trips. If the light does not turn off after a few driving trips, have the vehicle inspected. It is recommended that you visit a NISSAN dealer for this service. You do not need to have your vehicle towed to the dealer.
- MIL blinking — An engine misfire has been detected which may damage the emission control system. To reduce or avoid emission control system damage:
  - do not drive at speeds above 45 mph (72 km/h).
  - avoid hard acceleration or deceleration.
  - avoid steep uphill grades.
  - if possible, reduce the amount of cargo being hauled or towed.

The MIL may stop blinking and come on steady. Have the vehicle inspected. It is recommended that you visit a NISSAN dealer for this service. You do not need to have your vehicle towed to the dealer.

⚠ CAUTION

Continued vehicle operation without having the emission control system checked and repaired as necessary could lead to poor driveability, reduced fuel economy, and possible damage to the emission control system.

O/D OFF Overdrive OFF indicator light

The overdrive OFF indicator light illuminates when the overdrive OFF mode is selected.

For additional information, refer to “Driving the vehicle” in the “Starting and driving” section of this manual.

Security indicator light

This light blinks when the ignition switch is placed in the OFF, LOCK or ACC position.

The blinking security indicator light indicates that the security systems equipped on the vehicle are operational.

For additional information, refer to “Security systems” in this section.

Side light and headlight indicator light (green)

The side light and headlight indicator light illuminates when the side light or headlights are on (not including daytime running or signature lights). If the headlight switch is in the AUTO position, the side light and headlight indicator light will illuminate when the headlights turn on. For additional information, refer to “Headlight and turn signal switch” in this section.

Slip indicator light

This indicator will blink when the VDC system is operating, thus alerting the driver to the fact that the road surface is slippery and the vehicle is nearing its traction limits.

You may feel or hear the system working; this is normal.

The light will blink for a few seconds after the VDC system stops limiting wheel spin.

The indicator light also comes on when you place the ignition switch in the ON position. The light will turn off after approximately 2 seconds if the system is operational. If the light does not come on have the system checked. It is recommended that you visit a NISSAN dealer for this service.

TOW mode ON indicator light

This light comes on when the tow mode function is on.

For additional information, refer to “Tow mode switch” in this section.

Turn signal/hazard indicator lights

The appropriate light flashes when the turn signal switch is activated.

Both lights flash when the hazard switch is turned on.

Vehicle Dynamic Control (VDC) OFF indicator light

This indicator light comes on when the VDC OFF switch is pushed to off. This indicates the VDC system has been turned off.

Push the VDC OFF switch again or restart the engine and the system will operate normally. For additional information, refer to “Vehicle Dynamic Control (VDC) system” in the “Starting and driving” section of this manual.

The VDC indicator light also comes on when you place the ignition switch in the ON position. The light will turn off after about 2 seconds if the system is operational. If the light stays on or comes on along with the indicator light while you are driving, have the VDC system checked. It is recommended that you visit a NISSAN dealer for this service.

While the VDC system is operating, you might feel a slight vibration or hear the system working when starting the vehicle or accelerating, but this is normal.

AUDIBLE REMINDERS

Brake pad wear warning

The disc brake pads have audible wear warnings. When a disc brake pad requires replacement, it makes a high pitched scraping sound when the vehicle is in motion, whether or not the brake pedal is depressed. Have the brakes checked as soon as possible if the warning sound is heard. It is recommended that you visit a NISSAN dealer for this service.

Key reminder chime

A chime sounds if the driver’s door is opened while the ignition switch is placed in the ACC or OFF position or placed in the OFF or LOCK position with the Intelligent Key left in the vehicle. Make sure the ignition switch is placed in the LOCK position, and take the Intelligent Key with you when leaving the vehicle.

Light reminder chime

With the ignition switch placed in the OFF position, a chime sounds when the driver's door is opened if the headlights or parking lights are on.

Turn the headlight control switch off or to AUTO before leaving the vehicle.

NISSAN Intelligent Key® door buzzer (if so equipped)

The Intelligent Key door buzzer sounds if any one of the following improper operations is found.

- The Intelligent Key is left inside the vehicle when locking the doors.
- Any doors are not closed securely when locking the doors.

When the buzzer sounds, be sure to check both the vehicle and the Intelligent Key. For additional information, refer to "NISSAN Intelligent Key®" in the "Pre-driving checks and adjustments" section of this manual.

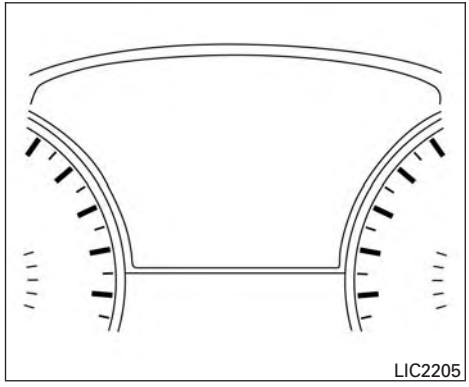

The vehicle information display is located to the left of the speedometer. It displays such items as:

- Vehicle settings
- Trip computer information
- Drive system warnings and settings (if so equipped)
- Blind Spot Warning (BSW) information (if so equipped)
- Rear Cross Traffic Alert (RCTA) (if so equipped)
- Cruise control system information (if so equipped)
- Intelligent Cruise Control (ICC) system information (if so equipped)
- NISSAN Intelligent Key® operation information
- Indicators and warnings
- Tire Pressure information

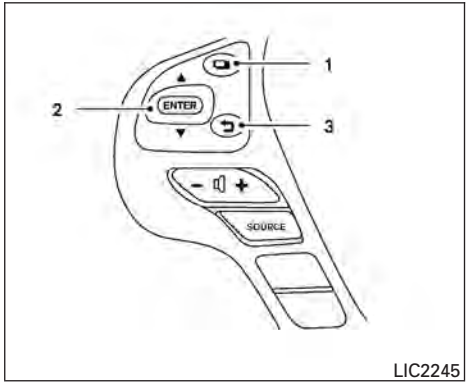

HOW TO USE THE VEHICLE INFORMATION DISPLAY

The vehicle information display can be navigated using the ❑ , ▲▼ , ENTER , and ↩ buttons located on the steering wheel.

1. ❑ — select/enter the vehicle information display menu items or to change from one display screen to the next (i.e. trip, settings, fuel economy)
2. ▲▼ — navigate through the items in the vehicle information display

   ENTER — change or select an item in the vehicle information display
3. ↩ — go back to the previous menu

The ENTER and ▲▼ buttons also control audio and control panel functions. For additional information, refer to “Steering wheel switch for audio control” in the “Monitor, climate, audio, phone and voice recognition systems” section of this manual.

STARTUP DISPLAY

When the vehicle in placed in the ON or ACC position the screens that display in the vehicle information include:

- Active system status (if so equipped)
- Trip computer
- Tire pressure information
- 4WD (if so equipped)
- Fuel economy
- Distance to empty
- Warnings

Warnings will only display if there are any present. For additional information on warnings and indicators refer to “Vehicle information display warnings and indicators” in this section.

To control what items display in the vehicle information display, refer to “Main menu selection” in this section.

RESETTING THE TRIP COMPUTER

1. Press the ❑ button until you reach the trip computer mode.
2. Press the ❑ button again for more than 1.5 seconds to reset average fuel consumption, average speed, distance to empty, and journey time.

SETTINGS

The setting mode allows you to change the information displayed in the vehicle information display:

- Driver Assistance (if so equipped)
- Vehicle Settings
- Main Menu Selection
- Body Color
- Maintenance
- Alarms
- Language
- Units
- Welcome Effect
- Factory Reset

Driver Assistance (if so equipped)

The driver assistance menu allows the user to change the various driving aids, parking aids and braking features.

Menu item		Result
Driving Aids (if so equipped)		Displays available Driving Aids
	Blind Spot	Allows user to turn Blind Spot Warning system on or off. For additional information, refer to “Blind Spot Warning (BSW)” in the “Starting and driving” section of this manual
Parking Aids (if so equipped)		Displays available parking aids
	Sensor	Allows user to turn the parking sensor on or off
	Display	Allows user to turn the parking sensor display on or off
	Volume	Allows user to change the volume of the parking aid chimes
	Range	Allows user to select the range in which the parking sensors will activate
Emergency Braking (if so equipped)		Displays the available emergency braking options
	System	Allows user to turn the emergency braking system on or off

Vehicle Settings

The vehicle settings menu allows the user to change the settings for lights, wipers, locking, keys, and other vehicle settings.

Menu item		Result
Welcome Light		Allows user to turn the welcome light on or off
Auto Room Lamp		Allows user to turn the auto room lamp on or off
Light Sensitivity		Allows user to change when the lights illuminate based on the brightness outside the vehicle
Light Off Delay		Allows user to change the duration of time that the automatic headlights stay on after the vehicle is shut off
Wiper with Speed (if so equipped)		Allows user to turn the wiper with speed feature on or off
I-Key Door Lock		Allows user to turn I-key door lock on or off. When turned on, the request switch on the door is activated.
Selective Unlock		Allows user to turn selective unlock feature on or off. When this item is turned on, only the driver's door is unlocked first after the door unlock operation. When the door handle request switch on the driver's or front passenger's side door is pushed to be unlocked, only the corresponding door is unlocked first. All the doors can be unlocked if the door unlock operation is performed again within 1 minute. When this item is turned off, all the doors will be unlocked after the door unlock operation is performed once.
Auto Door Unlock		Displays the available auto door unlock options
	OFF	Doors will have to be manually unlocked
	IGN Off	Doors will unlock when the ignition is turned off
	Shift into P	Doors will unlock when the vehicle is shifted into P (Park)
Answer Back Horn		Allows user to turn the answer back horn feature on or off
Remote Start (if so equipped)		Allows user to turn the remote engine start feature on or off. When turned off, the vehicle cannot be started remotely.
Battery Saver		Allows user to turn the battery saver feature on or off
Exit Seat Slide (if so equipped)		When the exit seat slide is on the driver's seat will move backward for easy exit when the ignition switch is placed in the OFF position and the driver's door is opened. After getting into the vehicle and placing the ignition switch in the ACC position, the driver's seat will move to the previous set position. For additional information, refer to "Automatic drive positioner" in the "Pre-driving checks and adjustments" section of this manual.
Exit Steering Up (if so equipped)		When the exit steering up feature is turned on, the steering wheel moves upward for easy exit when the ignition switch is in the OFF position and the driver's door is opened. After getting into the vehicle and placing the ignition switch in the ACC position, the steering wheel moves to the previous position. For additional information, refer to "Automatic drive positioner" in the "Pre-driving checks and adjustments" section of this manual.

Main Menu Selection

The main menu selection menu allows the user to customize the information that appears in the vehicle information display when the ignition is placed in the ON position.

Menu item	Result
Driver Assistance (if so equipped)	Allows user to turn the driver assistance display on or off
Trip Computer	Allows user to turn the trip computer display on or off
Tire Pressures	Allows user to turn the tire pressures display on or off
4WD (if so equipped)	Allows user to turn the 4WD display on or off
Audio	Allows user to turn the audio display on or off
Navigation (if so equipped)	Allows user to turn the navigation display on or off
Fuel Economy	Allows user to turn the fuel economy display on or off

Body Color

The body color menu allows the user to select the color of vehicle that appears in the vehicle information display

Menu item	Result
Body Color	Displays the available colors for the vehicle in the vehicle information display

Maintenance

The maintenance menu allows the user to set reminders for various vehicle maintenance items.

⚠ WARNING

The tire replacement indicator is not a substitute for regular tire checks, including tire pressure checks. For additional information, refer to "Changing wheels and tires" in the "Do-it-yourself" section of this manual. Many factors including tire inflation, alignment, driving habits and road conditions affect tire wear and when tires should be replaced. Setting the tire replacement indicator for a certain driving distance does not mean your tires will last that long. Use the tire replacement indicator as a guide only and always perform regular tire checks. Failure to perform regular tire checks, including tire pressure checks could result in tire failure. Serious vehicle damage could occur and may lead to a collision, which could result in serious personal injury or death.

Menu item	Result
Service	This indicator appears when the customer set distance is reached for checking or replacing maintenance items other than the engine oil, oil filter and tires. Other maintenance items can include such things as air filter or tire rotation. You can set or reset the distance for checking or replacing the items. You can set or reset the distance for service type items. For scheduled maintenance items and intervals, refer to the "Maintenance and schedules" section of this manual.
Tire	This indicator appears when the customer set distance is reached for replacing tires. You can set or reset the distance for replacing tires.
Other	This indicator appears when the customer set distance is reached for checking or replacing maintenance items other than the engine oil, oil filter and tires. Other maintenance items can include such things as air filter or tire rotation. The distance for checking or replacing the items can be set or reset.

Alarms

The alarms menu allows the user to set various alerts.

Menu item	Result
Outside Temp.	Allows user to turn the outside temp. alarm on or off
Timer Alert	Allows user to set the timer alert for a specific interval

Language

The language menu allows the user to change the languages displayed in the vehicle information display.

Menu item	Result
Language	Displays available language options for the vehicle information display

Unit

The unit menu allows the user to customize the information that appears in the vehicle information display.

Menu item	Result
Mileage	Displays available mileage options shown in the vehicle information display
Tire Pressures	Displays available tire pressures options shown in the vehicle information display
Temperature	Displays available temperature options shown in the vehicle information display

Welcome Effect

The welcome effect menu allows the user to control the welcome effect feature.

Menu item	Result
Welcome Effect	Allows user to turn the welcome effect feature on or off

Factory Reset

The factory reset menu allows the user to restore the vehicle information display settings to factory status.

Menu item	Result
Factory Reset	Allows user to reset the vehicle information display settings to the original factory settings. Once selected, the user can confirm or deny the reset.

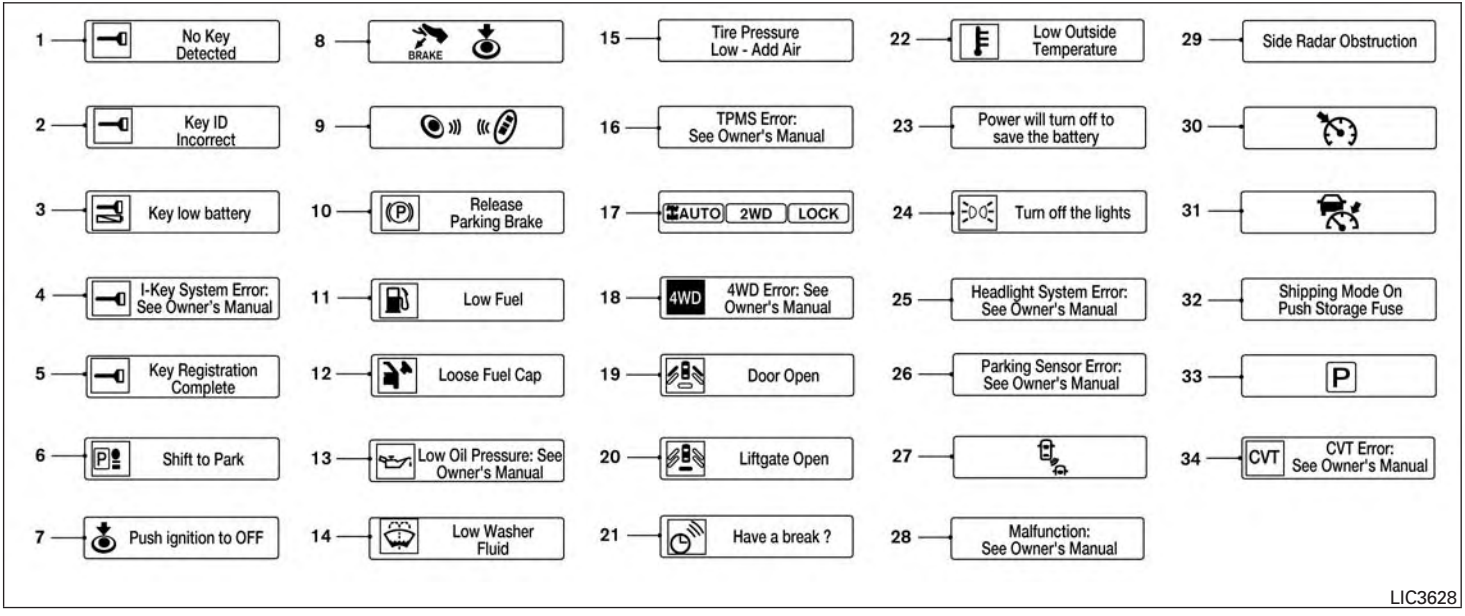

VEHICLE INFORMATION DISPLAY WARNINGS AND INDICATORS

1. No Key Detected
2. Key ID Incorrect
3. Key low battery
4. I-Key System Error: See Owner's Manual
5. Key Registration Complete
6. Shift to Park
7. Push Ignition to OFF
8. Push brake and start switch to drive
9. Engine start operation for Intelligent Key system (if I-Key battery is low)
10. Release Parking Brake
11. Low Fuel

12. Loose Fuel Cap
13. Low Oil Pressure: See Owner's Manual
14. Low Washer Fluid
15. Tire Pressure Low - Add Air
16. TPMS Error: See Owner's Manual
17. 4x4–i indicators (if so equipped)
18. 4WD Error: See Owner's Manual (if so equipped)
19. Door Open
20. Liftgate Open
21. Timer Alert – Have a break?
22. Low Outside Temperature
23. Power will turn off to save the battery
24. Turn off the lights
25. Headlight System Error: See Owner's Manual (if so equipped)
26. Parking Sensor Error: See Owner's Manual (if so equipped)
27. Blind Spot Warning (BSW) and Rear Cross Traffic Alert (RCTA) indicator (if so equipped)
28. Malfunction: See Owner's Manual (if so equipped)
29. Side Radar Obstruction (if so equipped)
30. Cruise control indicator (if so equipped)
31. Intelligent Cruise Control (ICC) indicator (if so equipped)
32. Shipping Mode On Push Storage Fuse
33. Transmission Shift Position indicator
34. CVT Error: See Owner's Manual

No Key Detected

This warning appears when the Intelligent Key is left outside the vehicle with the ignition switch in the ON position. Make sure the Intelligent Key is inside the vehicle.

For additional information, refer to "NISSAN Intelligent Key®" in the "Pre-driving checks and adjustments" section of this manual.

Key ID Incorrect

This warning appears when the ignition switch is placed from the OFF position and the Intelligent Key is not recognized by the system. You cannot start the engine with an unregistered key.

For additional information, refer to "NISSAN Intelligent Key®" in the "Pre-driving checks and adjustments" section of this manual.

Key low battery

This indicator illuminates when the Intelligent Key battery is running out of power.

If this indicator illuminates, replace the battery with a new one. For additional information, refer to "Battery replacement" in the "Do-it-yourself" section of this manual.

I-Key System Error: See Owner's Manual

After the ignition switch is pushed to the ON position, this light comes on for a period of time and then turns off.

The I-Key System Error message warns of a malfunction with the Intelligent Key system. If the light comes on while the engine is stopped, it may be impossible to start the engine.

If the light comes on while the engine is running, you can drive the vehicle. However in these cases, have the system checked. It is recommended that you visit a NISSAN dealer for this service.

Key Registration Complete

This appears when a new Intelligent Key is registered to the vehicle.

Shift to Park

This warning illuminates when the ignition switch is in the ACC or OFF position and the shift lever is not in the P (Park) position. Also, a chime sounds when the ignition switch is in the ACC or OFF position.

If this warning illuminates, move the shift lever to the P (Park) position and start the engine.

Push Ignition to OFF

After the Push Ignition to OFF warning illuminates, the warning will illuminate if the ignition switch is placed in the ACC position when the shift lever is moved to the P (Park) position.

To turn off the Push warning, place the ignition switch in the ON position and then in the LOCK position.

Push brake and start switch to drive

This indicator appears when the shift lever is in the P (Park) position.

This indicator also appears when the vehicle has been started using the remote engine start (if so equipped) function.

This indicator means that the engine will start by pushing the ignition switch with the brake pedal depressed. You can start the engine from any position of the ignition switch.

Engine start operation for Intelligent Key system (if I-Key battery level is low)

This indicator appears when the battery of the Intelligent Key is low and when the Intelligent Key system and the vehicle are not communicating normally.

If this appears, touch the ignition switch with the Intelligent Key while depressing the brake pedal. For additional information, refer to “NISSAN Intelligent Key® battery discharge” in the “Starting and driving” section of this manual.

Release Parking Brake

This warning illuminates in the message area of the vehicle information display when the parking brake is set and the vehicle is driven.

Low Fuel

This warning illuminates when the fuel level in the fuel tank is getting low. Refuel as soon as it is convenient, preferably before the fuel gauge reaches 0 (Empty). **There will be a small reserve of fuel in the tank when the fuel gauge needle reaches 0 (Empty).**

Loose Fuel Cap

This warning appears when the fuel-filler cap is not tightened correctly after the vehicle has been refueled. For additional information, refer to “Fuel-filler cap” in the “Pre-driving checks and adjustments” section of this manual.

Low Oil Pressure: See Owner’s Manual

This warning appears in the message area of the vehicle information display if low oil pressure is detected. This gauge is not designed to indicate low oil level. **The low oil pressure warning is not designed to indicate a low oil level.** Use the dipstick to check the oil level. For additional information, refer to “Engine oil” in the “Do-it-yourself” section of this manual.

Low Washer Fluid

This warning illuminates when the windshield-washer fluid is at a low level. Add windshield-washer fluid as necessary. For additional information, refer to “Windshield-washer fluid” in the “Do-it-yourself” section of this manual.

Tire Pressure Low - Add Air

This warning appears when the low tire pressure warning light in the meter illuminates and low tire pressure is detected. The warning appears each time the ignition switch is placed in the ON position as long as the low tire pressure warning light remains illuminated. If this warning appears, stop the vehicle and adjust the tire pressures of all four tires to the recommended COLD tire pressure shown on the Tire and Loading Information label. For additional information, refer to

“Low tire pressure warning light” in this section and “Tire Pressure Monitoring System (TPMS)” in the “Starting and driving” section of this manual.

TPMS Error: See Owner’s Manual

This warning appears when there is an error with your TPMS. If this warning comes on, have the system checked. It is recommended that you visit a NISSAN dealer for this service.

4x4–i indicators (if so equipped)

These indicators show the Intelligent 4WD system status while the engine is running.

For additional information, refer to “Intelligent 4WD” in the “Starting and driving” section of this manual.

4WD Error: See Owner’s Manual (if so equipped)

This warning appears when the 4-wheel drive system is not functioning properly. For additional information, refer to “Intelligent 4WD” in the “Starting and driving” section of this manual.

Door Open

This warning illuminates when a door has been opened.

Liftgate Open

This warning illuminates when the liftgate has been opened.

Timer Alert — Have a break?

This indicator appears when the set time is reached. The time can be set up to six hours. For additional information, refer to “Settings” in this section.

Low Outside Temperature

This warning appears if the outside temperature is below 37°F (3°C). The temperature can be changed to display in Celsius or Fahrenheit. For additional information, refer to “Settings” in this section.

Power will turn off to save the battery

This message appears in the vehicle information display after a period of time if the ignition switch is in the ACC or the ON position and if the vehicle is in P (Park). For additional information, refer to “Push-button ignition switch positions” in the “Starting and driving” section of this manual.

Turn off the lights

This warning appears when the headlights are left in the ON position when exiting the vehicle. Place the headlight switch to OFF or AUTO position. For additional information, refer to “Headlight and turn signal switch” in this section.

Headlight System Error: See Owner’s Manual (if so equipped)

This warning illuminates when there is an error with the system. For additional information, refer to “Headlight and turn signal switch” in this section.

Parking Sensor Error: See Owner’s Manual (if so equipped)

This warning illuminates when there is an error with the system. For additional information, refer to “Rear Sonar System (RSS)” in the “Starting and driving” section of this manual.

Blind Spot Warning (BSW) and Rear Cross Traffic Alert (RCTA) indicator (if so equipped)

This indicator shows when the BSW and RCTA systems are engaged.

For additional information, refer to “Blind Spot Warning (BSW)” and “Rear Cross Traffic Alert (RCTA)” in the “Starting and driving” section of this manual.

Malfunction: See Owner's Manual (if so equipped)

This warning appears when one or more of the following systems (if so equipped) is not functioning properly:

- Blind Spot Warning (BSW)
- Rear Cross Traffic Alert (RCTA)

If one or more of these warning appears, have the system checked. It is recommended that you visit a NISSAN dealer for this service.

Side Radar Obstruction (if so equipped)

This warning appears when there is radar blockage detected. For additional information, refer to "Blind Spot Warning (BSW)" in the "Starting and driving" section of this manual.

Cruise control indicator (if so equipped)

This indicator shows the cruise control system status.

When cruise control is activated, a green circle will illuminate to indicate it is set. The vehicle information display will also display the speed the cruise control was set at. If you accelerate past the set speed, the speed will blink until you either cancel cruise control or go back to the set speed. If cruise control is on and canceled, the speed will be displayed to show the speed the vehicle will return to if the resume button is activated.

Intelligent Cruise Control (ICC) indicator (if so equipped)

This indicator shows the Intelligent Cruise Control (ICC) system status. The status is shown by the color. For additional information, refer to "Intelligent Cruise Control (ICC)" in the "Starting and driving" section of this manual.

Shipping Mode On Push Storage Fuse

This warning may appear if the extended storage switch is not pushed in. When this warning appears, push in the extended storage switch to turn off the warning. For additional information, refer to "Extended storage switch" in this section.

Transmission Shift Position indicator

This indicator shows the transmission shift position.

CVT Error: See Owner's Manual

This warning illuminates when there is a problem with the CVT system. If this warning comes on, have the system checked. It is recommended that you visit a NISSAN dealer for this service.

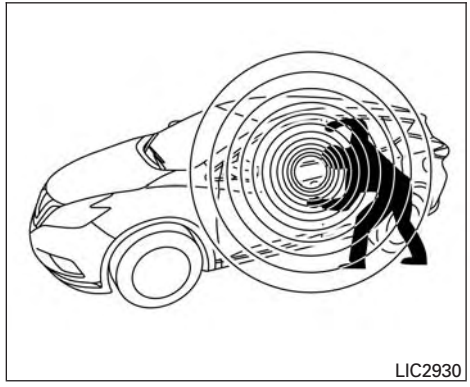

Your vehicle has two types of security systems:

- Vehicle security system
- NISSAN Vehicle Immobilizer System

VEHICLE SECURITY SYSTEM

The vehicle security system provides visual and audible alarm signals if someone opens the doors, liftgate, or hood when the system is armed. It is not, however, a motion detection type system that activates when a vehicle is moved or when a vibration occurs.

The system helps deter vehicle theft but cannot prevent it, nor can it prevent the theft of interior or exterior vehicle components in all situations. Always secure your vehicle even if parking for a brief period. Never leave your Intelligent Key in the vehicle, and always lock the vehicle when unattended. Be aware of your surroundings, and park in secure, well-lit areas whenever possible.

Many devices offering additional protection, such as component locks, identification markers, and tracking systems, are available at auto supply stores and specialty shops. A NISSAN dealer may also offer such equipment. Check with your insurance company to see if you may be eligible for discounts for various theft protection features.

How to arm the vehicle security system

1. Close all windows. **(The system can be armed even if the windows are open.)**
2. Remove the Intelligent Key from the vehicle.
3. Close all doors, hood and liftgate. Lock all doors. The doors can be locked with the Intelligent Key, door handle request switch, or mechanical key.
4. Confirm that the security indicator light stays on for about 30 seconds. The vehicle security system is now pre-armed. The vehicle security system will automatically shift into the armed phase. The security light begins to flash once every three seconds. If during the pre-armed phase one of the following occurs, the system will not arm:
   - Any door is unlocked with the mechanical key, the Intelligent Key or door request switch.
   - Ignition switch is placed in ACC or ON position.
   - **Even when the driver and/or passengers are in the vehicle, the system will activate with all the doors, hood and liftgate locked with the ignition switch placed in the LOCK position. When placing the ignition switch in the ACC or ON position, the system will be released.**

Vehicle security system activation

The vehicle security system will give the following alarm:

- The hazard lights blink (for non I-key vehicle) or the headlights (for I-key vehicle) blink and the horn sounds intermittently.
- The alarm automatically turns off after a period of time. However, the alarm reactivates if the vehicle is tampered with again. The alarm can be shut off by unlocking the driver's door by pressing the button on the key fob or placing the ignition switch in the ON or ACC position.

The alarm is activated by:

- opening a door without using the key fob (even if the door is unlocked by using the inside lock knob or the power door lock switch).

How to stop an activated alarm

The alarm stops only by unlocking a door or the liftgate with the mechanical key, pressing the button on the Intelligent Key, or pushing the request switch on the driver's or passenger's door with the Intelligent Key in range of the door handle.

NISSAN VEHICLE IMMOBILIZER SYSTEM

The NISSAN Vehicle Immobilizer System will not allow the engine to start without the use of a registered key.

If the engine fails to start using a registered key (for example, when interference is caused by another registered key, an automated toll road

device or automatic payment device on the key ring), restart the engine using the following procedures:

1. Leave the ignition switch in the ON position for approximately 5 seconds.
2. Place the ignition switch in the OFF or LOCK position and wait approximately 10 seconds.
3. Repeat steps 1 and 2.
4. Restart the engine while holding the device (which may have caused the interference) separate from the registered key.

If the no start condition re-occurs, NISSAN recommends placing the registered key on a separate key ring to avoid interference from other devices.

Never leave these keys in the vehicle.

FCC Notice:

For USA:

This device complies with Part 15 of the FCC Rules. Operation is subject to the following two conditions: (1) This device may not cause harmful interference, and (2) this device must accept any interference received, including interference that may cause undesired operation.

NOTE:

Changes or modifications not expressly approved by the party responsible for compliance could void the user's authority to operate the equipment.

For Canada:

This device complies with Industry Canada license-exempt RSS standard(s). Operation is subject to the following two conditions: (1) this device may not cause interference, and (2) this device must accept any interference received, including interference that may cause undesired operation of the device.

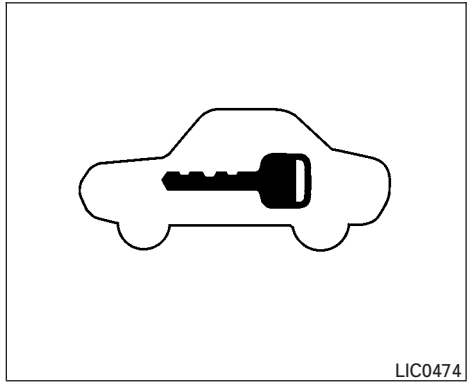

Security indicator light

The security indicator light blinks whenever the ignition switch is placed in the OFF, LOCK or ACC position.

This function indicates the NISSAN Vehicle Immobilizer System is operational.

If the NISSAN Vehicle Immobilizer System is malfunctioning, the light will remain on while the ignition switch is placed in the ON position.

If the light still remains on and/or the engine will not start, seek service for the NISSAN Vehicle Immobilizer System service as soon as possible. Please bring all registered keys that you have. It is recommended that you visit a NISSAN dealer for this service.

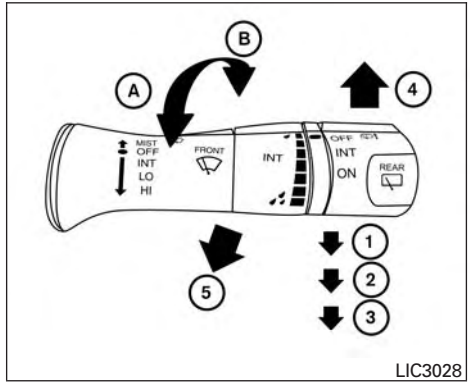

SWITCH OPERATION

⚠ WARNING

In freezing temperatures the washer solution may freeze on the windshield and obscure your vision which may lead to an accident. Warm the windshield with the defroster before you wash the windshield.

⚠ CAUTION

- **Do not operate the washer continuously for more than 30 seconds.**
- **Do not operate the washer if the windshield-washer fluid reservoir is empty.**
- **Do not fill the windshield-washer fluid reservoir with windshield-washer fluid concentrates at full strength. Some methyl alcohol based windshield-washer fluid concentrates may permanently stain the grille if spilled while filling the windshield-washer fluid reservoir.**
- **Pre-mix windshield-washer fluid concentrates with water to the manufacturer's recommended levels before pouring the fluid into the windshield-washer fluid reservoir. Do not use the windshield-washer fluid reservoir to mix the windshield-washer fluid concentrate and water.**

NOTE:

If the windshield wiper operation is interrupted by snow or ice, the wiper may stop moving to protect its motor. If this occurs, turn the wiper switch to the OFF position and remove the snow or ice that is on and around the wiper arms. In approximately 1 minute, turn the switch on again to operate the wiper.

The windshield wiper and washer operates when the ignition switch is in the ON position.

Push the lever down to operate the wiper at the following speed:

① Intermittent (INT) — intermittent operation can be adjusted by turning the knob toward Ⓐ (Slower) or Ⓑ (Faster). Also, the intermittent operation speed varies in accordance with the vehicle speed (if so equipped). (For example, when the vehicle speed is high, the intermittent operation speed will be faster.)

② Low (LO) — continuous low speed operation

③ High (HI) — continuous high speed operation

Push the lever up ④ to have one sweep operation (MIST) of the wiper.

Pull the lever toward you ⑤ to operate the washer. The wiper will also operate several times.

NOTE:

The Wiper with Speed feature may be disabled. For additional information, refer to "Vehicle information display" in this section.

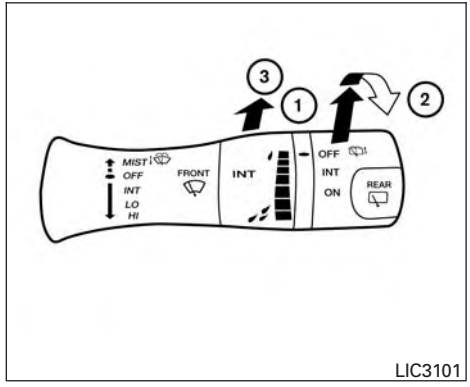

LIC3101

REAR SWITCH OPERATION

⚠WARNING

In freezing temperatures the washer solution may freeze on the rear window and obscure your vision which may lead to an accident. Warm the rear window with the defroster before you wash the rear window.

⚠ CAUTION

- **Do not operate the washer continuously for more than 30 seconds.**
- **Do not operate the washer if the windshield-washer fluid reservoir is empty.**
- **Do not fill the windshield-washer fluid reservoir with windshield-washer fluid concentrates at full strength. Some methyl alcohol based windshield-washer fluid concentrates may permanently stain the grille if spilled while filling the windshield-washer fluid reservoir.**
- **Pre-mix windshield-washer fluid concentrates with water to the manufacturer's recommended levels before pouring the fluid into the windshield-washer fluid reservoir. Do not use the windshield-washer fluid reservoir to mix the windshield-washer fluid concentrate and water.**

If the rear window wiper operation is interrupted by snow, etc., the wiper may stop moving to protect its motor. If this occurs, turn the wiper switch to OFF and remove the snow, etc. on and around the wiper arms. After about 1 minute, turn the switch on again to operate the wiper.

The rear window wiper and washer operate when the ignition switch is in the ON position. Turn the switch clockwise from the OFF position to operate the wiper.

① Intermittent (INT) — intermittent operation (not adjustable)

② Low (ON) — continuous low speed operation

Push the switch forward ③ to operate the washer. The wiper will also operate several times.

REAR WINDOW AND OUTSIDE MIRROR (if so equipped) DEFROSTER SWITCH

LIC1388

To defrost the rear window glass and outside mirrors (if so equipped), start the engine and push the rear window defroster switch on. The rear window defroster indicator light on the switch comes on. Push the switch again to turn the defroster off.

The rear window defroster automatically turns off after approximately 15 minutes.

⚠ CAUTION

When cleaning the inner side of the rear window, be careful not to scratch or damage the rear window defroster.

NOTE:

The top and bottom few rows of wires on the rear window are not part of the rear window defroster system. These wires make up the antenna for the audio system.

HEADLIGHT AND TURN SIGNAL SWITCH

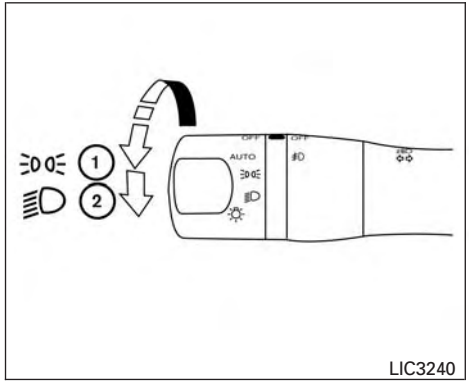

Type A (if so equipped)

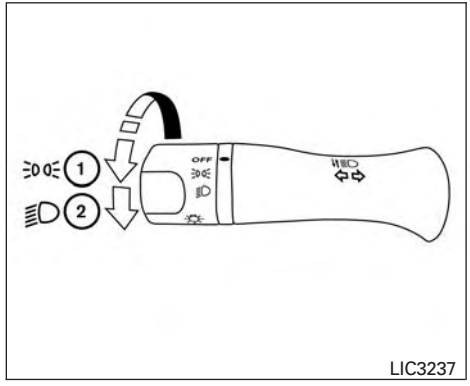

Type B (if so equipped)

HEADLIGHT CONTROL SWITCH

Lighting

① Rotate the switch to the position, and the front parking, tail, license plate, and instrument panel lights will come on.

② Rotate the switch to the position, and the headlights will come on and all the other lights remain on.

⚠ CAUTION

Use the headlights with the engine running to avoid discharging the vehicle battery.

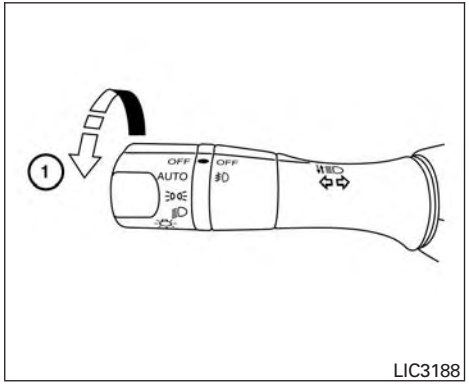

LIC3188

Autolight system (if so equipped)

The autolight system allows the headlights to turn on and off automatically. The autolight system can:

- Turn on the headlights, front parking, tail, license plate and instrument panel lights automatically when it is dark.
- Turn off all the lights when it is light.
- Keep all the lights on for a period of time after you place the ignition switch in the OFF position and all doors are closed.
- Turn on the headlights if the windshield wipers make four continuous passes within one minute of the first pass (if so equipped). The headlights remain on until the wipers are turned off for longer that 3 seconds.

NOTE:

Autolight activation sensitivity and the time delay for autolight shutoff can be adjusted. For additional information, refer to "Vehicle information display" in this section.

To turn on the autolight system:

- Place the headlight switch in the AUTO position ①.
- Place the ignition switch in the ON position.
- The autolight system automatically turns the headlights on and off.

Initially, if the ignition switch is turned OFF and a door is opened and left open, the headlights remain ON for a period of time. If another door is opened while the headlights are on, then the timer is reset.

To turn the autolight system off, place the switch in the OFF, , or position.

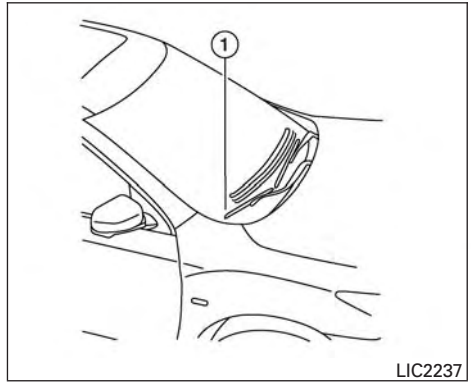

LIC2237

Be sure you do not put anything on top of the autolight sensor located in the top side of the instrument panel ①. The autolight sensor controls the autolight; if it is covered, the autolight sensor reacts as if it is dark out and the headlights will illuminate. If this occurs while parked with the engine off and the ignition switch placed in the ON position, your vehicle's battery could become discharged.

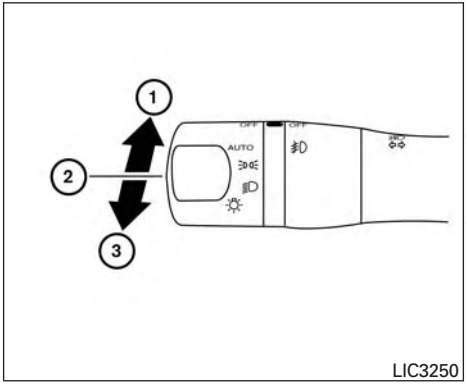

LIC3250

Headlight beam select

① To select the high beam function, push the lever forward while the low beams are on. The high beam lights come on and the indicator light illuminates.

② Pull the lever back to return to the low beam.

③ Pulling and releasing the lever flashes the headlight high beams on and off. The low beams do not need to be on for this to function.

Battery saver system

If the ignition switch is placed in the OFF position while the headlight switch is in the or position, the headlights will turn off after a period of time.

⚠CAUTION

Even though the battery saver feature automatically turns off the headlights after a period of time, you should turn the headlight switch to the OFF position when the engine is not running to avoid discharging the vehicle battery.

LED DAYTIME RUNNING LIGHTS (DRL)

The LED portion of the headlights automatically illuminate at 100% intensity when the engine is started and the parking brake is released. The LED Daytime Running Lights (DRL) operate with the headlight switch in the OFF position. When you turn the headlight switch to the position for full illumination, the LED lights switch from LED DRL to the park function.

If the parking brake is applied before the engine is started, the LED DRL do not illuminate. The LED DRL illuminate when the parking brake is released. The LED DRL remain on until the ignition is placed in the OFF position.

It is necessary at dusk to turn the headlight switch on for interior controls and switches to illuminate, as those remain off while the switch is in the OFF position.

⚠WARNING

When the LED DRL system is active, tail lights on your vehicle are not on. It is necessary at dusk to turn on your headlights. Failure to do so could cause an accident injuring yourself and others.

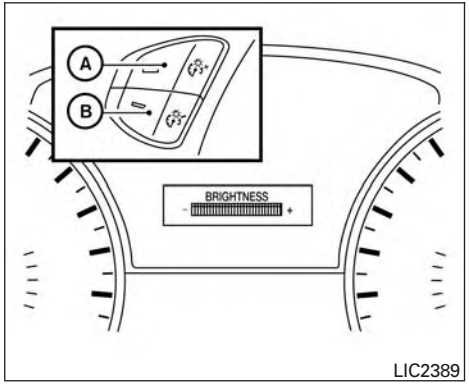

LIC2389

INSTRUMENT BRIGHTNESS CONTROL

Press the "+" button Ⓐ to increase the brightness of instrument panel lights.

Press the "-" button Ⓑ to decrease the brightness of instrument panel lights.

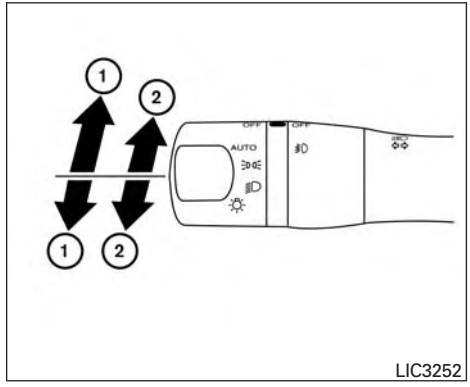

LIC3252

TURN SIGNAL SWITCH

Turn signal

① Move the lever up or down to signal the turning direction. When the turn is completed, the turn signal cancels automatically.

Lane change signal

② Move the lever up or down until the turn signal begins to flash, but the lever does not latch, to signal a lane change. Hold the lever until the lane change is completed.

Move the lever up or down until the turn signal begins to flash, but the lever does not latch, and release the lever. The turn signal will automatically flash three times.

Choose the appropriate method to signal a lane change based on road and traffic conditions.

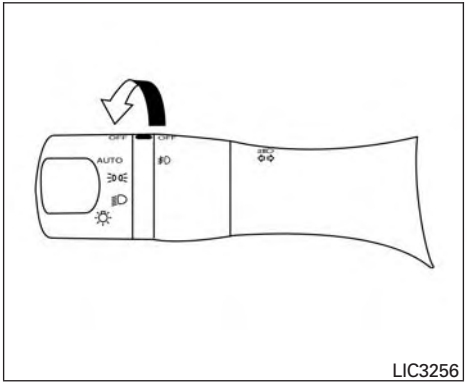

LIC3256

FOG LIGHT SWITCH (if so equipped)

To turn the fog lights on, rotate the headlight switch to the position, then rotate the fog light switch to the position.

To turn the fog lights on with the headlight switch in the AUTO position, the headlights must be on, then rotate the fog light switch to the position.

To turn the fog lights off, rotate the fog light switch to the OFF position.

The headlights must be on and the low beams selected for the fog lights to operate. The fog lights automatically turn off when the high beam headlights are selected.

HORN

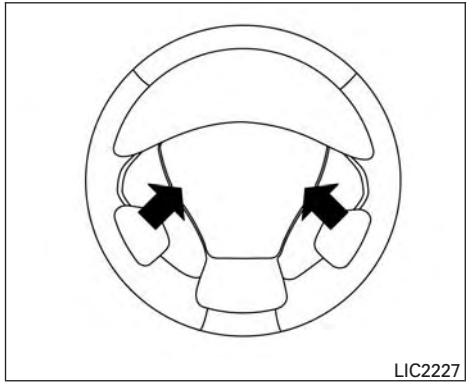
LIC2227

To sound the horn, push the center pad area of the steering wheel.

CLIMATE CONTROLLED SEAT SWITCHES (if so equipped)

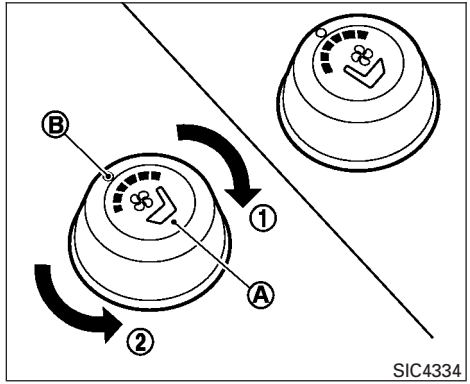

SIC4334

WARNING

Do not use or allow occupants to use the climate controlled seats if you or the occupants can not monitor seat temperatures or have an inability to feel pain in those body parts in contact with the seat. Use of the climate controlled seats by such people could result in serious injury.

CAUTION

- **The battery could run down if the climate control seat is operated while the engine is not running.**

- **Do not use the climate control seat for extended periods or when no one is using the seat.**
- **Do not put anything on the seat which insulates heat, such as a blanket, cushion, seat cover, etc. Otherwise, the seat may become overheated.**
- **Do not place anything hard or heavy on the seat or pierce it with a pin or similar objects. This may result in damage to the climate controlled seat.**
- **Any liquid spilled on the seat should be removed immediately with a dry cloth**
- **The climate controlled seat has an air filter. Do not operate the climate controlled seat without an air filter. This may result in damage to the system.**
- **When cleaning the seat, never use gasoline, benzine, thinner, or any similar materials.**
- **If any malfunctions are found or the climate controlled seat does not operate, turn the switch off and have the system checked. It is recommended that you visit a NISSAN dealer for this service.**

The climate controlled seat warms up or cools down the front seat by blowing warm or cool air from under the surface of the seat. The climate control switch is located on the center console.

The climate controlled seat can be operated as follows:

1. Start the engine.
2. Turn the control knob Ⓐ to the heat side ① or the cool side ②. The indicator light Ⓑ on the control knob will illuminate.
3. Adjust the desired amount of air using the control knob. The climate controlled seat blower remains on low speed for approximately 60 seconds after turning the switch on or selecting the desired temperature.
4. When the vehicle's interior is warmed or cooled, or before you leave the vehicle, be sure to turn the control knob to the OFF (center) position. The indicator light Ⓑ on the control knob goes off with the switch in the OFF (center) position.

To check the air filter for the climate controlled seat, it is recommended that you contact a NISSAN dealer.

HEATED SEAT SWITCHES (if so equipped)

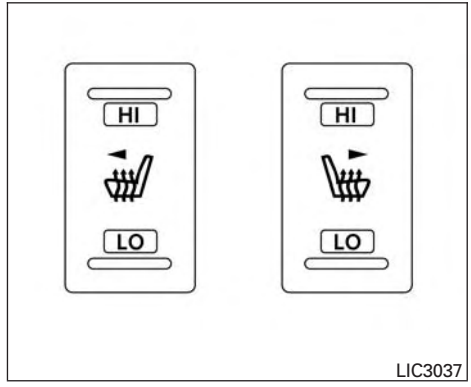

⚠WARNING

Do not use or allow occupants to use the seat heater if you or the occupants cannot monitor elevated seat temperatures or have an inability to feel pain in body parts that contact the seat. Use of the seat heater by such people could result in serious injury.

HEATED 2ND ROW SEAT SWITCHES (if so equipped)

⚠ CAUTION

- **The battery could run down if the seat heater is operated while the engine is not running.**
- **Do not use the seat heater for extended periods or when no one is using the seat.**
- **Do not put anything on the seat which insulates heat, such as a blanket, cushion, seat cover, etc. Otherwise, the seat may become overheated.**
- **Do not place anything hard or heavy on the seat or pierce it with a pin or similar object. This may result in damage to the heater.**
- **Any liquid spilled on the heated seat should be removed immediately with a dry cloth.**
- **When cleaning the seat, never use gasoline, benzine, thinner, or any similar materials.**
- **If any malfunctions are found or the heated seat does not operate, turn the switch off and have the system checked. It is recommended that you visit a NISSAN dealer for this service.**

The front seats are warmed by built-in heaters.

1. Start the engine.
2. Push the LO or HI position of the switch, as desired. The indicator light in the switch will illuminate.

   The heater is controlled by a thermostat, automatically turning the heater on and off. The indicator light will remain on as long as the switch is on.
3. When the seat is warmed or before you leave the vehicle, be sure to push the switch to turn it off.

⚠ WARNING

Do not use or allow occupants to use the seat heater if you or the occupants cannot monitor elevated seat temperatures or have an inability to feel pain in body parts that contact the seat. Use of the seat heater by such people could result in serious injury.

⚠ CAUTION

- **The battery could run down if the seat heater is operated while the engine is not running.**
- **Do not use the seat heater for extended periods or when no one is using the seat.**
- **Do not put anything on the seat which insulates heat, such as a blanket, cushion, seat cover, etc. Otherwise, the seat may become overheated.**
- **Do not place anything hard or heavy on the seat or pierce it with a pin or similar object. This may result in damage to the heater.**
- **Any liquid spilled on the heated seat should be removed immediately with a dry cloth.**

- **When cleaning the seat, never use gasoline, benzine, thinner, or any similar materials.**
- **If any malfunctions are found or the heated seat does not operate, turn the switch off and have the system checked. It is recommended that you visit a NISSAN dealer for this service.**

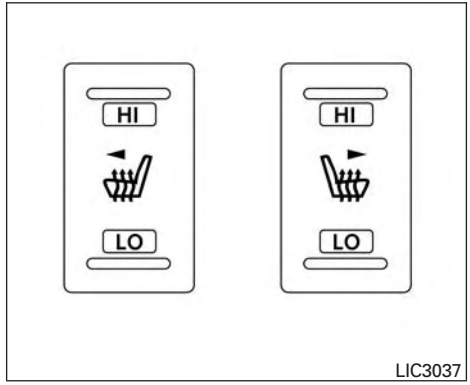

The 2nd row seats are warmed by built-in heaters. The switches are located on the rear of the front center console and can be operated independently of each other.

1. Start the engine.
2. Push the LO or HI position of the switch, as desired. The indicator light in the switch will illuminate.

   The heater is controlled by a thermostat, automatically turning the heater on and off. The indicator light will remain on as long as the switch is on.
3. When the seat is warmed or before you leave the vehicle, be sure to turn the switch off.

HEATED STEERING WHEEL SWITCH (if so equipped)

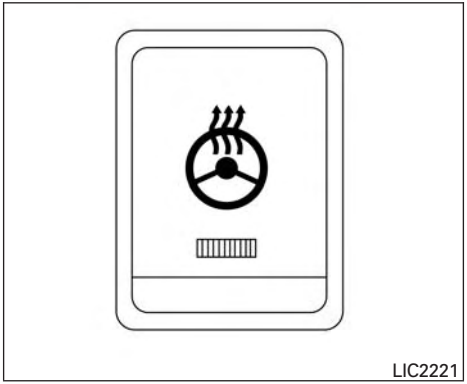

The heated steering wheel system is designed to operate only when the surface temperature of the steering wheel is below 68°F (20°C).

Push the heated steering wheel switch to warm the steering wheel after the engine starts. The indicator light will come on.

If the surface temperature of the steering wheel is below 68°F (20°C), the system will heat the steering wheel and cycle off and on to maintain a temperature above 68°F (20°C). The indicator light will remain on as long as the system is on.

Push the switch again to turn the heated steering wheel system off manually. The indicator light will go off.

NOTE:

If the surface temperature of the steering wheel is above 68°F (20°C) when the switch is turned on, the system will not heat the steering wheel. This is not a malfunction.

VEHICLE DYNAMIC CONTROL (VDC) OFF SWITCH

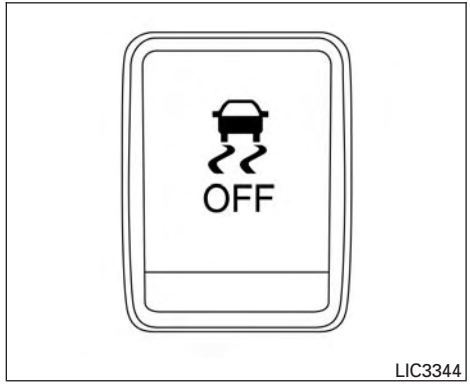

The vehicle should be driven with the VDC system on for most driving conditions.

If the vehicle is stuck in mud or snow, the VDC system reduces the engine output to reduce wheel spin. The engine speed will be reduced even if the accelerator is depressed to the floor. If maximum engine power is needed to free a stuck vehicle, turn the VDC system off.

To turn off the VDC system, push the VDC OFF switch. The OFF indicator will come on.
Push the VDC OFF switch again or restart the engine to turn on the system. For additional information, refer to “Vehicle Dynamic Control (VDC) system” in the “Starting and driving” section of this manual.

HILL DESCENT CONTROL (HDC) SWITCH (if so equipped)

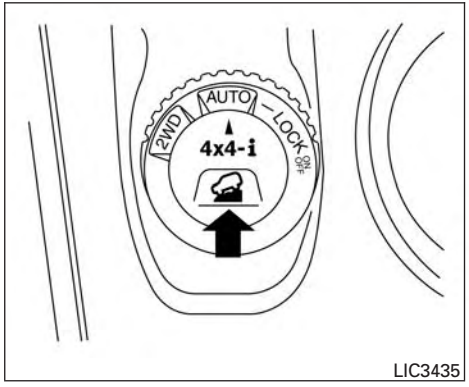

LIC3435

WARNING

- **Never rely solely on the hill descent control system to control vehicle speed when driving on steep downhill grades. Always drive carefully when using the hill descent control system and decelerate the vehicle speed by depressing the brake pedal if necessary. Be especially careful when driving on frozen, muddy or extremely steep downhill roads. Failure to control vehicle speed may result in a loss of control of the vehicle and possible serious injury or death.**
- **The hill descent control may not control the vehicle speed on a hill under all load or road conditions. Always be prepared to depress the brake pedal to control vehicle speed. Failure to do so may result in a collision or serious personal injury.**

CAUTION

When the hill descent control system operates continuously for a long time, the temperature of the brake pads may increase and the hill descent control system may be temporarily disabled (the indicator light will blink). If the indicator light does not come on continuously after blinking, stop using the system.

The HDC system is designed to reduce driver workload when going down steep hills. The HDC system helps to control vehicle speed so the driver can concentrate on steering the vehicle.

To activate the HDC system:

- the 4WD switch must be in the LOCK position and the vehicle speed must be under 15 mph (25 km/h)
- the hill descent control system switch must be ON.

The HDC system ON indicator light will come on when the system is activated. Also, the stop/tail lights illuminate while the hill descent control system applies the brakes to control vehicle speed.

If the accelerator or brake pedal is depressed while the HDC system is on, the system will stop operating temporarily. As soon as the accelerator or brake pedal is released, the HDC system begins to function again if the HDC operating conditions are fulfilled.

The HDC system ON indicator light blinks if the switch is on and all conditions for system activation are not met or if the system becomes disengaged for any reason.

To turn off the HDC system, push the switch to the OFF position.

For additional information, refer to “Hill descent control system ON indicator light” in this section and “Hill descent control system” in the “Starting and driving” section of this manual.

WARNING SYSTEMS SWITCH (if so equipped)

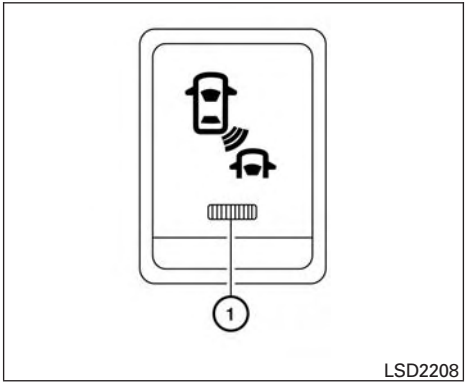

LSD2208

The warning systems switch is used to turn on and off the Blind Spot Warning (BSW) system that is activated using the settings menu on the vehicle information display.

When the warning systems switch is turned off, the indicator ① on the switch is off. The indicator will also be off if the warning system is deactivated using the settings menu.

The BSW system will turn on the side indicator light, located next to the outside mirrors, if the radar detects a vehicle in the detection zone. If the turn signal is activated in the direction of the detected vehicle, a chime sounds twice and the side indicator light will flash. For additional information, refer to “Blind Spot Warning (BSW)” in the “Starting and driving” section of this manual.

TOW MODE SWITCH

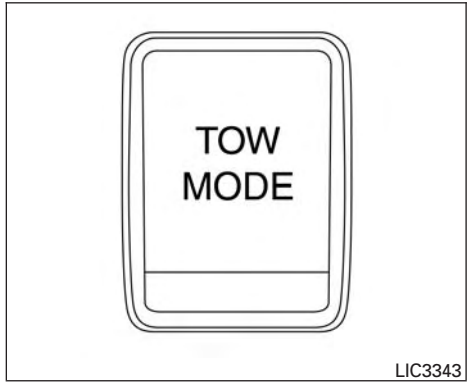

LIC3343

Tow mode should be used when pulling a heavy trailer or hauling a heavy load. Driving the vehicle in the tow mode with no trailer/load or light trailer/light load will not cause any damage. However, fuel economy may be reduced, and the transmission/engine driving characteristics may feel unusual.

Push the tow mode switch to activate tow mode. The indicator light on the instrument panel illuminates when tow mode is selected. Push the tow mode switch again to turn tow mode OFF.

Tow mode is automatically canceled when the ignition switch is placed in the OFF position.

E-CALL (SOS) SWITCH (if so equipped)

LIC3357

The E-call (SOS) system switch is used in combination with a NissanConnect[SM] Services subscription to call for assistance in case of an emergency.

Pushing the switch will (with a paid subscription) reach a response specialist that will provide assistance based on the situation described by the vehicle's occupant. For additional information, or to enroll your vehicle, refer to www.NissanUSA.com/connect or call 855–426–6628.

POWER INVERTER SWITCH (if so equipped)

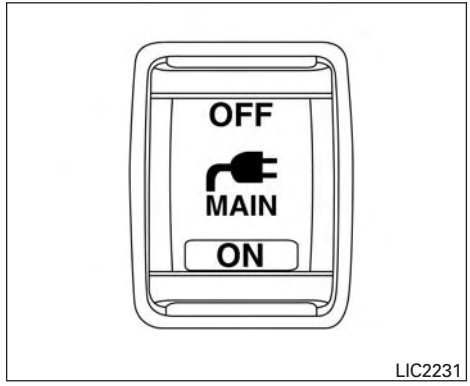

LIC2231

To use the outlets for devices that require 120v power, place the ignition in the ON position and push the power inverter switch.

The switch will illuminate when enabled.

⚠ CAUTION

- **Use power outlets with the engine running to avoid discharging the vehicle battery.**
- **Do not attempt to use this while driving.**
- **Do not use double adapters or more than one electrical accessory, doing so could significantly drain the battery of your vehicle.**

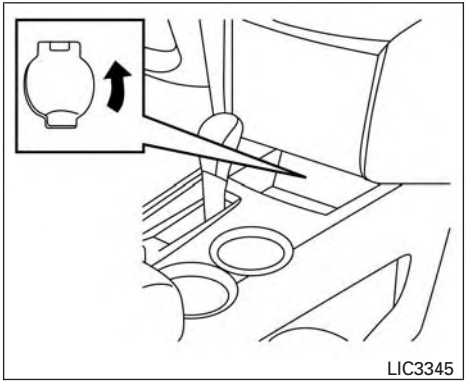

Instrument Panel

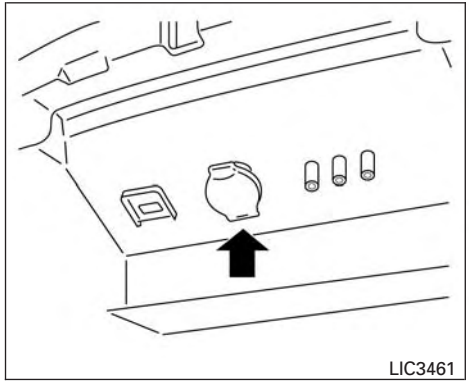

Center Console (if so equipped)

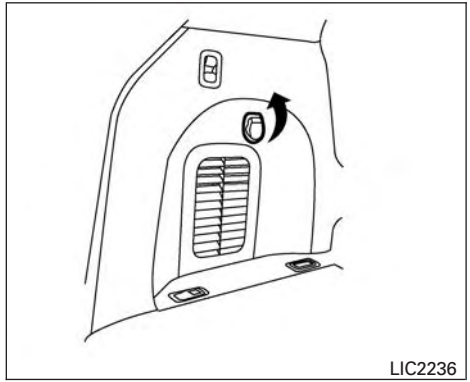

Cargo Area

12V OUTLETS

The power outlets are for powering electrical accessories such as cellular telephones. They are rated at 12 volt, 120W (10A) maximum.

The instrument panel and center console (if so equipped) power outlets are powered only when the ignition switch is in the ACC or ON position.

⚠ CAUTION

- **The outlet and plug may be hot during or immediately after use.**
- **Only certain power outlets are designed for use with a cigarette lighter unit. Do not use any other power outlet for an accessory lighter. It is recommended that you visit a NISSAN dealer for additional information.**
- **Do not use with accessories that exceed a 12 volt, 120W (10A) power draw.**
- **Do not use double adapters or more than one electrical accessory.**
- **Use power outlets with the engine running to avoid discharging the vehicle battery.**
- **Avoid using power outlets when the air conditioner, headlights, or rear window defroster is on.**
- **Before inserting or disconnecting a plug, be sure the electrical accessory being used is turned off.**

- **Push the plug in as far as it will go. If good contact is not made, the plug may overheat or the internal temperature fuse may open.**
- **When not in use, be sure to close the cap. Do not allow water or any other liquid to contact the outlet.**

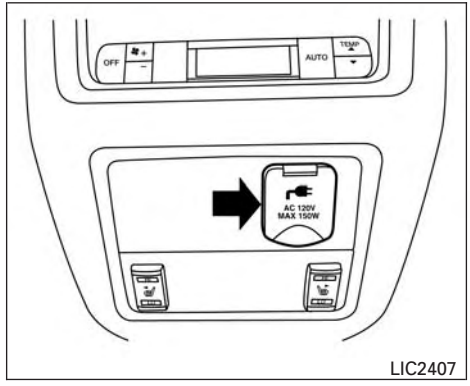

2nd Row

120V OUTLET (if so equipped)

⚠ CAUTION

- **The outlet and plug may be hot during or immediately after use.**
- **Use power outlets with the engine running to avoid discharging the vehicle battery.**
- **Do not use double adaptors or more than one electrical accessory.**
- **Avoid using power outlets when the air conditioner, headlights or rear window defroster is on.**
- **Before inserting or disconnecting a plug, be sure the electrical accessory being used is turned off.**
- **Push the plug in as far as it will go. If good contact is not made, the plug may overheat or the internal temperature fuse may open.**
- **When not in use, be sure to close the cap. Do not allow water or any other liquid to contact the outlet.**

EXTENDED STORAGE SWITCH

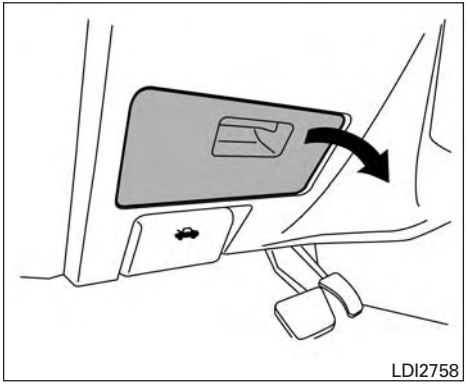

The extended storage switch is used when the vehicle is in transit from the factory. It is located in the fuse panel to the left of the steering wheel on the instrument panel. If any electrical equipment does not operate, ensure the extended storage switch is pushed fully in place, as shown.

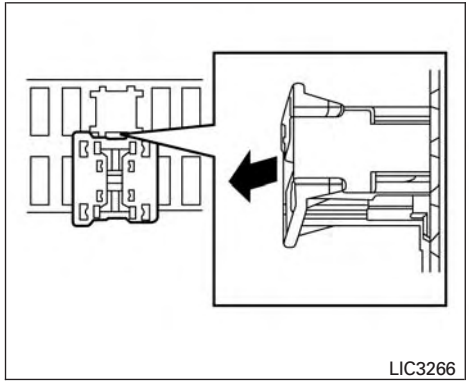

Pulled position

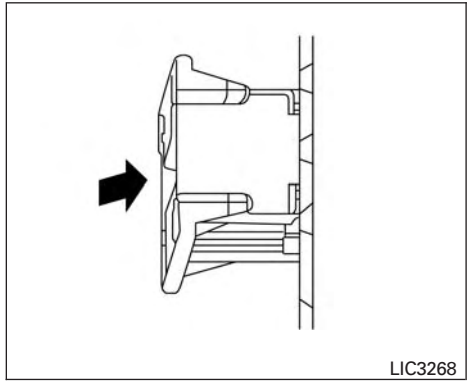

Pushed position

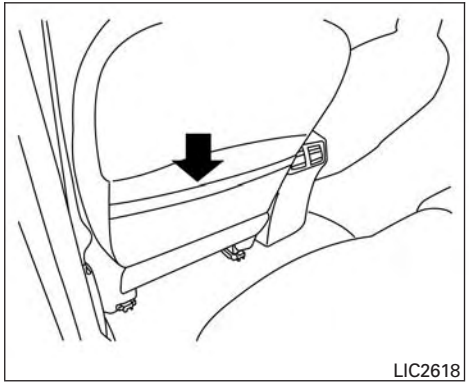

SEATBACK POCKETS

There is one seatback pocket located on the back of the driver and passenger seats. The pockets can be used to store maps.

⚠ WARNING

To ensure proper operation of the passenger's NISSAN Advanced Air Bag System, please observe the following items:

- **Do not allow a passenger in the rear seat to push or pull on the seatback pocket or head restraint/headrest.**
- **Do not place heavy loads heavier than 2.2 lbs. (1 kg) on the seatback, head restraint/headrest or in the seatback pocket.**

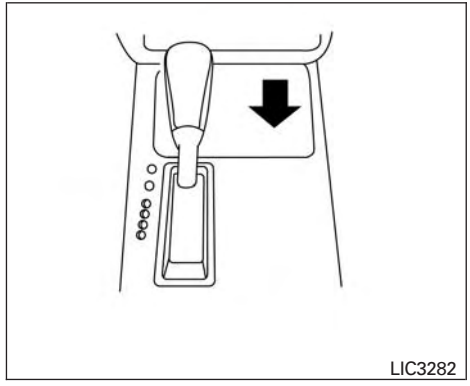

Front console

STORAGE TRAYS

⚠ WARNING

Do not place sharp objects in the trays to help prevent injury in an accident or sudden stop.

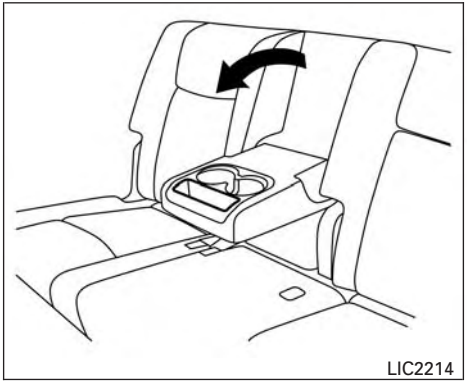

Rear armrest

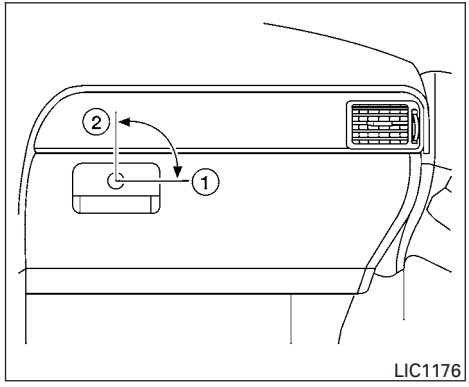

GLOVE BOX

Open the glove box by pulling the handle. Use the master key when locking ① or unlocking ② the glove box.

⚠WARNING

Keep glove box lid closed while driving to help prevent injury in an accident or a sudden stop.

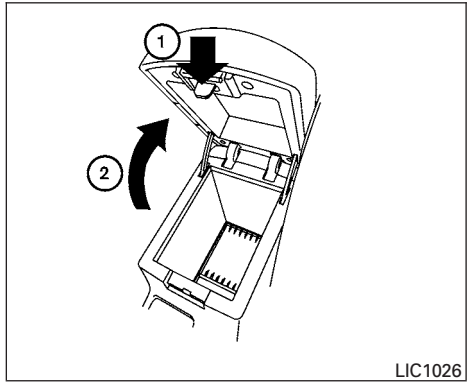

CONSOLE BOX

To open the console box, press in on the lever ① and raise the lid ②.

To close, push the lid down until the lock latches.

Upper half

Pull up on the driver's side latch to open the upper half of the console box.

The upper half of the console box may be used for storage of cellular phones. An access hole is provided at the front of the upper half of the console box for a phone or iPod® cord routing to the power outlet.

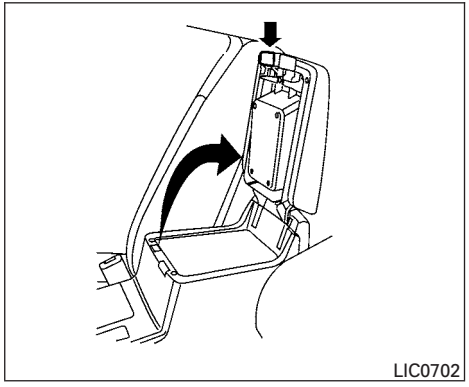

Lower half

Pull up on the passenger's side latch to open the lower half of the console box. A power outlet is located inside the console box and there is storage for compact discs.

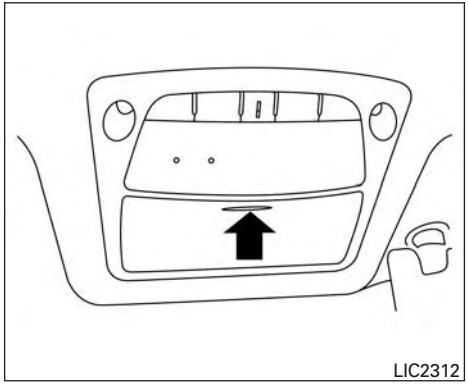

OVERHEAD SUNGLASSES STORAGE

To open the sunglasses holder, push and release.

Only store one pair of sunglasses in the holder.

⚠ WARNING

Keep the sunglasses holder closed while driving to avoid obstructing the driver's view and to help prevent an accident.

⚠ CAUTION

- **Do not use for anything other than sunglasses.**
- **Do not leave sunglasses in the sunglasses holder while parking in direct sunlight. The heat may damage the sunglasses.**

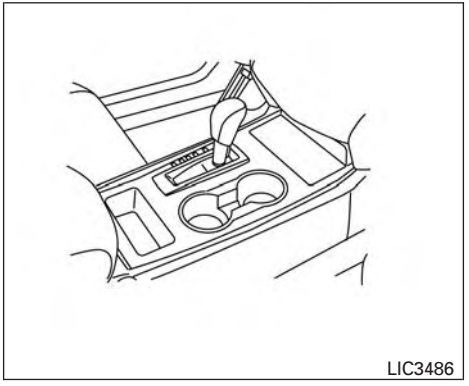

Front console

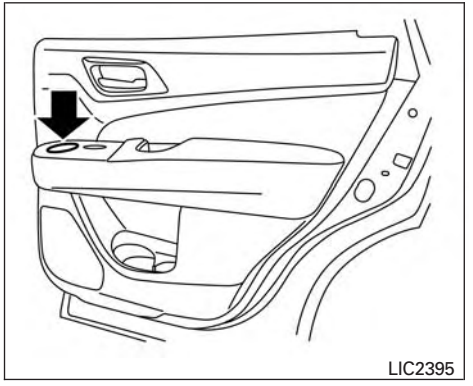

Rear door

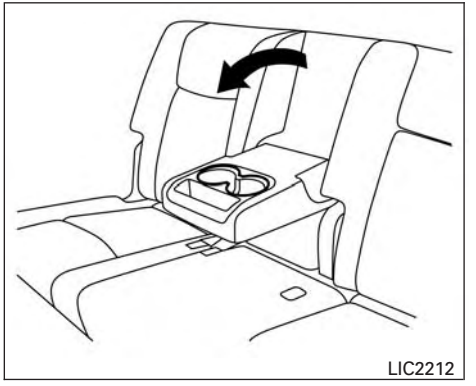

2nd row

CUP HOLDERS

⚠ CAUTION

Do not recline the rear seatback when you use the cup holders on the rear armrest. Doing so may cause the beverages to spill over, and if they are hot, they may scald the passengers.

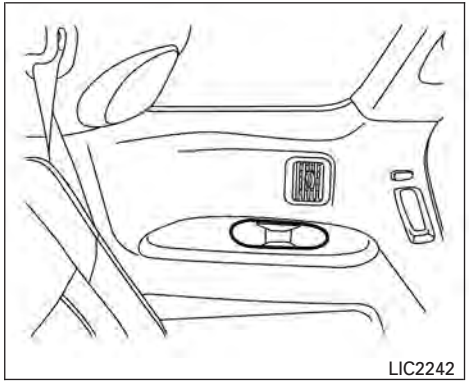

3rd row

CAUTION

- **Avoid abrupt starting and braking when the cup holder is being used to prevent spilling the drink. If the liquid is hot, it can scald you or your passenger.**
- **Use only soft cups in the cup holder. Hard objects can injure you in an accident.**

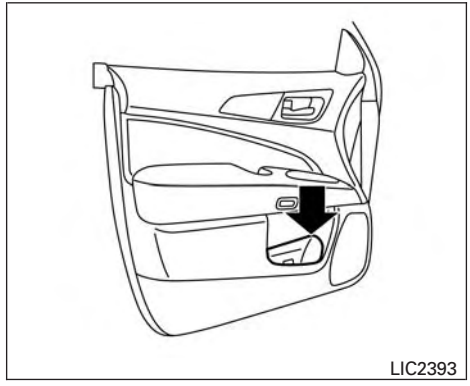

Bottle holder — front

CAUTION

- **Do not use bottle holder for any other objects that could be thrown about in the vehicle and possibly injure people during sudden braking or an accident.**
- **Do not use bottle holder for open liquid containers.**

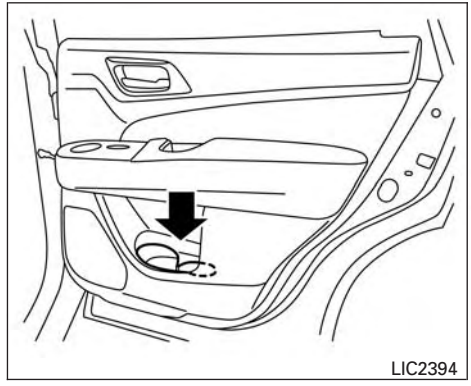

Bottle holder — rear

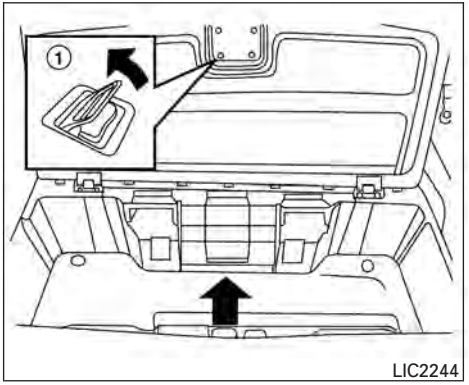

CARGO AREA STORAGE BIN

To access the floor storage area, push down ① to raise the handle, then pull up on the handle to lift the luggage board.

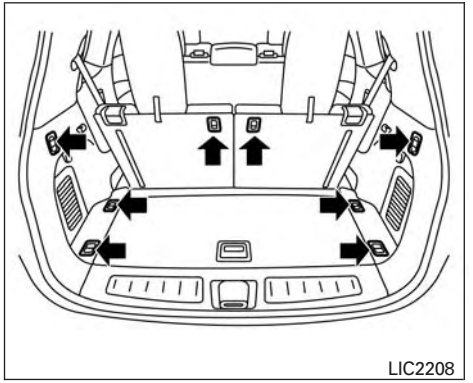

Type A (if so equipped)

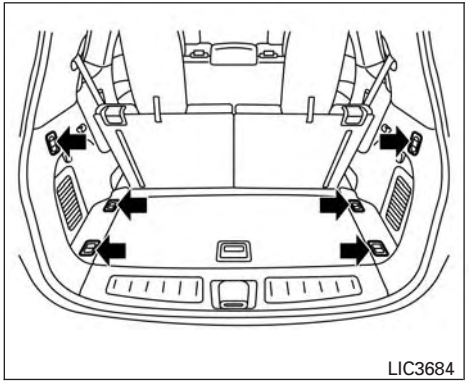

Type B (if so equipped)

LUGGAGE HOOKS

When securing items using luggage hooks located on the back of the seat or side finisher do not apply a load over more than 6.5 lbs (29 N) to a single hook.

The luggage hooks that are located on the floor should have loads less than 110 lbs (490 N) to a single hook.

The luggage hooks can be used to secure cargo with ropes or other types of straps.

⚠ WARNING

- **Properly secure all cargo with ropes or straps to help prevent it from sliding or shifting. Do not place cargo higher than the seatbacks. In a sudden stop or collision, unsecured cargo could cause personal injury.**
- **Use suitable ropes and hooks to secure cargo.**

- **Never allow anyone to ride in the luggage area. It is extremely dangerous to ride in a cargo area inside of a vehicle. In a collision, people riding in these areas are more likely to be seriously injured or killed.**
- **Do not allow people to ride in any area of your vehicle that is not equipped with seats and seat belts.**
- **The child restraint top tether strap may be damaged by contact with items in the cargo area. Secure any items in the cargo area. Your child could be seriously injured or killed in a collision if the top tether strap is damaged.**
- **Be sure everyone in your vehicle is in a seat and using a seat belt properly.**

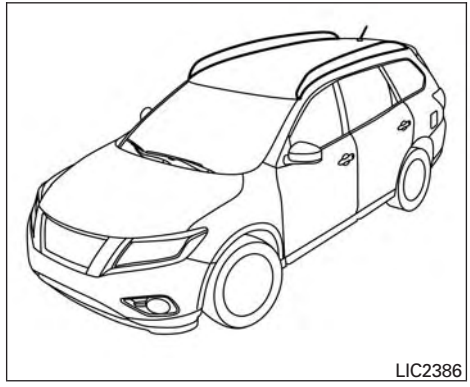

ROOF RACK (if so equipped)

Genuine NISSAN accessory cross bars are available through a NISSAN dealer.

Always distribute the luggage evenly on the cross bars. Do not load more than 150 lb (68 kg) on the cross bars. Observe the maximum load limit shown on the cross bars or roof carriers when you attach them on the roof cross bars. It is recommended that you visit a NISSAN dealer for crossbar or other equipment information.

Do not apply any load directly to the roof side rails. Cross bars must be installed before applying load/cargo/luggage to the roof of the vehicle.

Be careful that your vehicle does not exceed the Gross Vehicle Weight Rating (GVWR) or its Gross Axle Weight Rating (GAWR front and rear). The GVWR and GAWR are located on the F.M.V.S.S. or C.V.M.S.S. certification label (located on the driver's door pillar). For additional information regarding GVWR and GAWR, refer to "Vehicle loading information" in the "Technical and consumer information" section of this manual.

⚠ WARNING

- **Drive extra carefully when the vehicle is loaded at or near the cargo carrying capacity, especially if the significant portion of that load is carried on the cross bars.**
- **Heavy loading of the cross bars has the potential to affect the vehicle stability and handling during sudden or unusual handling maneuvers.**
- **Roof rack cross bars should be evenly distributed.**
- **Do not exceed maximum roof rack cross bars load.**

- **Properly secure all cargo with ropes or straps to help prevent it from sliding or shifting. In a sudden stop or collision, unsecured cargo could cause personal injury.**

CAUTION

Always install the cross bars onto the roof side rails before loading cargo of any kind. Loading cargo directly onto the roof side rails or the vehicle's roof may cause vehicle damage.

POWER WINDOWS

WARNING

- **Make sure that all passengers have their hands, etc. inside the vehicle while it is in motion and before closing the windows. Use the window lock switch to prevent unexpected use of the power windows.**
- **To help avoid risk of injury or death through unintended operation of the vehicle and/or its systems, including entrapment in windows or inadvertent door lock activation, do not leave children, people who require the assistance of others or pets unattended in your vehicle. Additionally, the temperature inside a closed vehicle on a warm day can quickly become high enough to cause a significant risk of injury or death to people and pets.**

The power windows operate when the ignition switch is placed in the ON position, or for a period of time after the ignition switch is placed in the OFF position. If the driver's or passenger's door is opened during this period of time, the power to the windows is canceled.

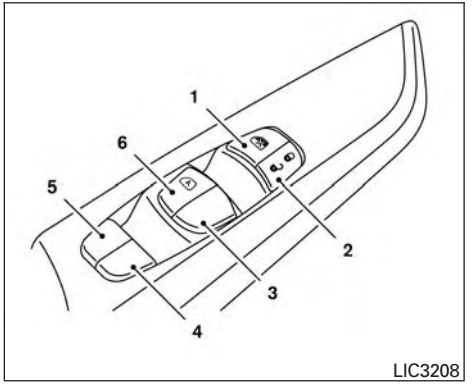

1. Window lock button
2. Power door lock switch
3. Front passenger side switch
4. Right rear passenger side switch
5. Left rear passenger side switch
6. Driver's side automatic switch

Driver's side power window switch

The driver's side control panel is equipped with switches to open or close all of the windows.

To open a window, push the switch to the detent and continue to hold down until the desired window position is reached. To close a window, pull the switch to the detent and continue to hold up until the desired window position is reached.

Locking passengers' windows

When the window lock switch is depressed, only the driver's side window can be opened or closed. Push it again to cancel the window lock function.

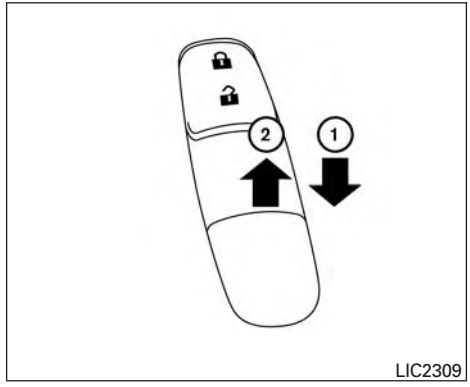

Front passenger's power window switch

The passenger's window switch operates only the corresponding passenger's window. To open the window partially, push the switch down ① lightly until the desired window position is reached. To close the window partially, pull the switch up ② until the desired window position is reached.

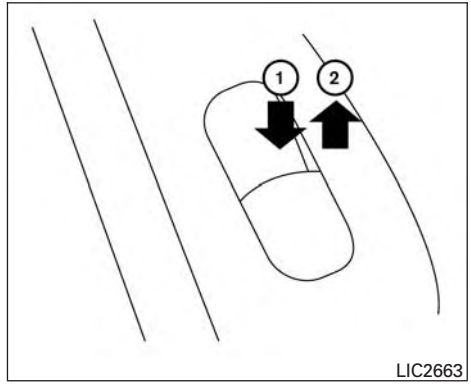

Rear power window switch

The rear power window switches open or close only the corresponding windows. To open the window, push the switch and hold it down ①. To close the window, pull the switch up ②.

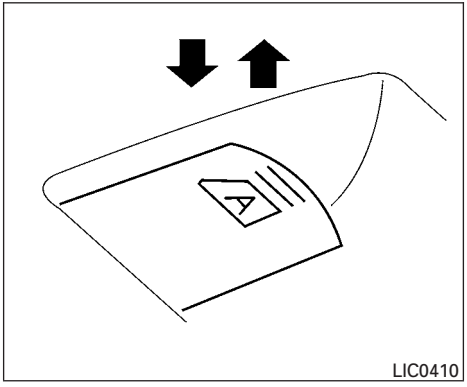

Automatic operation (if so equipped)

To fully open a window equipped with automatic operation, press the window switch down to the second detent and release it; it need not be held. The window automatically opens all the way. To stop the window, lift the switch up while the window is opening.

Auto-reverse function

The auto-reverse function can be activated when a window is closed by automatic operation.

Depending on the environment or driving conditions, the auto-reverse function may be activated if an impact or load similar to something being caught in the window occurs.

⚠ WARNING

There are some small distances immediately before the closed position which cannot be detected. Make sure that all passengers have their hands, etc., inside the vehicle before closing the window.

If the vehicle's battery is disconnected, replaced, or jump started, the power window auto-reverse function may not operate properly. If this occurs, please contact the dealer to re-initialize the power window auto-reverse system.

If the control unit detects something caught in a window equipped with automatic operation, as it is closing, the window will be immediately lowered.

When power window switch does not operate

If the power window automatic function (closing only) does not operate properly, perform the following procedure to initialize the power window system:

1. Place the ignition switch in the ON position.
2. Open the window more than halfway by operating the power window switch.
3. Pull the power window switch and hold it to close the window, and then hold the switch more than 3 seconds after the window is closed.
4. Release the power window switch. Operate the window by the automatic function to confirm the initialization is complete. The power window automatically opens or closes depending on if the automatic down or up function is selected.
5. Perform steps 2 through 4 above for other windows.

If the power window function does not operate properly after performing the above procedure have the system checked and repaired. It is recommended that you visit a NISSAN dealer for this service.

DUAL PANEL MOONROOF (if so equipped)

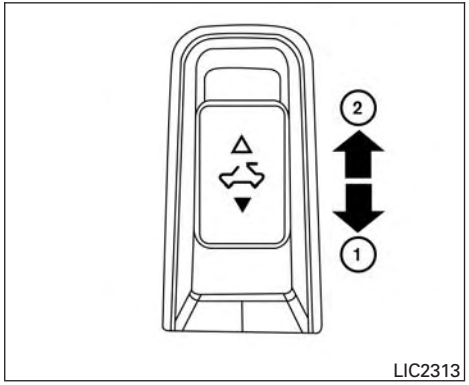

POWER MOONROOF

The moonroof will only operate when the ignition switch is in the ON position. The power moonroof is operational for a period of time, even if the ignition switch is placed in the ACC or OFF position. If the driver's door or the front passenger's door is opened during this period of time, the power to the moonroof is canceled.

Sliding the moonroof

To fully open or close the moonroof, push the switch to the open ① or close ② position and release it; it need not be held. The roof will automatically open or close all the way. To stop the roof, push the switch once more while it is opening or closing.

Tilting the moonroof

To tilt up, first close the moonroof, then push the switch to the tilt up position ① and release it; it need not be held. To tilt down the moonroof, push the switch to the tilt down position ②.

Resetting the moonroof switch

If the moonroof does not operate properly, perform the following procedure to initialize the moonroof operation system.

1. Place the ignition switch in the ON position.
2. Press and hold the moonroof tilt switch forward until the moonroof stops.
3. Release the moonroof switch.
4. Press and hold the tilt up switch within 6 seconds.
5. The roof glass will tilt-down, slide-close, slide-open, slide-close, tilt-up, tilt-down.
6. Release the switch; initialization is complete if the moonroof operates normally.

If the moonroof does not operate properly after performing the procedure above, have your vehicle checked. It is recommended that you visit a NISSAN dealer for this service.

Auto-reverse function (when closing or tilting down the moonroof)

The auto-reverse function can be activated when the moonroof is closed or tilted down by automatic operation when the ignition switch is placed in the ON position or for a period of time after the ignition switch is placed in the OFF position. **Depending on the environment or driving conditions, the auto-reverse function may be activated if an impact or load similar to something being caught in the moonroof occurs.**

⚠ WARNING

There are some small distances immediately before the closed position which cannot be detected. Make sure that all passengers have their hands, etc., inside the vehicle before closing the moonroof.

When closing

If the control unit detects something caught in the moonroof as it moves to the front, the moonroof will immediately open backward.

** Click HERE to see "Owner's Manual Supplement" **

When tilting down

If the control unit detects something caught in the moonroof as it tilts down, the moonroof will immediately tilt up.

If the auto-reverse function malfunctions and repeats opening or tilting up the moonroof, keep pushing the tilt down switch within 5 seconds after it happens; the moonroof will fully close gradually. Make sure nothing is caught in the moonroof.

WARNING

- **In an accident you could be thrown from the vehicle through an open moonroof. Always use seat belts and child restraints.**
- **Do not allow anyone to stand up or extend any portion of their body out of the moonroof opening while the vehicle is in motion or while the moonroof is closing.**

CAUTION

- **Remove water drops, snow, ice or sand from the moonroof before opening.**
- **Do not place heavy objects on the moonroof or surrounding area.**

Sunshade

Open and close the sunshade by sliding it forward or backward.

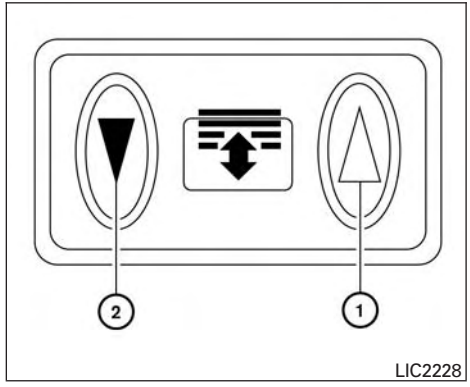

Power sunshade

To open the sunshade, push the switch ① toward the open position.

To close the sunshade, push the switch ② toward the close position.

If the moonroof does not close

Have your moonroof checked and repaired. It is recommended that you visit a NISSAN dealer for this service.

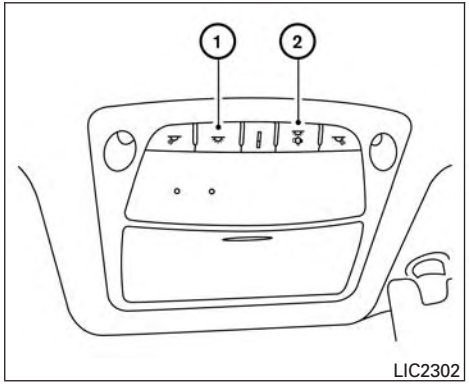

LIC2302

When the ON switch ① is pressed, the footwell lights (if so equipped), step lights (if so equipped), map lights and rear personal lights will automatically turn on and stay on for a period of time when:

- The doors are unlocked by the Intelligent Key, a key or the request switch (if so equipped) while all doors are closed and the ignition switch is in the OFF position.
- When individually pushed.

When the OFF switch ② is pushed, the interior lights do not illuminate.

NOTE:

The footwell lights and step lights illuminate when the driver and passenger doors are open regardless of the interior light switch position. These lights will turn off automatically after a period of time while doors are open to prevent the battery from becoming discharged.

⚠ CAUTION

Do not use for extended periods of time with the engine stopped. This could result in a discharged battery.

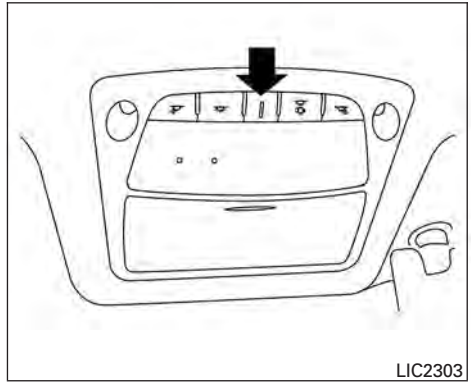
LIC2303

CONSOLE LIGHT

The console light will turn on whenever the parking lights or headlights are illuminated.

The console light brightness can be adjusted with the illumination brightness control.

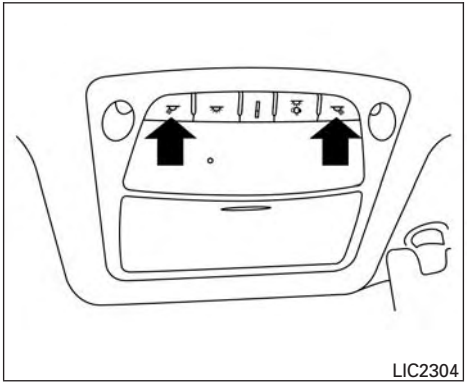

MAP LIGHTS

Press the button to turn the map lights on. To turn them off, press the button again.

⚠ CAUTION

Do not use for extended periods of time with the engine stopped. This could result in a discharged battery.

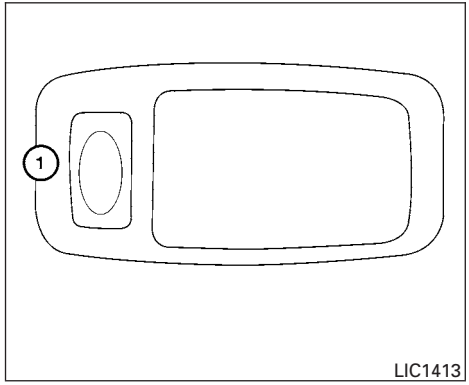

PERSONAL LIGHTS

To turn on the personal lights, push and release the switch ①.

To turn off the personal lights, push and release the switch ①.

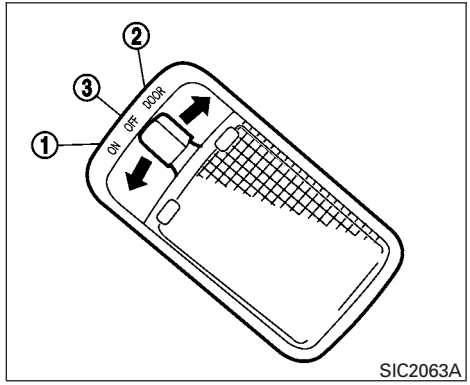

CARGO LIGHT

The cargo light on the overhead trim has a three-position switch. To operate, push the switch to the desired position.

① ON: The light is illuminated.

② DOOR: The light illuminates when the liftgate is opened. The light turns off when the liftgate is closed.

③ OFF: The light does not illuminate regardless of liftgate position or lock status.

CAUTION

Do not use for extended periods of time with the engine stopped. This could result in a discharged battery.

HOMELINK® UNIVERSAL TRANSCEIVER (if so equipped)

The HomeLink® Universal Transceiver provides a convenient way to consolidate the functions of up to three individual hand-held transmitters into one built-in device.

HomeLink® Universal Transceiver:

- Will operate most radio frequency devices such as garage doors, gates, home and office lighting, entry door locks and security systems.
- Is powered by your vehicle's battery. No separate batteries are required. If the vehicle's battery is discharged or is disconnected, HomeLink® will retain all programming.

When the HomeLink® Universal Transceiver is programmed, retain the original transmitter for future programming procedures (Example: new vehicle purchases). Upon sale of the vehicle, the programmed HomeLink® Universal Transceiver buttons should be erased for security purposes. For additional information, refer to "Programming HomeLink®" in this section.

WARNING

- **Do not use the HomeLink® Universal Transceiver with any garage door opener that lacks safety stop and reverse features as required by federal safety standards. (These standards became effective for opener models manufactured after April 1, 1982). A garage door opener which cannot detect an object in the path of a closing garage door and then automatically stop and reverse, does not meet current federal safety standards. Using a garage door opener without these features increases the risk of serious injury or death.**
- **During the programming procedure your garage door or security gate will open and close (if the transmitter is within range). Make sure that people or objects are clear of the garage door, gate, etc. that you are programming.**
- **Your vehicle's engine should be turned off while programming the HomeLink® Universal Transceiver. Do not breathe exhaust gases; they contain colorless and odorless carbon monoxide. Carbon monoxide is dangerous. It can cause unconsciousness or death.**

PROGRAMMING HOMELINK®

If you have any questions or are having difficulty programming your HomeLink® buttons, refer to the HomeLink® web site at: www.homelink.com or call 1-800-355-3515.

NOTE:

Place the ignition switch in the ACC position when programming HomeLink®. It is also recommended that a new battery be placed in the hand-held transmitter of the device being programmed to HomeLink® for quicker programming and accurate transmission of the radio frequency.

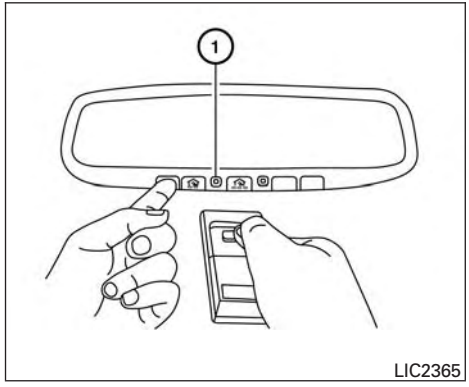

LIC2365

1. Position the end of your hand-held transmitter 1–3 in (2–8 cm) away from the HomeLink® surface, keeping the HomeLink® indicator light ① in view.

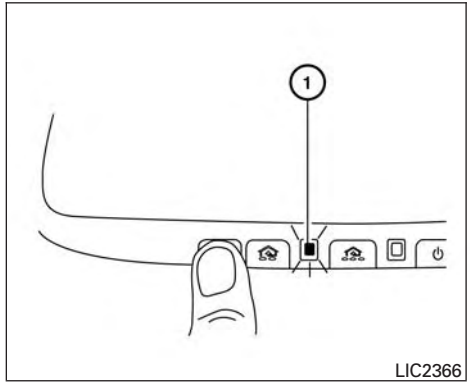

LIC2366

2. Using both hands, simultaneously press and hold the desired HomeLink® button and hand-held transmitter button. DO NOT release until the HomeLink® indicator light ① flashes slowly and then rapidly. When the indicator light flashes rapidly, both buttons may be released. (The rapid flashing indicates successful programming.)

NOTE:

Some devices may require you to replace Step 2 with the cycling procedure noted in "Programming HomeLink® for Canadian customers and gate openers" in this section.

3. Press and hold the programmed HomeLink® button and observe the indicator light.
   - If the indicator light ① **is solid/continuous, programming is complete** and your device should activate when the HomeLink® button is pressed and released.
   - If the indicator light ① blinks **rapidly for 2 seconds and then turns to a solid/continuous light, continue with Steps 4-6** for a rolling code device. A second person may make the following steps easier. Use a ladder or other device. Do not stand on your vehicle to perform the next steps.
4. At the receiver located on the garage door opener motor in the garage, locate the "learn" or "smart" button (the name and color of the button may vary by manufacturer but it is usually located near where the hanging antenna wire is attached to the unit). If there is difficulty locating the button, reference the garage door opener's manual.
5. Press and release the "learn" or "smart" button.
6. Return to the vehicle and firmly press and hold the trained HomeLink® button for 2 seconds and release. Repeat the "press/hold/release" sequence up to three times to complete the training process. HomeLink® should now activate your rolling code equipped device.
7. If you have any questions or are having difficulty programming your HomeLink® buttons, refer to the HomeLink® web site at: www.homelink.com or call 1-800-355-3515.

PROGRAMMING HOMELINK® FOR CANADIAN CUSTOMERS AND GATE OPENERS

Canadian radio-frequency laws require transmitter signals to "time-out" (or quit) after several seconds of transmission – which may not be long enough for HomeLink® to pick up the signal during training. Similar to this Canadian law, some U.S. gate operators are designed to "timeout" in the same manner.

If you live in Canada or you are having difficulties training a gate operator **or** garage door opener by using the "Training" procedures, **replace** "Programming HomeLink®" **Step 2** with the following:

NOTE:

When programming a garage door opener, etc., unplug the device during the "cycling" process to prevent possible damage to the garage door opener components.

1. For additional information, refer to "Programming HomeLink®" step 1 in this section.
2. Using both hands, simultaneously press and hold the desired HomeLink® button and the hand-held transmitter button. During training, your hand-held transmitter may automatically stop transmitting. Continue to press and hold the desired HomeLink® button while you press and re-press ("cycle") your hand-held transmitter every 2 seconds until the frequency signal has been learned. The HomeLink® indicator light will flash slowly and then rapidly after several seconds upon successful training. DO NOT release until the HomeLink® indicator light flashes slowly and then rapidly. When the indicator light flashes rapidly, both buttons may be

released. The rapid flashing indicates successful training.
Proceed with “Programming HomeLink®” step 3 to complete.
If the device was unplugged during the programming procedure, remember to plug it back in when programming is completed.

OPERATING THE HOMELINK® UNIVERSAL TRANSCEIVER

The HomeLink® Universal Transceiver, after it is programmed, can be used to activate the programmed device. To operate, simply press and release the appropriate programmed HomeLink® Universal Transceiver button. The amber indicator light will illuminate while the signal is being transmitted.

For convenience, the hand-held transmitter of the device may also be used at any time.

PROGRAMMING TROUBLE-DIAGNOSIS

If the HomeLink® does not quickly learn the hand-held transmitter information:

- replace the hand-held transmitter batteries with new batteries.
- position the hand-held transmitter with its battery area facing away from the HomeLink® surface.
- press and hold both the HomeLink® and hand-held transmitter buttons without interruption.
- position the hand-held transmitter 1 - 3 in (26 - 76 mm) away from the HomeLink® surface. Hold the transmitter in that position for up to 15 seconds. If HomeLink® is not programmed within that time, try holding the transmitter in another position – keeping the indicator light in view at all times.

If you have any questions or are having difficulty programming your HomeLink® buttons, refer to the HomeLink® web site at: www.homelink.com or call 1-800-355-3515.

CLEARING THE PROGRAMMED INFORMATION

The following procedure clears the programmed information from both buttons. Individual buttons cannot be cleared. However, individual buttons can be reprogrammed. For additional information, refer to “Reprogramming a single HomeLink® button” in this section.

To clear all programming:

1. Press and hold the two outer HomeLink® buttons until the indicator light begins to flash in approximately 10 seconds. Do not hold for longer than 20 seconds.
2. Release both buttons.

HomeLink® is now in the programming mode and can be programmed at any time beginning with “Programming HomeLink®” - Step 1.

REPROGRAMMING A SINGLE HOMELINK® BUTTON

To reprogram a HomeLink® Universal Transceiver button, complete the following:

1. Press and hold the desired HomeLink® button. **DO NOT** release the button.
2. The indicator light will begin to flash after 20 seconds. Without releasing the HomeLink® button, proceed with “Programming HomeLink®” - Step 1.

For questions or comments, contact HomeLink® at: www.homelink.com or 1–800–355–3515 (except Mexico).

The HomeLink® Universal Transceiver button has now been reprogrammed. The new device can be activated by pushing the HomeLink® button that was just programmed. This procedure will not affect any other programmed HomeLink® buttons.

IF YOUR VEHICLE IS STOLEN

If your vehicle is stolen, you should change the codes of any non-rolling code device that has been programmed into HomeLink®. Consult the Owner's Manual of each device or call the manufacturer or dealer of those devices for additional information.

When your vehicle is recovered, you will need to reprogram the HomeLink® Universal Transceiver with your new transmitter information.

FCC Notice:

For USA:

This device complies with Part 15 of the FCC Rules. Operation is subject to the following two conditions: (1) This device may not cause harmful interference, and (2) this device must accept any interference received, including interference that may cause undesired operation.

NOTE:

Changes or modifications not expressly approved by the party responsible for compliance could void the user's authority to operate the equipment.

For Canada:

This device complies with Industry Canada license-exempt RSS standard(s). Operation is subject to the following two conditions: (1) this device may not cause interference, and (2) this device must accept any received, including interference that may cause undesired operation of the device.

3 Pre-driving checks and adjustments

Keys 3-2
NISSAN Intelligent Key® 3-2
NISSAN Vehicle Immobilizer System keys 3-4
Doors 3-5
Locking with key. 3-5
Locking with inside lock knob 3-6
Locking with power door lock switch 3-6
Automatic door locks 3-6
Child safety rear door lock. 3-7
NISSAN Intelligent Key® 3-7
Operating range. 3-9
Door locks/unlocks precaution 3-9
NISSAN Intelligent Key® Operation 3-10
How to use the remote keyless entry function 3-13
Warning signals 3-16
Troubleshooting guide 3-16
Remote Engine Start (if so equipped) 3-18
Remote engine start operating range 3-18
Remote starting the vehicle 3-18
Extending engine run time 3-19
Canceling a remote start 3-19
Conditions the remote start will not work 3-19
Hood 3-20
Liftgate 3-21
Operating the manual liftgate (if so equipped) 3-21
Operating the power liftgate (if so equipped) 3-21
Motion-Activated Liftgate (if so equipped) 3-24
Power liftgate main switch 3-26
Liftgate release. 3-27
Liftgate position setting 3-28
Fuel-filler door 3-28
Opening the fuel-filler door 3-28
Fuel-filler cap 3-29
Steering wheel 3-31
Manual operation (if so equipped) 3-31
Automatic operation (if so equipped). 3-31
Sun visors 3-32
Vanity mirrors 3-33
Mirrors 3-33
Manual anti-glare rearview mirror (if so equipped) 3-33
Automatic anti-glare rearview mirror (if so equipped) 3-34
Outside mirrors 3-35
Automatic drive positioner (if so equipped) 3-36

Memory storage function 3-37
Entry/exit function 3-38
Setting memory function. 3-38
System operation. 3-39

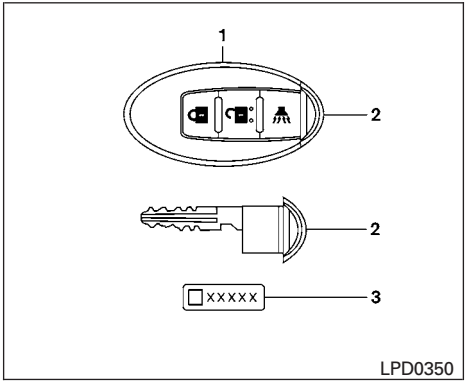

Type A (if so equipped)

1. Two Intelligent Keys
2. Mechanical key
3. Key number plate

NISSAN INTELLIGENT KEY®

Your vehicle can only be driven with the Intelligent Keys which are registered to your vehicle's Intelligent Key system components and NISSAN Vehicle Immobilizer System components.

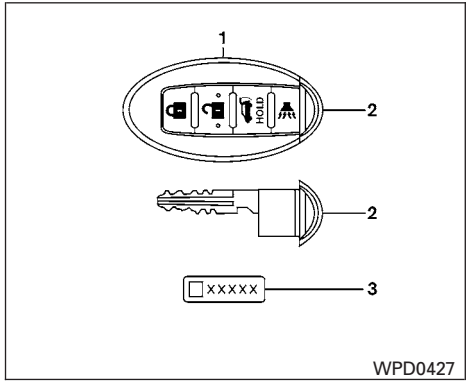

Type B (if so equipted)

Never leave these keys in the vehicle.

As many as four Intelligent Keys can be registered and used with one vehicle. The new keys must be registered by a NISSAN dealer prior to use with the Intelligent Key system and NISSAN Vehicle Immobilizer System of your vehicle. Since the registration process requires erasing all memory in the Intelligent Key components when registering new keys, be sure to take all Intelligent Keys that you have to the NISSAN dealer.

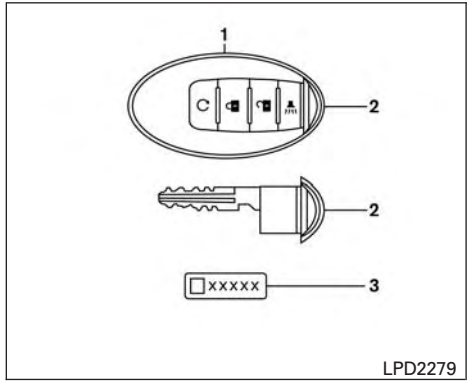

Type C (if so equipted)

A key number plate is supplied with your keys. Record the key number and keep it in a safe place (such as your wallet), not in the vehicle. If you lose your keys, it is recommended that you visit a NISSAN dealer for duplicates by using the key number. NISSAN does not record key numbers so it is very important to keep track of your key number plate.

A key number is only necessary when you have lost all keys and do not have one to duplicate from. If you still have a key, it can be duplicated without knowing the key number.

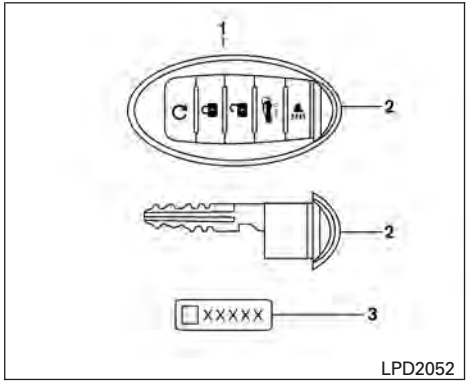

Type D (if so equipped)

⚠ CAUTION

Listed below are conditions or occurrences which will damage the Intelligent Key:

- **Do not allow the Intelligent Key, which contains electrical components, to come into contact with water or salt water. This could affect the system function.**
- **Do not drop the Intelligent Key.**
- **Do not strike the Intelligent Key sharply against another object.**
- **Do not change or modify the Intelligent Key.**
- **Wetting may damage the Intelligent Key. If the Intelligent Key gets wet, immediately wipe until it is completely dry.**
- **Do not place the Intelligent Key for an extended period in an area where temperatures exceed 60°C (140°F).**
- **Do not attach the Intelligent Key with a key holder that contains a magnet.**
- **Do not place the Intelligent Key near equipment that produces a magnetic field, such as a TV, audio equipment and personal computers.**

If an Intelligent Key is lost or stolen, NISSAN recommends erasing the ID code of that Intelligent Key from the vehicle. This may prevent the unauthorized use of the Intelligent Key to operate the vehicle. For information regarding the erasing procedure, it is recommended that you visit a NISSAN dealer.

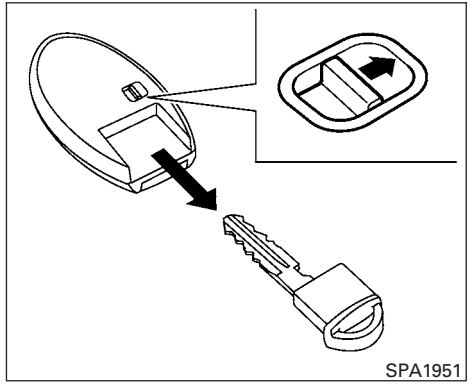

Mechanical key

The Intelligent Key contains the mechanical key.

To remove the mechanical key, release the lock knob on the back of the Intelligent Key.

To install the mechanical key, firmly insert it into the Intelligent Key until the lock knob returns to the lock position.

Use the mechanical key to lock or unlock the driver's door and glove box.

⚠ CAUTION

Always carry the mechanical key installed in the Intelligent Key slot.

For additional information, refer to “Doors” in this section and “Storage” in the “Instruments and controls” section of this manual.

Valet hand-off

When you have to leave a key with a valet, give them the Intelligent Key itself and keep the mechanical key with you to protect your belongings.

To prevent the glove box from being opened during valet hand-off, follow the procedure below.

1. Remove the mechanical key from the Intelligent Key.
2. Lock the glove box with the mechanical key.
3. Hand the Intelligent Key to the valet and keep the mechanical key with you.

For additional information, refer to “Storage” in the “Instruments and controls” section of this manual.

NISSAN VEHICLE IMMOBILIZER SYSTEM KEYS

You can only drive your vehicle using the master or valet keys which are registered to the NISSAN Vehicle Immobilizer System components in your vehicle. These keys have a transponder chip in the key head.

The master key can be used for all the locks.

To protect your belongings when you leave a key with someone, give them the Intelligent Key only, not the mechanical key.

Never leave these keys in the vehicle.

Additional or replacement keys:

If you still have a key, the key number is not necessary when you need extra NISSAN Vehicle Immobilizer System keys. Your existing key can be duplicated without knowing the key number. As many as four NISSAN Vehicle Immobilizer System keys can be used with one vehicle. You should bring all NISSAN Vehicle Immobilizer System keys that you have to the NISSAN dealer for registration. This is because the registration process will erase the memory of all key codes previously registered into the NISSAN Vehicle Immobilizer System. After the registration process, these components will only recognize keys coded into the NISSAN Vehicle Immobilizer System during registration. Any key that is not given to the dealer at the time of registration will no longer be able to start your vehicle.

⚠ CAUTION

Do not allow the immobilizer system key, which contains an electrical transponder, to come into contact with water or salt water. This could affect system function.

When the doors are locked using one of the following methods, the doors cannot be opened using the inside or outside door handles. The doors must be unlocked to open the doors.

⚠WARNING

- **Always have the doors locked while driving. Along with the use of seat belts, this provides greater safety in the event of an accident by helping to prevent persons from being thrown from the vehicle. This also helps keep children and others from unintentionally opening the doors, and will help keep out intruders.**
- **Before opening any door, always look for and avoid oncoming traffic.**
- **To help avoid risk of injury or death through unintended operation of the vehicle and or its systems, including entrapment in windows or inadvertent door lock activation, do not leave children, people who require the assistance of other or pets unattended in your vehicle. Additionally, the temperature inside a closed vehicle on a warm day can quickly become high enough to cause a significant risk of injury or death or people and pets.**

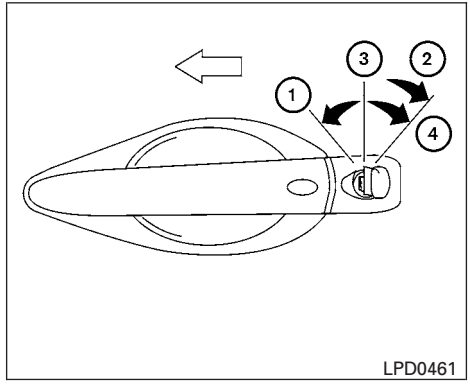

Driver's side

LOCKING WITH KEY

The power door lock system allows you to lock or unlock all doors at the same time.

Turning the key toward the front ① of the vehicle locks all doors.

Turning the key one time toward the rear ② of the vehicle unlocks that door. From that position, returning the key to neutral ③ (where the key can only be removed and inserted) and turning it toward the rear again ④ within 5 seconds unlocks all doors.

Opening and closing windows

The driver's door key operation allows you to open and close windows equipped with automatic operation at the same time.

- To open the windows, turn the driver's door key toward the rear of the vehicle for **longer than 1 second** after the door is unlocked.
- To close the windows, turn the driver's door key toward the front of the vehicle for **longer than 1 second** after the door is locked.

Windows stop when the key cylinder is released.

NOTE:

When the window lock button is pressed the key will not operate the window open or close function.

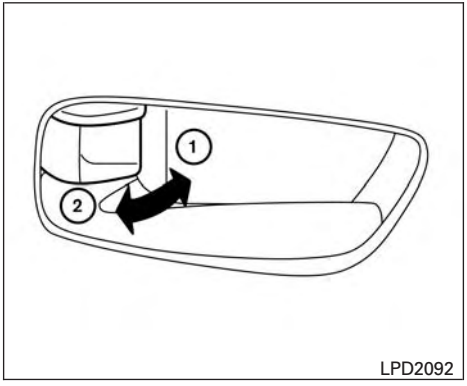

Inside lock

LOCKING WITH INSIDE LOCK KNOB

To lock the door without the key, move the inside lock knob to the lock position ①, then close the door.

To unlock the door without the key, move the inside lock knob to the unlock position ②.

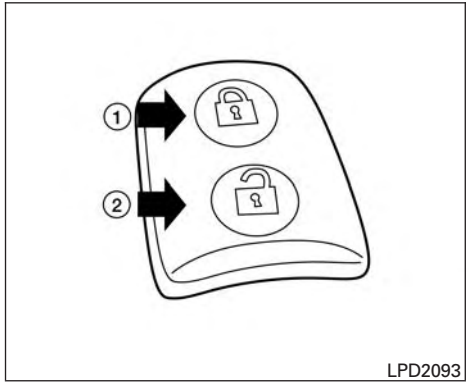

LOCKING WITH POWER DOOR LOCK SWITCH

To lock all the doors without a key, push the door lock switch (driver's or front passenger's side) to the lock position ①. When locking the door this way, be certain not to leave the key inside the vehicle.

To unlock all the doors without a key, push the door lock switch (driver's or front passenger's side) to the unlock position ②.

Lockout protection

When the power door lock switch is moved to the lock position and any door is open, all doors will lock and unlock automatically. With the Intelligent Key left in the vehicle and any door open, all doors will unlock automatically and a chime will sound after the door is closed.

These functions help to prevent the Intelligent Key from being accidentally locked inside the vehicle.

AUTOMATIC DOOR LOCKS

- All doors lock automatically when the vehicle speed reaches 15 mph (24 km/h).
- All doors unlock automatically when the ignition is placed in the OFF position.

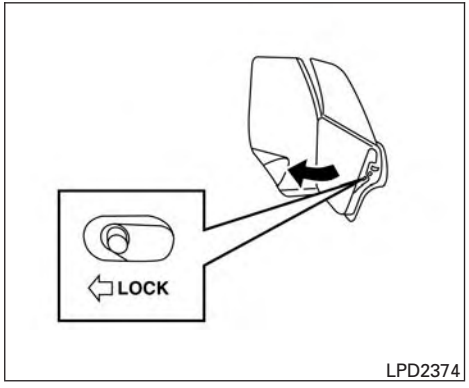

CHILD SAFETY REAR DOOR LOCK

Child safety locks help prevent the rear doors from being opened accidentally, especially when small children are in the vehicle.

The child safety lock levers are located on the edge of the rear doors.

When the lever is in the LOCK position, the door can be opened only from the outside.

⚠ WARNING

- **Radio waves could adversely affect electric medical equipment. Those who use a pacemaker should contact the electric medical equipment manufacturer for the possible influences before use.**
- **The Intelligent Key transmits radio waves when the buttons are pressed. The FAA advises the radio waves may affect aircraft navigation and communication systems. Do not operate the Intelligent Key while on an airplane. Make sure the buttons are not operated unintentionally when the unit is stored for a flight.**

The Intelligent Key system can operate all the door locks using the remote control function or pushing the request switch on the vehicle without taking the key out from a pocket or purse. The operating environment and/or conditions may affect the Intelligent Key system operation.

Be sure to read the following before using the Intelligent Key system.

⚠ CAUTION

- **Be sure to carry the Intelligent Key with you when operating the vehicle.**
- **Never leave the Intelligent Key in the vehicle when you leave the vehicle.**

The Intelligent Key is always communicating with the vehicle as it receives radio waves. The Intelligent Key system transmits weak radio waves. Environmental conditions may interfere with the operation of the Intelligent Key system under the following operating conditions:

- When operating near a location where strong radio waves are transmitted, such as a TV tower, power station and broadcasting station.
- When in possession of wireless equipment, such as a cellular telephone, transceiver, or a CB radio.
- When the Intelligent Key is in contact with or covered by metallic materials.
- When any type of radio wave remote control is used nearby.
- When the Intelligent Key is placed near an electric appliance such as a personal computer.
- When the vehicle is parked near a parking meter.

In such cases, correct the operating conditions before using the Intelligent Key function or use the mechanical key.

Although the life of the battery varies depending on the operating conditions, the battery's life is approximately two years. If the battery is discharged, replace it with a new one.

When the Intelligent Key battery is low, an indicator illuminates in the vehicle information display. For additional information, refer to "Vehicle information display" in the "Instruments and controls" section of this manual.

Since the Intelligent Key is continuously receiving radio waves, if the key is left near equipment which transmits strong radio waves, such as signals from a TV and personal computer, the battery life may become shorter.

For additional information, refer to "Battery replacement" in the "Do-it-yourself" section of this manual.

As many as four Intelligent Keys can be registered and used with one vehicle. For information about the purchase and use of additional Intelligent Keys, it is recommended that you visit a NISSAN dealer.

⚠ CAUTION

Listed below are conditions or occurrences which will damage the Intelligent Key:

- **Do not allow the Intelligent Key, which contains electrical components, to come into contact with water or salt water. This could affect the system function.**
- **Do not drop the Intelligent Key.**
- **Do not strike the Intelligent Key sharply against another object.**
- **Do not change or modify the Intelligent Key.**
- **Wetting may damage the Intelligent Key. If the Intelligent Key gets wet, immediately wipe until it is completely dry.**
- **Do not place the Intelligent Key for an extended period in an area where temperatures exceed 140°F (60°C).**
- **Do not attach the Intelligent Key with a key holder that contains a magnet.**
- **Do not place the Intelligent Key near equipment that produces a magnetic field, such as a TV, audio equipment and personal computers.**

If an Intelligent Key is lost or stolen, NISSAN recommends erasing the ID code of that Intelligent Key from the vehicle. This may prevent the unauthorized use of the Intelligent Key to operate the vehicle. For information regarding the erasing procedure, it is recommended that you visit a NISSAN dealer.

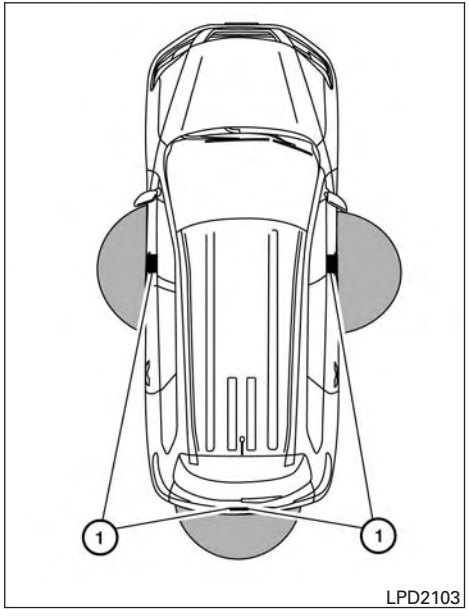

LPD2103

OPERATING RANGE

The Intelligent Key functions can only be used when the Intelligent Key is within the specified operating range from the request switch ①.

When the Intelligent Key battery is discharged or strong radio waves are present near the operating location, the Intelligent Key operating range becomes narrower, and the Intelligent Key may not function properly.

The operating range is within 31.5 in (80 cm) from each request switch ①.

If the Intelligent Key is too close to the door glass, handle or rear bumper, the request switches may not function.

When the Intelligent Key is within the operating range, it is possible for anyone, even someone who does not carry the Intelligent Key, to push the request switch to lock/unlock the doors.

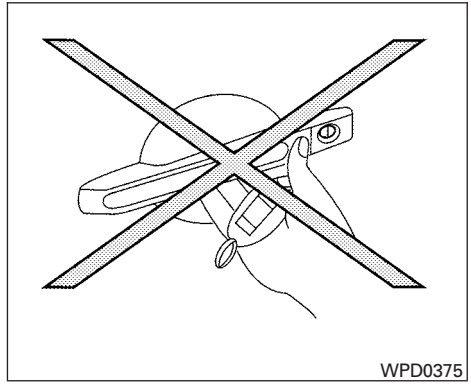
WPD0375

DOOR LOCKS/UNLOCKS PRECAUTION

- Do not push the door handle request switch with the Intelligent Key held in your hand as illustrated. The close distance to the door handle will cause the Intelligent Key system to have difficulty recognizing that the Intelligent Key is outside the vehicle.
- After locking with the door handle request switch, verify the doors are securely locked by testing them.

- To prevent the Intelligent Key from being left inside the vehicle, make sure you carry the Intelligent Key with you and then lock the doors.
- Do not pull the door handle before pushing the door handle request switch. The door will be unlocked but will not open. Release the door handle once and pull it again to open the door.

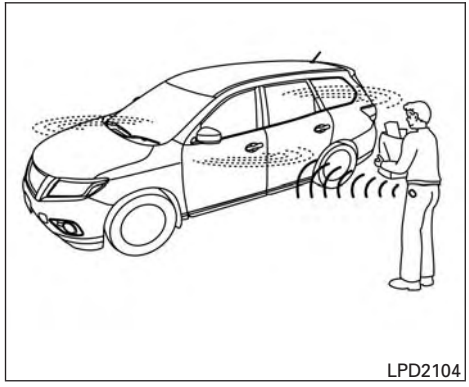
LPD2104

NISSAN INTELLIGENT KEY® OPERATION

You can lock or unlock the doors without taking the Intelligent Key out of your pocket or bag.

When you carry the Intelligent Key with you, you can lock or unlock all doors by pushing the door handle request switch within the range of operation.

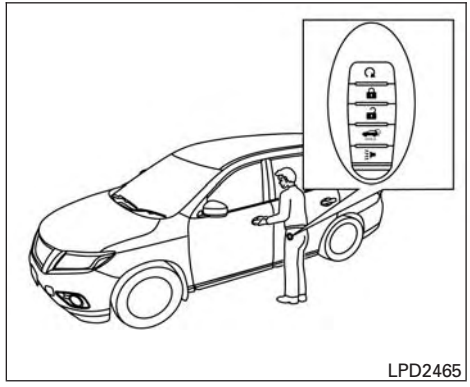
LPD2465

Locking doors

1. Move the shift lever to the P (Park) position, place the ignition switch in the LOCK position and make sure you carry the Intelligent Key with you.
2. Close all doors.
3. Push any door handle request switch while carrying the Intelligent Key with you.
4. All doors and the rear liftgate will lock.
5. The hazard warning lights flash twice and the outside buzzer sounds once.

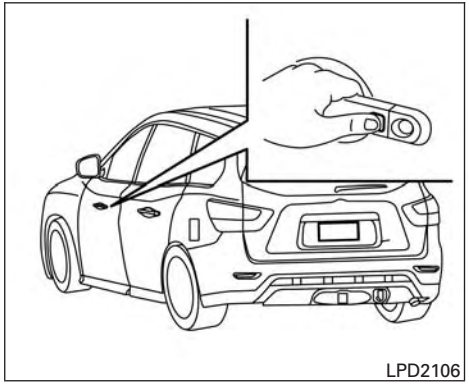

NOTE:

- **Request switches for all doors and liftgate can be deactivated when the I-Key Door Lock setting is switched to OFF in the vehicle settings of the vehicle information display. For additional information, refer to "Vehicle information display" in the "Instruments and controls" section of this manual.**
- **Doors lock with the door handle request switch while the ignition switch is not in the LOCK position.**
- **Doors do not lock by pushing the door handle request switch while any door is open. However, doors lock with the mechanical key even if any door is open.**
- **Doors do not lock with the door handle request switch with the Intelligent Key inside the vehicle and a beep sounds to warn you. However, when an Intelligent Key is inside the vehicle, doors can be locked with another Intelligent Key.**

⚠ CAUTION

- **After locking the doors using the request switch, make sure that the doors have been securely locked by operating the door handles or the rear liftgate opener switch.**
- **When locking the doors using the request switch, make sure to have the Intelligent Key in your possession before operating the request switch to prevent the Intelligent Key from being left in the vehicle.**
- **The request switch is operational only when the Intelligent Key has been detected by the Intelligent Key system.**

Lockout protection

To prevent the Intelligent Key from being accidentally locked in the vehicle, lockout protection is equipped with the Intelligent Key system.

When the driver's side door is open, the doors are locked, and then the Intelligent Key is put inside the vehicle and all the doors are closed; the lock will automatically unlock and the door buzzer sounds.

NOTE:

The doors may not lock when the Intelligent Key is in the same hand that is operating the request switch to lock the door. Put the Intelligent Key in a purse, pocket or your other hand.

⚠ CAUTION

The lockout protection may not function under the following conditions:

- **When the Intelligent Key is placed on top of the instrument panel.**
- **When the Intelligent Key is placed inside the glove box or a storage bin.**
- **When the Intelligent Key is placed inside the door pockets.**
- **When the Intelligent Key is placed inside or near metallic materials.**

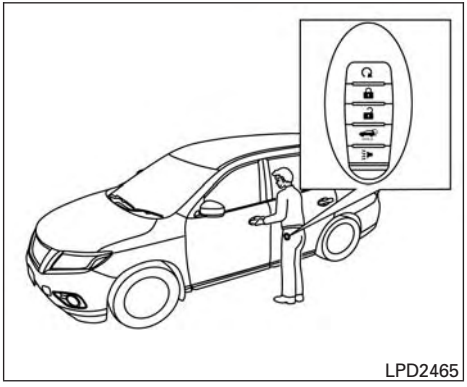
LPD2465

Unlocking doors

1. Carry the Intelligent Key.
2. Push the door handle request switch.
3. The hazard indicator lights flash once and the outside buzzer sounds once.
4. Push the door handle request switch again within 1 minute to unlock all doors.

For power liftgate opening:

1. Carry the Intelligent Key.
2. Push the power liftgate request switch.

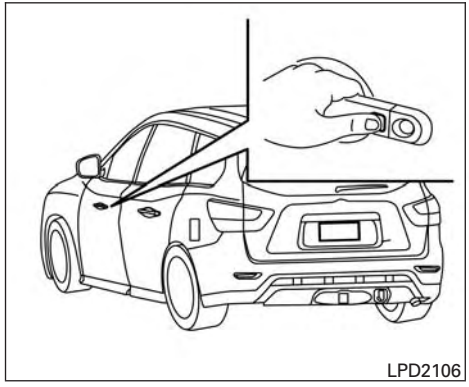
LPD2106

NOTE:

Request switches for all doors and liftgate can be deactivated when the I-Key Door Lock setting is switched to OFF in the vehicle settings of the vehicle information display. For additional information, refer to "Vehicle information display" in the "Instruments and controls" section of this manual.

If a door handle is pulled while unlocking the doors, that door may not be unlocked. Returning the door handle to its original position will unlock the door. If the door does not unlock after returning the door handle, push the door handle request switch to unlock the door.

All doors will be locked automatically unless one of the following operations is performed within 1 minute after pushing the request switch.

- Opening any door.
- Pushing the ignition switch.

The interior light timer illuminates for a period of time when a door is unlocked and the room light switch is in the DOOR position.

The interior light can be turned off without waiting by performing one of the following operations:

- Placing the ignition switch in the ON position.
- Locking the doors with the remote control.
- Switching the room light switch to the OFF position.
- Switching the Auto Room Lamp to the OFF position in vehicle settings of the vehicle information display. For additional information, refer to "Vehicle information display" in the "Instruments and controls" section of this manual.

HOW TO USE THE REMOTE KEYLESS ENTRY FUNCTION

The remote keyless entry function can operate all door locks using the remote keyless function of the Intelligent Key. The remote keyless function can operate at a distance of 33 ft (10 m) away from the vehicle. The operating distance depends upon the conditions around the vehicle.

The remote keyless entry function will not function under the following conditions:

- When the Intelligent Key is not within the operational range.
- When the doors or the rear liftgate are open or not closed securely.
- When the Intelligent Key battery is discharged.

⚠ CAUTION

When locking the doors using the Intelligent Key, be sure not to leave the key in the vehicle.

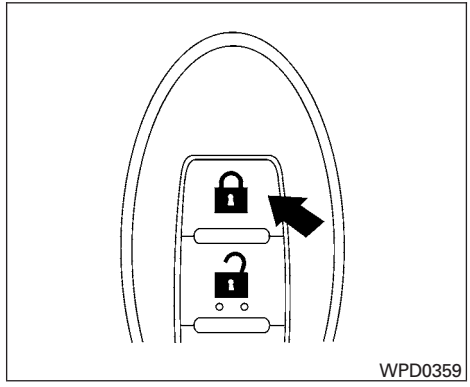

Locking doors

1. Place the ignition switch in the LOCK position.
2. Close all doors.
3. Press the button on the Intelligent Key.
4. The hazard indicator lights flash twice and the horn beeps once.
5. All doors will be locked.

⚠ CAUTION

After locking the doors using the Intelligent Key, be sure that the doors have been securely locked by operating the door handles.

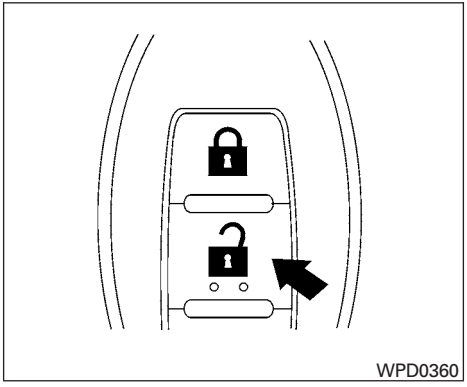

Unlocking doors

1. Press the button on the Intelligent Key.
2. The hazard indicator lights flash once.
3. Press the button again within 5 seconds to unlock all doors.

NOTE:

The unlocking operation can be changed in Selective door unlock in the vehicle settings of the vehicle information display. For additional information, refer to "Vehicle information display" in the "Instruments and controls" section of this manual.

All doors will be locked automatically unless one of the following operations is performed within 1 minute after pressing the button:

- Opening any doors.
- Pushing the ignition switch.

The interior light illuminates for a period of time when a door is unlocked and the room light switch is in the DOOR position.

The light can be turned off without waiting by performing one of the following operations:

- Placing the ignition switch in the ON position.
- Locking the doors with the Intelligent Key.
- Switching the room light switch to the OFF position.
- Switching the Auto Room Lamp to the OFF position in vehicle settings of the vehicle information display. For additional information, refer to "Vehicle information display" in the "Instruments and controls" section of this manual.

Opening windows

The Intelligent Key allows you to simultaneously open windows equipped with automatic operation.

- To open the windows, press the button on the Intelligent Key for **longer than 3 seconds** after all doors are unlocked.

The door windows will open while pressing the button on the Intelligent Key.

The door windows cannot be closed by using the Intelligent Key.

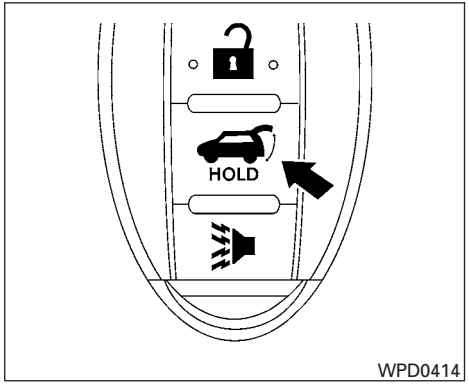

WPD0414

Releasing the rear liftgate (if so equipped)

The rear liftgate can be opened and closed by performing the following:

- Press the button for longer than 0.5 seconds to open the rear liftgate.
- Press the button again for longer than 0.5 seconds to close the rear liftgate.

When the button is pressed during the open or close process, the liftgate motors will stop. When the button is pressed again, the liftgate will reverse direction.

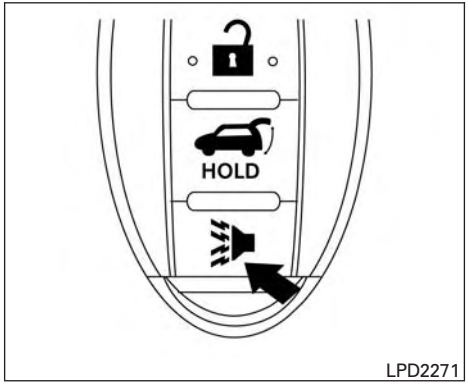

LPD2271

Using the panic alarm

If you are near your vehicle and feel threatened, you may activate the panic alarm to call attention by pressing and holding the button on the Intelligent Key for **longer than 0.5 seconds.** The panic alarm and headlights will stay on for a period of time.

The panic alarm stops when:

- It has run for a period of time, or
- Any button is pressed on the Intelligent Key.
- The request switch on the driver or passenger door is pushed and the Intelligent Key is in range of the door handle.

Linking the key fob to automatic drive positioner memory (if so equipped)

If the vehicle is equipped with automatic drive positioner, the key fob can be linked to a memory setting.

For additional information, refer to “Automatic drive positioner” in this section.

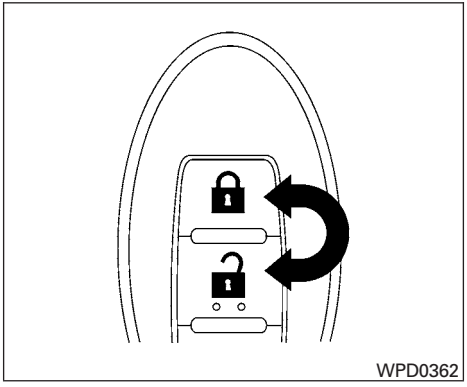

Answer back horn feature

If desired, the answer back horn feature can be deactivated using the Intelligent Key. When it is deactivated and the LOCK button is pressed, the hazard indicator lights flash twice. When the UNLOCK button is pressed, neither the hazard indicator lights nor the horn operates.

NOTE:

If you change the answer back horn and light flash feature with the Intelligent Key, the vehicle information display screen will show the current mode after the ignition switch has been cycled from the OFF to the ON position. The vehicle information display screen can also be used to change the answer back horn mode.

To deactivate: Press and hold the and buttons **for at least 2 seconds.** The hazard indicator lights will flash three times to confirm that the answer back horn feature has been deactivated.

To activate: Press and hold the and buttons **for at least 2 seconds once more.** The hazard indicator lights will flash once and the horn will sound once to confirm that the horn beep feature has been reactivated.

Deactivating the horn beep feature does not silence the horn if the alarm is triggered.

WARNING SIGNALS

To help prevent the vehicle from moving unexpectedly by erroneous operation of the Intelligent Key or to help prevent the vehicle from being stolen, a chime or buzzer sounds from inside and outside the vehicle and a warning is displayed in the instrument panel.

When a chime or beep sounds or a warning is displayed, be sure to check the vehicle and the Intelligent Key.

For additional information, refer to the “Troubleshooting guide” in this section and “Vehicle information display” in the “Instruments and controls” section of this manual.

TROUBLESHOOTING GUIDE

Verify the location of all Intelligent Keys that are programmed for the vehicle. If another Intelligent Key is in range or inside the vehicle, the vehicle system may respond differently than expected.

Symptom		Possible Cause	Remedy
When stopping the engine	The Shift to Park warning appears on the display and the inside warning chime sounds continuously.	The shift lever is not in the P (Park) position.	Move the shift lever to the P (Park) position.
When shifting the shift lever to the P (Park) position	The Push ignition to OFF warning appears in the display.	The ignition switch is in the ACC or ON position.	Place the ignition switch in the OFF position.
When opening the driver's door to get out of the vehicle	The Door Open warning appears on the display and the inside warning chime sounds continuously.	The ignition switch is in the ACC or ON position.	Place the ignition switch in the OFF position.
When closing the door after getting out of the vehicle	The No Key Detected warning appears on the display, the outside chime sounds three times and the inside warning chime sounds for approximately 3 seconds.	The ignition switch is in the ACC or ON position.	Place the ignition switch in the OFF position.
	The Shift to Park warning appears on the display and the outside chime sounds continuously.	The ignition switch is in the ACC position and the shift lever is not in the P (Park) position.	Move the shift lever to the P (Park) position and place the ignition switch in the OFF position.
When closing the door with the inside lock knob turned to LOCK	The outside chime sounds for approximately 3 seconds and all the doors unlock.	The Intelligent Key is inside the vehicle.	Carry the Intelligent Key with you.
When pushing the door handle request switch or the LOCK button on the Intelligent Key to lock the door	The outside chime sounds for approximately 2 seconds.	The Intelligent Key is inside the vehicle.	Carry the Intelligent Key with you.
When pushing the ignition switch to start the engine	The Intelligent Key battery indicator appears on the display.	The battery charge is low.	Replace the battery with a new one. For additional information, refer to "Battery replacement" in the "Do-it-yourself" section of this manual.
	The No Key Detected warning appears on the display, the outside chime sounds three times and the inside warning chime sounds for approximately 3 seconds.	The Intelligent Key is not in the vehicle.	Carry the Intelligent Key with you.
When pushing the ignition switch	The Intelligent Key system warning message in the vehicle information display appears.	It warns of a malfunction with the Intelligent Key system.	It is recommended that you visit a NISSAN dealer.

REMOTE ENGINE START (if so equipped)

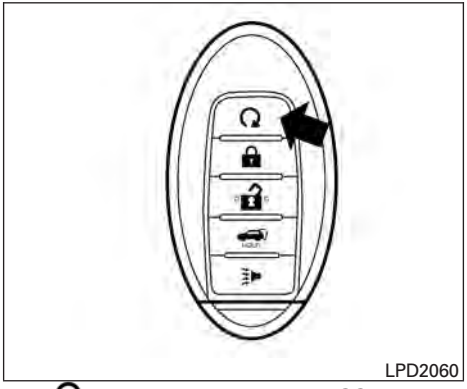

The button will be on the NISSAN Intelligent Key® if the vehicle has remote engine start. This feature allows the engine to start from outside the vehicle.

The following features may be affected when the remote start feature is used:

- Vehicles with manual or automatic climate control systems will default to the last used heating or cooling mode. For additional information, refer to “Remote engine start logic” in the “Monitor, climate, audio, phone and voice recognition systems” section of this manual.

Laws in some local communities may restrict the use of remote starters. For example, some laws require a person using remote start to have the vehicle in view. Check local regulations for any requirements.

Other conditions may affect the function of the Remote Engine Start feature. For additional information, refer to “Conditions the remote start will not work” in this section.

Other conditions can affect the performance of the Intelligent Key transmitter. For additional information, refer to “NISSAN Intelligent Key®” in this section.

REMOTE ENGINE START OPERATING RANGE

WARNING

To help avoid risk of injury or death through unintended operation of the vehicle and or its systems, including entrapment in windows or inadvertent door lock activation, do not leave children, people who require the assistance of others or pets unattended in your vehicle. Additionally, the temperature inside a closed vehicle on a warm day can quickly become high enough to cause a significant risk of injury or death to people and pets.

CAUTION

When the Intelligent Key battery is discharged or other strong radio wave sources are present near the operating location, the Intelligent Key operating range becomes narrower, and the Intelligent Key may not function properly.

The remote engine start function can only be used when the Intelligent Key is within the specified operating range from the vehicle.

The remote engine start operating range is approximately 197 ft (60 m) from the vehicle.

REMOTE STARTING THE VEHICLE

To use the remote start feature to start the engine perform the following:

1. Aim the Intelligent Key at the vehicle.
2. Press the LOCK button to lock all doors.
3. Within 5 seconds press and hold the remote start button until the turn signal lights flash and the tail lamps turn on. If the vehicle is not within view press and hold the remote start button for at least 2 seconds.

The following events will occur when the engine starts:

- The parking lights will turn on and remain on as long as the engine is running.
- The doors will be locked and the climate control system may come on.
- The engine will continue to run for 10 minutes. Repeat the steps to extend the time for an additional 10 minutes. For additional information, refer to “Extending engine run time” in this section.

Depress and hold the brake then push the push-button ignition switch to the ON position before driving. For additional information, refer to “Driving the vehicle” in the “Starting and driving” section of this manual.

EXTENDING ENGINE RUN TIME

The remote start feature can be extended one time by performing the steps listed in “Remote starting the vehicle” in this section. Run time will be calculated as follows:

- The first 10 minute run time will start when the remote start function is performed.
- The second 10 minutes will start immediately when the remote start function is performed again. For example, if the engine has been running for 5 minutes, and 10 minutes are added, the engine will run for a total of 15 minutes.
- Extending engine run time will bring you to the two remote start limit.

A maximum of two remote starts, or a single start with an extension, are allowed between ignition cycles.

The ignition switch must be cycled to the ON position and then back to the OFF position before the remote start procedure can be used again.

CANCELING A REMOTE START

To cancel a remote start, perform one of the following:

- Aim the Intelligent Key at the vehicle and press until the parking lights turn off.
- Turn on the hazard warning flashers.
- Cycle the ignition switch ON and then OFF.
- The extended engine run time has expired.
- The first 10 minute timer has expired.
- The engine hood has been opened.
- The shift lever is moved out of park.
- The alarm sounds due to illegal entry into the vehicle.
- The ignition switch is pushed without an Intelligent Key in the vehicle.
- The ignition switch is pushed with an Intelligent Key in the vehicle but the brake pedal is not depressed.

CONDITIONS THE REMOTE START WILL NOT WORK

The remote start will not operate if any of the following conditions are present:

- The ignition switch is placed in the ON position.
- The hood is not securely closed.
- The hazard indicator lights are on.
- The engine is still running. The engine must be completely stopped. Wait at least 6 seconds if the engine goes from running to off. This is not applicable when extending engine run time.
- The remote start button is not pressed and held for at least 2 seconds.

- The remote start button is not pressed and held within 5 seconds of pressing the lock button.
- The brake is pressed.
- The doors are not closed and locked.
- The liftgate is open.
- The I–Key indicator message is displayed in the vehicle information display.
- The alarm sounds due to illegal entry into the vehicle.
- Two remote vehicle starts, or a single remote start with an extension, have already been used.
- The vehicle is not in P (Park).
- There is a detected registered key already inside of the vehicle.
- The remote start function has been switched to the OFF position in vehicle settings of the vehicle information display. For additional information, refer to “Vehicle information display” in the “Instruments and controls” section of this manual.

The remote engine start may display a warning or indicator in the vehicle information display. For additional information, refer to “Vehicle information display” in the “Instruments and controls” section of this manual.

HOOD

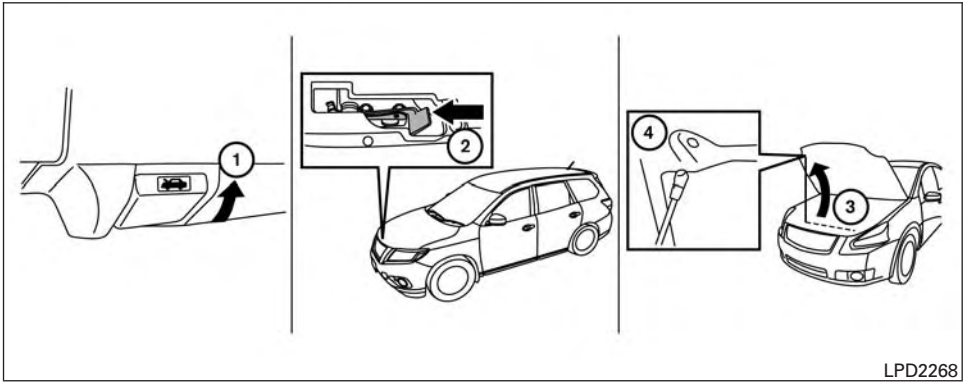

LPD2268

1. Pull the hood lock release handle ① located below the driver side instrument panel. The hood will spring up slightly.
2. Push the lever ② at the front of the hood to the side as illustrated with your fingertips
3. Raise the hood ③.
4. Remove the support rod and insert into the slot ④.

When closing the hood, lower it slowly and make sure it locks into place.

WARNING

- **Make sure the hood is completely closed and latched before driving. Failure to do so could cause the hood to fly open and result in an accident.**
- **If you see steam or smoke coming from the engine compartment, to avoid injury do not open the hood.**

WARNING

- **Always be sure the liftgate has been closed securely to prevent it from opening while driving.**
- **Do not drive with the liftgate open. This could allow dangerous exhaust gases to be drawn into the vehicle. For additional information, refer to "Exhaust gas (carbon monoxide)" in the "Starting and driving" section of this manual.**
- **To help avoid risk of injury or death through unintended operation of the vehicle and or its systems, including entrapment in windows or inadvertent door lock activation, do not leave children, people who require the assistance of others or pets unattended in your vehicle. Additionally, the temperature inside a closed vehicle on a warm day can quickly become high enough to cause a significant risk of injury or death to people and pets.**
- **Always be sure that hands and feet are clear of the door frame to avoid injury while closing the liftgate.**

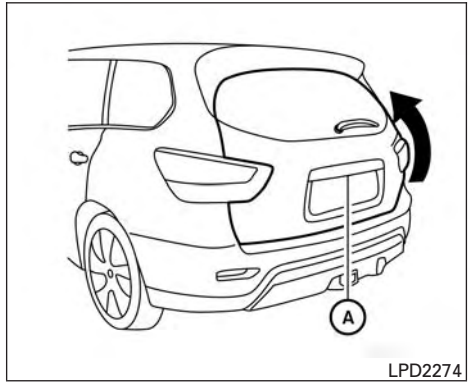

LPD2274

OPERATING THE MANUAL LIFTGATE (if so equipped)

The power door lock system allows you to lock or unlock all doors including the liftgate simultaneously.

To open the liftgate, press the request switch Ⓐ and pull up on the handle.

To close, lower and push the liftgate down securely.

OPERATING THE POWER LIFTGATE (if so equipped)

WARNING

- **Make sure that all passengers have their hands, etc., inside the vehicle before closing the liftgate.**
- **Do not leave children unattended inside the vehicle. They could unknowingly activate switches or controls. Unattended children could become involved in serious accidents.**

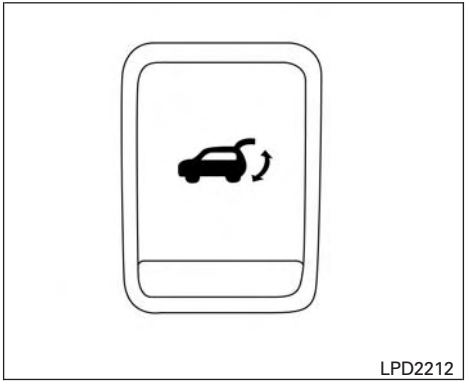

Instrument panel switch

NOTE:

To open, close or reverse the power liftgate, the shift lever must be in P (Park). Also, the power liftgate will not operate if battery voltage is low.

Power Open:
The power liftgate automatically moves from the fully closed position to the fully open position in approximately 5 – 8 seconds. The power open feature can be activated by the switch on the key fob, the instrument panel switch or the liftgate open switch. A chime sounds to indicate the power open sequence has been started.

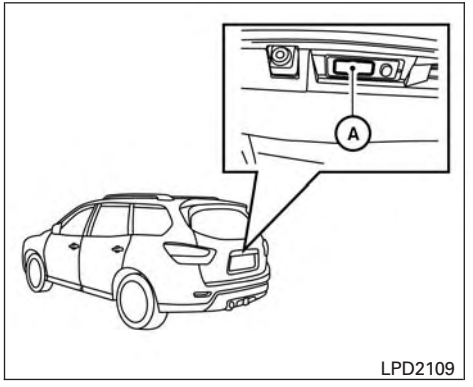

Liftgate opener switch

- When the vehicle is locked, the liftgate can be opened by the instrument panel switch, key fob or liftgate opener switch Ⓐ (with key fob in liftgate range). The liftgate will individually unlock and open. Once the liftgate is closed, the vehicle will remain in the unlock status.
- The key fob button must be held for 0.5 seconds before the liftgate opens.
- The liftgate must be unlocked to open it with the liftgate opener switch Ⓐ and without key fob in liftgate range.
- The switch on the liftgate Ⓐ can only be used to open the liftgate if the MAIN switch (located in the Instrument panel) is in the ON position.

A warning chime will sound if the shift lever is moved out of P (Park) during a power open operation.

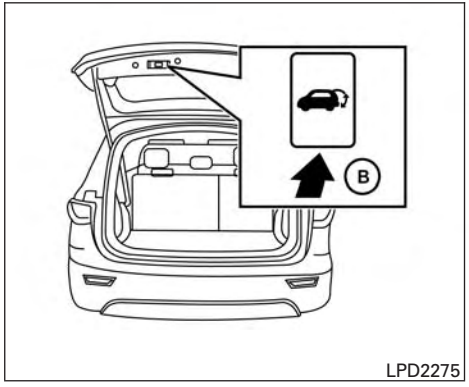

Power Close:
The power liftgate automatically moves from the fully open position to the secondary position. When the liftgate reaches the secondary position, the cinching motor engages and pulls the liftgate to its primary latch position. Power close takes approximately 7 – 10 seconds. The power close feature can be activated by the switch on the key fob, the instrument panel or the liftgate switch Ⓑ. A chime sounds to indicate the power close sequence has been started.

- If the liftgate opener switch Ⓐ is activated while the cinching motor is engaged, the cinching motor will disengage and release the latch.
- The key fob button must be held for 0.5 seconds before the liftgate closes.
- The switch on the liftgate Ⓑ can only be used to close the liftgate if the power liftgate main switch is in the ON position.

Stop - Reverse:
During an open/close movement, the liftgate can be stopped, if the Intelligent Key, instrument panel or liftgate switch (Ⓐ or Ⓑ) is pressed. The liftgate can be reversed if the Intelligent Key, instrument panel or liftgate switch (Ⓐ or Ⓑ) is pressed again.

Auto Reverse:
If an obstacle is detected during power open or power close, a warning chime will sound and the liftgate will reverse direction and return to the full open or full close position. If a second obstacle is detected, the liftgate motion will stop and the liftgate will enter manual mode.

A pinch strip is mounted on each side of the liftgate. If an obstacle is detected by a pinch strip during power close, the liftgate will reverse direction and return to the full open position.

NOTE:

If the pinch strip is damaged or removed, the power close function will not operate.

⚠WARNING

There are some small distances immediately before the closed position which cannot be detected. Make sure that all passengers have their hands, etc., inside the vehicle before closing the liftgate.

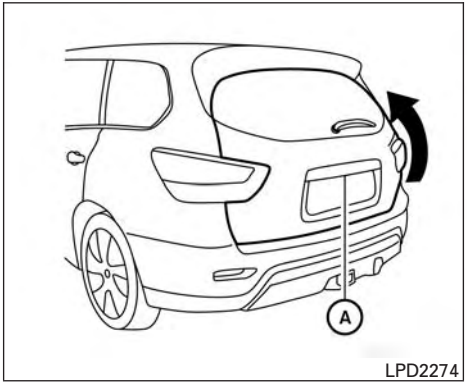

LPD2274

Manual Mode:
If power operation is not available, the liftgate may be operated manually. Power operation may not be available if the power liftgate main switch is in the ON position, if multiple obstacles have been detected in a single power cycle, or if battery voltage is low.

If the power liftgate opener switch Ⓐ is pushed during power open or close, the power operation will be canceled and the liftgate can be operated manually.

To open the liftgate manually, press the liftgate opener switch Ⓐ and lift the liftgate.

To close, lower and push the liftgate down securely.

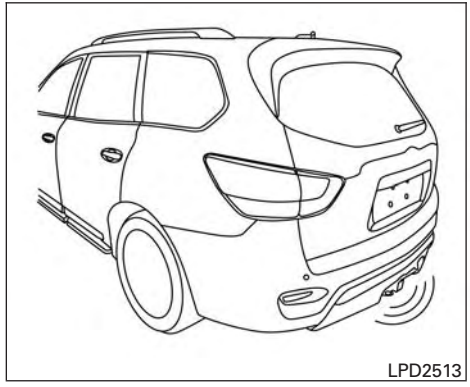
LPD2513

MOTION-ACTIVATED LIFTGATE (if so equipped)

The liftgate can be opened/closed using a foot kicking motion when it is locked or unlocked. Two sensors along the rear bumper (center area) can detect a forward kicking motion Ⓑ. The Intelligent Key must be present within 3 ft (1 m) of the liftgate to allow using the hands free feature to open/close the liftgate.

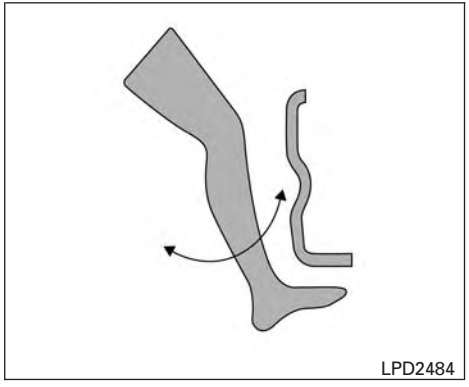

Example of a proper kick

NOTE:

To achieve proper motion activation, kick within the kicking zone Ⓐ 2 ft (60 cm). Improper kicking either from side to side Ⓒ or at angles Ⓓ will not open/close the liftgate.

⚠ CAUTION

Before performing the kicking motion, steady your stance to prevent any loss of balance. Also, while making the kicking motion, take caution around hot exhaust system parts. Otherwise, there may be danger of injury.

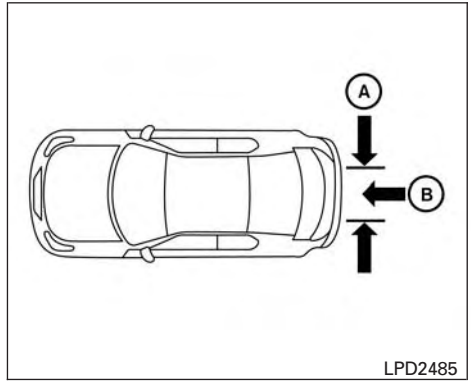

Proper kicking zone and method

While positioned at the rear of the vehicle (center) at arms' length distance away, begin making the forward kicking motion. Kick the foot under the rear bumper then immediately return the foot back to standing position. The kicking motion should be straight, smooth and consistent. Your leg does not need to touch the bumper surface but be within 3/4 inch (2 cm) to 4 inches (10 cm) of the bumper surface. After your kick motion is completed step back to allow the liftgate to open/close. The liftgate should begin moving within 1–2 seconds after the kick. This time is needed to verify the Intelligent Key and to validate the kick motion. Kicking again within this time frame (1–2 seconds) could cause the liftgate to reverse or stop.

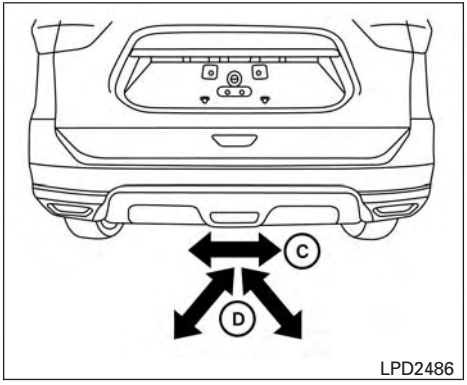

Improper kicking methods

⚠ WARNING

Prevent unintentional liftgate opening/closing. There may be conditions when opening/closing the liftgate is not desired. Keep the Intelligent Key out of the range of the liftgate (3 ft or 1 m), when washing or working around the back of the vehicle.

⚠ CAUTION

Interference or malfunction can be caused by parking in close proximity to radio or satellite towers.

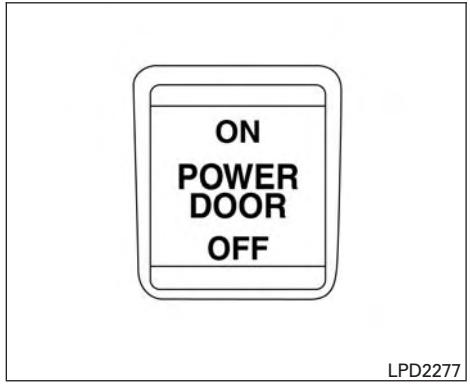

POWER LIFTGATE MAIN SWITCH

The power liftgate operation can be turned on or off by the power liftgate main switch on the instrument panel.

When the power liftgate main switch is pushed to the OFF position, the power operation is not available by the power liftgate switch on the liftgate and liftgate opener switch.

Power operation is available when in the OFF position by the instrument panel switch and the key fob button.

Motion-Activated Liftgate (if so equipped) will not function when the power liftgate main switch is pushed in the OFF position.

LIFTGATE RELEASE

⚠ WARNING

- **Always be sure the liftgate has been closed securely to prevent it from opening while driving.**
- **Do not drive with the liftgate open. This could allow dangerous exhaust gases to be drawn into the vehicle. For additional information, refer to "Exhaust gas (carbon monoxide)" in the "Starting and driving" section of this manual.**
- **To avoid personal injury, do not attempt to activate the power liftgate if one or both of the liftgate struts are removed.**

⚠ CAUTION

- **If the power liftgate does not stay open or if the liftgate unexpectedly closes at any time while a continuous warning chime sounds, do not operate the liftgate. There may be a pressure loss in one or both of the liftgate struts. It is recommended that you have the liftgate inspected. It is recommended that you visit a NISSAN dealer for this service.**
- **Do not activate the power liftgate if one or both of the liftgate struts are removed. Damage to the liftgate or power liftgate mechanisms may occur.**
- **Keep the power liftgate main switch in the OFF position when washing or working around the back of the vehicle (with Intelligent Key) to prevent inadvertent opening/closing.**

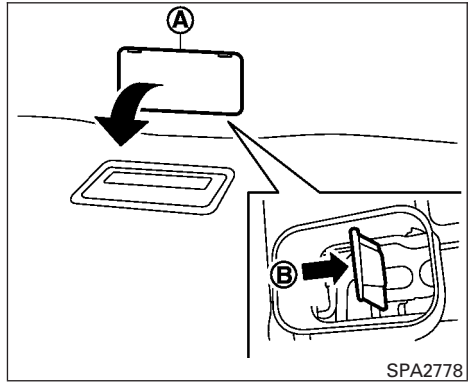

Manual liftgate release (if so equipped)

If the liftgate cannot be locked or unlocked with the door lock switch or the key fob due to a discharged battery, follow these steps:

1. Remove the cover Ⓐ on the inside of the liftgate.
2. Move the lever Ⓑ as illustrated to open the liftgate.

It is recommended that you visit a NISSAN dealer as soon as possible for repair.

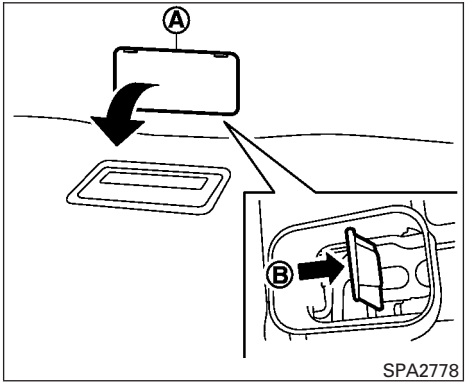

SPA2778

Power liftgate release (if so equipped)

If the liftgate cannot be opened with the instrument panel switch, liftgate opener switch or key fob due to a discharged battery, follow these steps:

1. Remove the cover Ⓐ on the inside of the liftgate.
2. Move the lever Ⓑ as illustrated to open the liftgate.

It is recommended that you visit a NISSAN dealer as soon as possible for repair.

LIFTGATE POSITION SETTING

The liftgate can be set to open to a specific height by performing the following:

1. Open the liftgate using the request switch or the Intelligent Key.
2. Pull the liftgate down to the desired position and hold the liftgate (the liftgate will have some resistance when being manually adjusted).
3. While holding the liftgate in position, push and hold the liftgate switch located on the liftgate for approximately 5 seconds or until three beeps are heard.

The liftgate will open to the selected position setting. To change the position of the liftgate, repeat Steps 1-3 for setting the position of the liftgate.

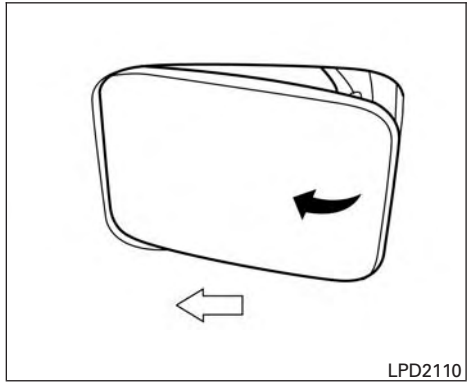
LPD2110

OPENING THE FUEL-FILLER DOOR

The fuel-filler door automatically unlocks when the driver's door is unlocked.

1. Unlock the fuel-filler door using one of the following operations:
   - Unlock the driver's door with the key fob.
   - Unlock the driver's door with the key.
   - Push the power door lock switch to the unlock position.
   - Push the door handle request switch (with the key fob in range).

2. To open the fuel-filler door, push the right side of the fuel-filler door to release.

To lock, close the fuel-filler door securely and lock the doors.

FUEL-FILLER CAP

⚠ WARNING

- **Gasoline is extremely flammable and highly explosive under certain conditions. You could be burned or seriously injured if it is misused or mishandled. Always stop the engine and do not smoke or allow open flames or sparks near the vehicle when refueling.**
- **Do not attempt to top off the fuel tank after the fuel pump nozzle shuts off automatically. Continued refueling may cause fuel overflow, resulting in fuel spray and possibly a fire.**
- **Use only an original equipment type fuel-filler cap as a replacement. It has a built-in safety valve needed for proper operation of the fuel system and emission control system. An incorrect cap can result in a serious malfunction and possible injury. It could also cause the Malfunction Indicator Light (MIL) to come on.**
- **Never pour fuel into the throttle body to attempt to start your vehicle.**
- **Do not fill a portable fuel container in the vehicle or trailer. Static electricity can cause an explosion of flammable liquid, vapor or gas in any vehicle or trailer. To reduce the risk of serious injury or death when filling portable fuel containers:**
  - **Always place the container on the ground when filling.**
  - **Do not use electronic devices when filling.**
  - **Keep the pump nozzle in contact with the container while you are filling it.**
  - **Use only approved portable fuel containers for flammable liquid.**

⚠ CAUTION

- **Do not use E-15 or E-85 fuel in your vehicle. For additional information, refer to "Fuel recommendation" in the "Technical and consumer information" section of this manual.**
- **The LOOSE FUEL CAP warning message will be displayed/warning will appear if the fuel-filler cap is not properly tightened. It may take a few driving trips for the message to be displayed. Failure to tighten the fuel-filler cap properly after the LOOSE FUEL CAP warning message is displayed/warning appears may cause the Malfunction Indicator Light (MIL) to illuminate.**
- **Failure to tighten the fuel-filler cap properly may cause the Malfunction Indicator Light (MIL) to illuminate. If the light illuminates because the fuel-filler cap is loose or missing, tighten or install the cap and continue to drive the vehicle. The light should turn off after a few driving trips. If the light does not turn off after a few driving trips, have the vehicle inspected. It is recommended that you visit a NISSAN dealer for this service.**
- **For additional information, refer to "Malfunction Indicator Light (MIL)" in the "Instruments and controls" section of this manual.**
- **If fuel is spilled on the vehicle body, flush it away with water to avoid paint damage.**

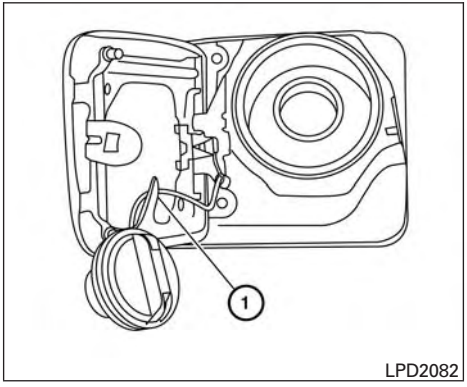

LPD2082

To remove the fuel-filler cap:

1. Turn the fuel-filler cap counterclockwise to remove.
2. Put the fuel-filler cap on the cap holder ① while refueling.

To install the fuel-filler cap:

1. Insert the fuel-filler cap straight into the fuel-filler tube.
2. Turn the fuel-filler cap clockwise until a single click is heard.

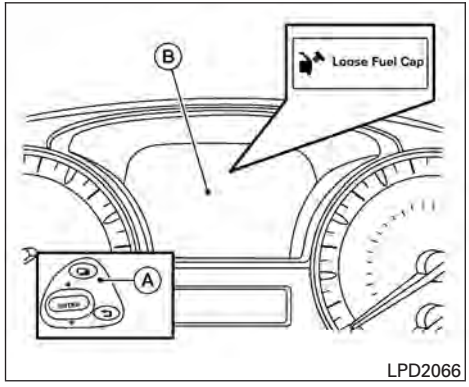

LPD2066

LOOSE FUEL CAP warning

The LOOSE FUEL CAP warning appears in the vehicle information display when the fuel-filler cap is not tightened correctly after the vehicle has been refueled. It may take a few driving trips for the message to be displayed. To turn off the warning, perform the following:

1. Remove and install the fuel-filler cap as soon as possible. For additional information, refer to “Fuel-filler cap” in this section.
2. Tighten the fuel-filler cap until it clicks.
3. Press the ❑ button Ⓐ on the steering wheel for about 1 second to turn off the LOOSE FUEL CAP warning Ⓑ after tightening the fuel-filler cap.

⚠ WARNING

- **Do not adjust the steering wheel while driving. You could lose control of your vehicle and cause an accident.**
- **Do not adjust the steering wheel any closer to you than is necessary for proper steering operation and comfort. The driver's air bag inflates with great force. If you are unrestrained, leaning forward, sitting sideways or out of position in any way, you are at greater risk of injury or death in a crash. You may also receive serious or fatal injuries from the air bag if you are up against it when it inflates. Always sit back against the seatback and as far away as practical from the steering wheel. Always use the seat belts.**

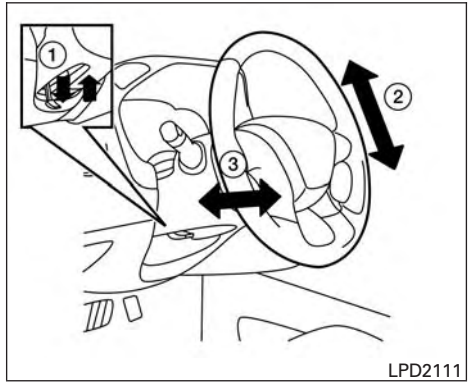

LPD2111

MANUAL OPERATION (if so equipped)

Tilt and telescopic operation

Pull the lock lever ① down:

- Adjust the steering wheel up or down in direction ② to the desired position.
- Adjust the steering wheel forward or backward in direction ③ to the desired position.

Push the lock lever ① up firmly to lock the steering wheel in place.

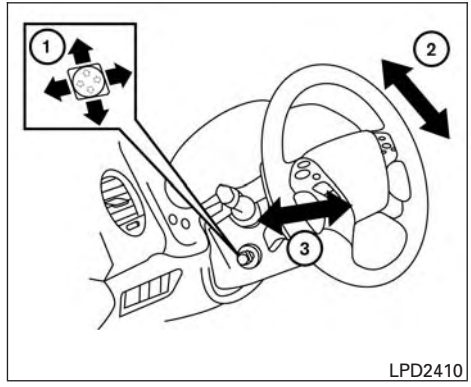

LPD2410

AUTOMATIC OPERATION (if so equipped)

Tilt and telescopic operation

To adjust the steering wheel move the switch ① in the following directions:

- Adjust the steering wheel up or down in direction ② to the desired tilt position.
- Adjust the steering wheel forward or backward in direction ③ to the desired telescopic position.

⚠CAUTION

For vehicles with automatic drive positioner: Failure to reset the tilt and telescoping functions of the steering wheel, after the vehicle's battery has been discharged, may prevent the steering wheel position from being adjusted.

For vehicles with automatic drive positioner: Both the tilt and telescopic steering operation must be reset after the vehicle's battery has been discharged in order to prevent the tilt and telescopic operation from locking in one position. When the battery has been recharged or replaced, perform the following:

- For tilt operation, adjust the switch ① so the steering wheel moves to the highest position ② that can be reached.
- For telescopic operation, adjust the switch ① so the steering wheel moves to the most forward and backward position ③ that can be reached.

Performing these operations resets the range of the steering wheel's tilt and telescopic function.

Entry/Exit function (if so equipped)

The automatic drive positioner system will make the steering wheel move up automatically when the driver's door is opened and the ignition switch is in the LOCK position. This lets the driver get into and out of the seat more easily. The steering wheel moves back into position when the driver's door is closed and the ignition switch is pushed.

For additional information, refer to "Automatic drive positioner" in this section.

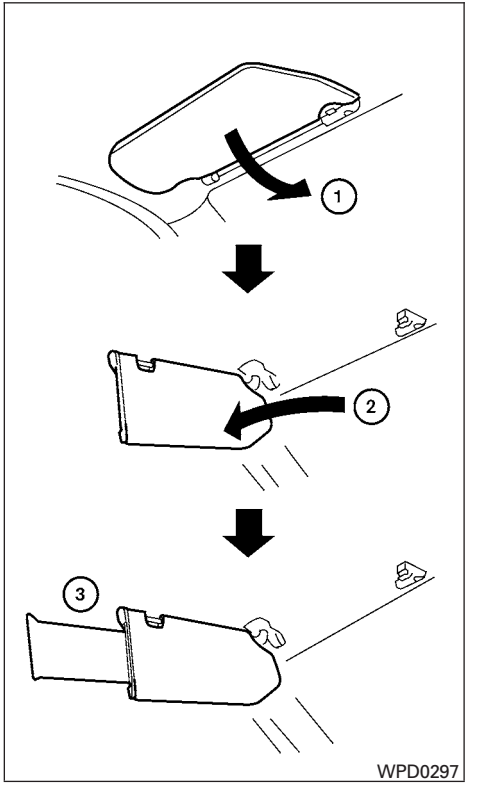

1. To block glare from the front, swing down the sun visor ①.
2. To block glare from the side, remove the sun visor from the center mount and swing the visor to the side ②.
3. Slide the extension ③ sun visor in or out as needed.

⚠ CAUTION

- **Do not store the sun visor before returning the extension to its original position.**
- **Do not pull the extension sun visor forcibly downward.**

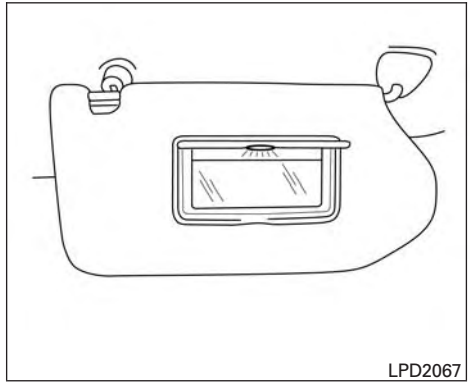
LPD2067

VANITY MIRRORS

To access the vanity mirror, pull the sun visor down and flip open the mirror cover. Some vanity mirrors are illuminated (if so equipped) and turn on when the mirror cover is open.

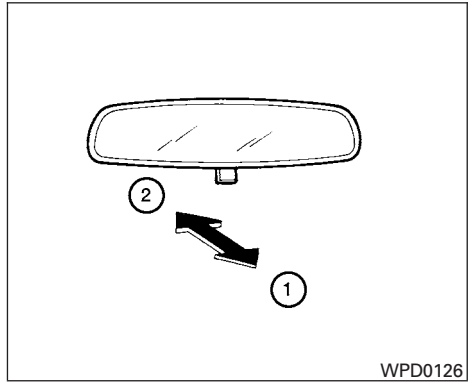

WPD0126

MANUAL ANTI-GLARE REARVIEW MIRROR (if so equipped)

Use the night position ① to reduce glare from the headlights of vehicles behind you at night.

Use the day position ② when driving in daylight hours.

⚠ WARNING

Use the night position only when necessary, because it reduces rear view clarity.

AUTOMATIC ANTI-GLARE REARVIEW MIRROR (if so equipped)

The inside mirror is designed so that it automatically dims during night time conditions and according to the intensity of the headlights of the vehicle following you. The automatic anti-glare feature is activated when the ignition switch is in the ON position.

The indicator light ② will illuminate when the automatic anti-glare feature is operating.

NOTE:

Do not hang any objects over the sensors ① or apply glass cleaner to the sensors. Doing so will reduce the sensitivity of the sensors, resulting in improper operation.

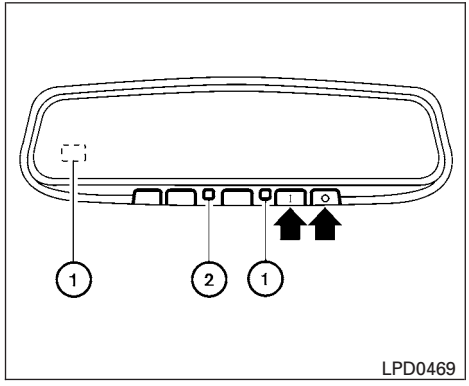

Type A - Without compass (if so equipped)

Type A and Type B (if so equipped)

The indicator light ② will illuminate when the automatic anti-glare feature is operating.

To turn off the automatic anti-glare feature, press:

- the O button for inside mirrors without compass.
- the ⏻ button for inside mirrors with compass.

The indicator light will turn off.

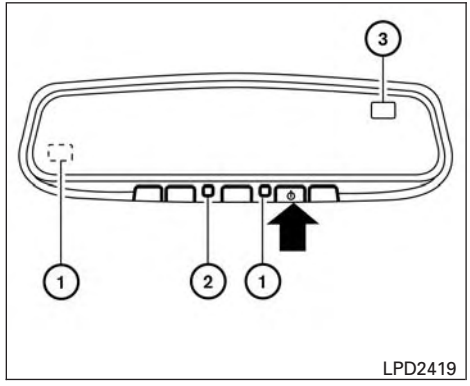

Type B - With compass (if so equipped)

To turn on the automatic anti-glare feature again, press:

- the | button for inside mirrors without compass.
- the ⏻ button for inside mirrors with compass.

The indicator light will turn on.

For additional information on HomeLink® Universal Transceiver (if so equipped) operation, refer to “HomeLink® Universal Transceiver” in the “Instruments and controls” section of this manual.

For additional information on the compass display ③ (if so equipped), refer to “Compass display” in the “Instruments and controls” section of this manual.

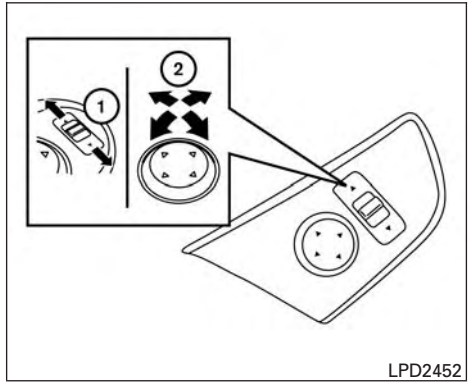

LPD2452

OUTSIDE MIRRORS

The outside mirror remote control will operate only when the ignition switch is in the ACC or ON position.

Move the small switch ① to select the left or right mirror. Adjust each mirror to the desired position using the large switch ②.

⚠ WARNING

- **Objects viewed in the outside mirror on the passenger side are closer than they appear. Be careful when moving to the right. Using only this mirror could cause an accident. Use the inside mirror or glance over your shoulder to properly judge distances to other objects.**
- **Do not adjust the mirrors while driving. You could lose control of your vehicle and cause an accident.**

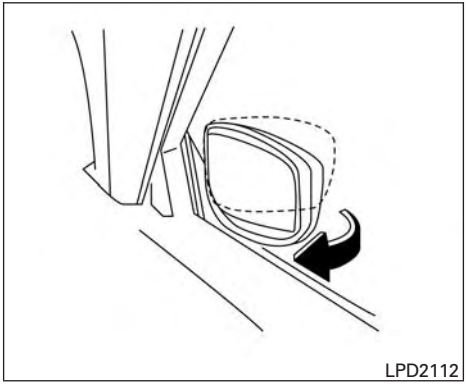

Manual folding outside mirrors

Pull the outside mirror toward the door to fold it.

Reverse tilt-down feature (if so equipped)

The reverse tilt-down feature will turn both outside mirror surfaces downward to provide better rear visibility close to the vehicle when the mirror control switch is in either the L or R position.

The mirrors automatically return to their original position when you shift out of R (Reverse).

The outside mirror surfaces will return to their original position when one of the following conditions has occurred:

- The shift lever is moved to any position other than R (Reverse).
- The outside mirror control switch is set to the neutral or center position.
- The ignition switch is placed in the OFF position.

NOTE:

If the outside mirror control switch is in the "center" position, the mirror surface will NOT turn downward when the shift lever is moved to R (Reverse).

For additional information, refer to "Automatic drive positioner" in this section.

Heated mirrors (if so equipped)

Some outside mirrors can be heated to defrost, defog, or de-ice for improved visibility. For additional information, refer to "Rear window and outside mirror (if so equipped) defroster switch" in the "Instruments and controls" section of this manual.

AUTOMATIC DRIVE POSITIONER (if so equipped)

The automatic drive positioner system has two features:

- Memory storage function
- Entry/exit function

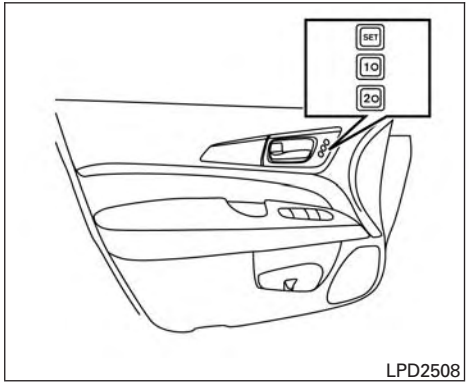

MEMORY STORAGE FUNCTION

Two positions for the driver's seat, steering column (if so equipped), and outside mirrors can be stored in the automatic drive positioner memory. Follow these procedures to use the memory system.

1. Place the ignition in the ON or ACC position (the vehicle should be stopped while setting the memory).
2. Adjust the driver's seat, steering column (if so equipped), and outside mirrors to the desired positions by manually operating each adjusting switch. For additional information, refer to "Seats" in the "Safety—Seats, seat belts and supplemental restraint system" section of this manual, and "Tilt/Telescopic Steering" and "Outside mirrors" in this section.
3. Push the SET switch and, within 5 seconds, push the memory switch (1 or 2).
4. The indicator light for the pushed memory switch will come ON and stay ON for approximately 5 seconds.
5. The chime will sound if the memory has been stored.

NOTE:

If a NEW memory position is stored in the same memory switch, the previous memory position will be overwritten by the new stored position.

Confirming memory storage

Push the SET switch.

- If a memory position has not been stored in the switch (1 or 2) the indicator light for the respective switch will come ON for approximately 0.5 seconds.
- If a memory position has been stored in the switch (1 or 2) then the indicator light for the respective switch will stay ON for approximately 5 seconds.

Linking a key fob to a stored memory position

Each key fob can be linked to a stored memory position (memory switch 1 or 2) with the following procedure.

1. Follow steps 1-3 in the "Memory Storage Function" section for storing the memory position.
2. The indicator light for the pushed memory switch will come ON. While the indicator light is ON for 5 seconds, press the button on the key fob. The indicator light of the linked memory switch will blink. After the indicator light goes off, the key fob is linked to that memory setting.

Once it is linked, when the ignition switch is placed in the OFF position, pressing the button on the key fob will move the driver's seat, steering wheel and outside mirrors to the linked memory switch position.

NOTE:

If a NEW memory position is stored in the linked memory switch, then the key fob will link the NEW position and overwrites the previous position.

ENTRY/EXIT FUNCTION

This system is designed so that the driver's seat and automatic operation steering column will automatically move when the shift lever is in the P (Park) position. This allows the driver to get into and out of the driver's seat more easily.

The driver's seat will slide backward and the steering column will move up:

- When the driver's door is opened with the ignition switch placed in the OFF position.
- When the ignition switch is changed from ACC to OFF with the driver's door open.

The driver's seat and steering wheel will return to the previous position:

- When the ignition switch is changed from ACC or ON while the shift lever is in the P (Park) position.

The entry/exit function can be adjusted or canceled through the vehicle settings in the vehicle information display by performing the following:

- Switch the Exit Seat Slide from ON to OFF.
- Switch the Exit Steering UP from ON to OFF.

Restarting the entry/exit function

If the battery cable is disconnected, or if the fuse opens, the stored memory positions will be lost and some of the functions will be restricted:

1. Drive the vehicle over 25 mph (40 km/h).

OR

2. Open and close the driver's door more than two times with the ignition switch in the OFF position.

The entry/exit function should now work properly.

SETTING MEMORY FUNCTION

The position of the following settings can be linked to the Intelligent Key and the memorized settings can be available for each Intelligent Key.

- Climate control system
- Navigation system (if so equipped)
- Audio system

To use the memory function, set the climate, navigation and audio systems to the driver's preferred settings. Lock the doors with the Intelligent Key. Each Intelligent Key may be set with the driver's individual preferences. When a new Intelligent Key is used, "Connection with the key has been done" will be displayed on the screen and the memorized settings are available.

To engage the memorized settings, perform the following:

1. Carry the Intelligent Key that is linked to the memorized settings.
2. Unlock the doors by pushing the driver's door handle request switch or the UNLOCK button on the Intelligent Key.
3. Place the ignition switch in the "ON" position. The settings linked to the Intelligent Key will start.

For additional information, refer to "Heater and air conditioner (automatic)" in the "Monitor, climate, audio, phone and voice recognition systems" section of this manual.

For additional information on using the Navigation System, refer to the separate Navigation System Owner's Manual.

For additional information on using the Audio system, refer to "Audio system" in the "Monitor, climate, audio, phone and voice recognition systems" section of this manual.

SYSTEM OPERATION

The automatic drive positioner system will not work or will stop operating under the following conditions:

- When the vehicle speed is above 0 mph (0 km/h) or 4 mph (7km/h) for some limited functions such as linking a key fob to the meter when the power source is turned on from off or during the Exit function.
- When any of the memory switches are pushed while the automatic drive positioner is operating.
- When the adjusting switch for the driver's seat and steering column is turned on while the automatic drive positioner is operating.
- When the seat has already been moved to the memorized position.
- When no seat position is stored in the memory switch.
- When the shift lever is moved from P (Park) to any other position.

MEMO

4 Monitor, climate, audio, phone and voice recognition systems

Safety Precautions. 4-4
Starting System 4-4
Start-up warning (models with navigation system) 4-4
Center Multi-Function Control Panel 4-5
Control panel 4-6
Multi-function controller 4-7
Steering wheel switch. 4-8
Touch panel operation 4-9
Operating menu screens 4-11
Scrolling list or message 4-11
Selecting item. 4-11
Adjusting settings 4-12
Character (letters and numbers) input screen 4-12
System status screen 4-13
Information and Settings 4-14
Information screen 4-14
Settings screen 4-16
RearView Monitor (if so equipped). 4-21
RearView Monitor system operation 4-22
How to read the displayed lines 4-22
Difference between predicted and actual distances 4-23
How to park with predicted course lines. 4-24
Adjusting the screen 4-26
How to turn on and off predicted course lines 4-26
RearView Monitor system limitations 4-26
System maintenance. 4-27
Around View® Monitor (if so equipped) 4-28
Around View® Monitor system operation. 4-29
Difference between predicted and actual distances 4-32
How to park with predicted course lines. 4-34
How to switch the display 4-35
Adjusting the screen 4-36
Around View® Monitor system limitations 4-36
System maintenance. 4-38
Camera Aiding Sonar (parking sensor) (if so equipped) 4-39
Sonar System Operation 4-40
Turning ON and OFF the sonar function. 4-40
Sonar System Limitations. 4-41
System Maintenance. 4-41
Moving Object Detection (MOD) (if so equipped) 4-42
MOD system operation. 4-43
Turning MOD on and off. 4-44

MOD system limitations 4-44
System maintenance 4-45
Vents 4-46
Heater and air conditioner (automatic)(if so equipped) 4-47
Automatic operation 4-49
Manual operation 4-50
Operating tips 4-51
Rear automatic air conditioning system 4-51
Servicing air conditioner 4-55
Audio system 4-55
Audio operation precautions 4-55
Names and functions of audio control buttons 4-68
Antenna 4-70
Audio main operation 4-70
Radio 4-72
Compact Disc (CD) player 4-76
USB (Universal Serial Bus) connection port 4-77
iPod® player 4-80
Bluetooth® streaming audio 4-82
Digital Versatile Disc (DVD) player 4-85
Auxiliary (AUX) devices 4-87
Mobile entertainment system (MES) (if so equipped) 4-88
Precautions 4-88
Technical information 4-89
Connecting rear media interface 4-96
Remote controller and headphones 4-97
Activating rear displays 4-101
Operations on rear displays 4-102
Settings and information 4-103
Controlling the rear system on the front display 4-105
Operating tips 4-106
Care and maintenance 4-107
Audio settings 4-107
Disc/USB memory device care and cleaning 4-111
Gracenote® end user license agreement 4-111
Car phone or CB radio 4-112
Bluetooth® Hands-Free Phone System 4-113
Regulatory information 4-115
Phone 4-116
Hands-free text messaging assistant 4-119
Phone and text message settings 4-123
Bluetooth® information 4-128

NissanConnect℠ Apps 4-129
NissanConnect℠ Apps overview 4-129
Using applications 4-129
NissanConnect Vehicle Apps 4-129
Voice Recognition System 4-136
Using Voice Recognition system 4-136
Before starting 4-136
Giving voice commands 4-136
Voice recognition settings 4-146
Troubleshooting guide 4-146
Customer assistance 4-146
System unit 4-147
Audio system 4-148
Bluetooth® hands-free phone system. 4-154
Voice Recognition 4-157
Additional system information 4-159
Additional help 4-160

WARNING

- **Do not adjust the heater and the air conditioner controls or audio controls while driving so that full attention may be given to vehicle operation.**
- **Do not use this system if you notice any abnormality, such as a frozen screen or lack of sound. Continued use of the system may result in accident, fire or electric shock.**
- **If you notice any foreign objects entering the system hardware, spilled liquid on the system, or notice smoke or fumes coming out from the system, or any other unusual operation is observed, stop using the system immediately. It is recommended that you visit a NISSAN dealer for service. Ignoring such conditions may lead to an accident, fire or electric shock.**
- **Do not disassemble or modify this system. If you do, it may lead to an accident, fire, or electric shock.**
- **Park the vehicle in a safe location and apply the parking brake to view the images on the front center display screen.**

CAUTION

Do not use the system when the engine is not running for extended periods of time to prevent battery discharge.

The system starts when the ignition switch is placed in the ACC or ON position.

START-UP WARNING (models with navigation system)

For this system, when the ignition switch is placed in the ACC or ON position, the start-up screen is displayed.

Touch the “OK” key after reading and agreeing to the message, if you do not agree to the message, some the navigation system and some other functions will be disabled.

NOTE:

- **Do not keep the NissanConnect system turned on with the engine stopped. Doing so may discharge the vehicle battery. When you use NissanConnect, always keep the engine running.**

CENTER MULTI-FUNCTION CONTROL PANEL

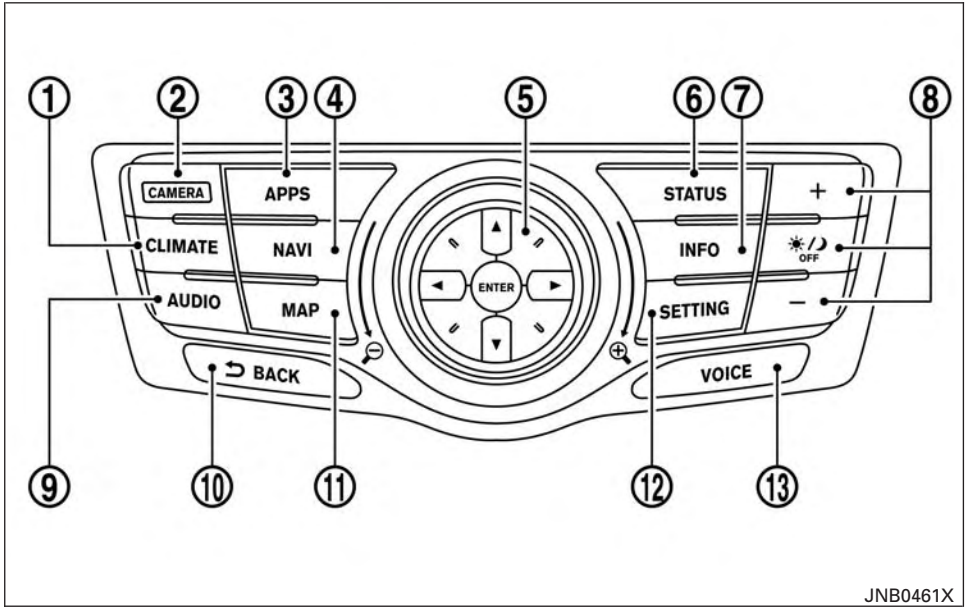

Models with navigations system

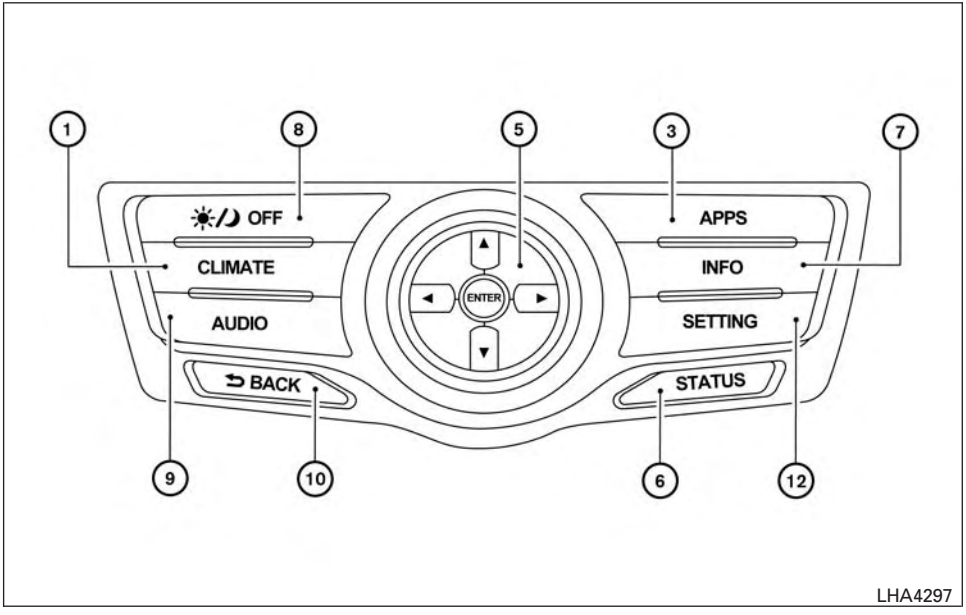

Models without navigation system

CONTROL PANEL

① **CLIMATE** button

For additional information, refer to “Heater and air conditioner” in this section.

② **CAMERA** button (models with Around View® Monitor)

Push to display Around View® Monitor.

For additional information, refer to “Around View® Monitor” in this section.

Push and hold the CAMERA button to turn the display on and off.

button (models without Around View® Monitor):
For additional information, refer to “Bluetooth® hands-free phone system” in this section.

③ **APPS** button

For additional information, refer to “Nissan-Connect^{SM} Apps” in this section.

④ **NAVI** button

For additional information, refer to the Navigation System Owner’s Manual.

⑤ Multi-function controller

Push to select an item on the screen, select the highlighted item, or scroll the map on the screen.

For additional information, refer to “Multi-function controller” in this section.

⑥ **STATUS** button

Push to display the current setting of the vehicle information, air conditioner, audio and navigation route information.

⑦ **INFO** button

Push to display the information menu. For additional information, refer to “Information screen” in this section.

⑧ ☀/OFF /☀/☽ **OFF** button, **+** / **–** buttons

Push the ☀/OFF / ☀/☽ OFF button to switch the display brightness to the daytime mode or the nighttime mode, and to adjust the display brightness level using the multi-function controller while the indicator is displayed at the bottom of the screen. Push and hold the ☀/OFF / ☀/☽ OFF button to turn the display on and off.

The display brightness can also be adjusted using the **+** button or **-** button.

⑨ **AUDIO** button

Push to operate the audio system.

For additional information, refer to “Audio main operation” in this section.

⑩ ↩ **BACK** button

Push to return to the previous screen. In a settings screen, this button is also used to apply the setting.

⑪ **MAP** button

For additional information, refer to the Navigation System Owner’s Manual.

⑫ **SETTING** button

Push to access the system settings.

⑬ **VOICE** button

For additional information, refer to the Navigation System Owner’s Manual.

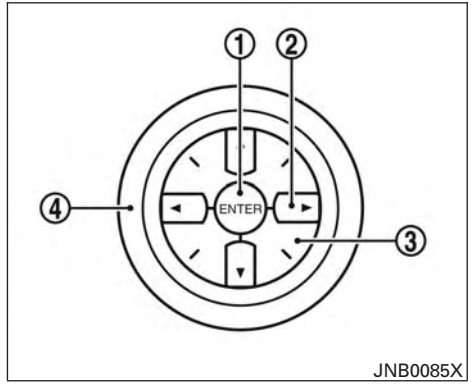

MULTI-FUNCTION CONTROLLER

① **ENTER** button

Push to select the highlighted item on the screen.

② Main directional buttons

Use to select an item on the screen or adjust a setting (volume, brightness, etc.).

③ Additional directional buttons (models with navigation system)

Use to select an item on the character input screen.

④ Center dial

Turn to highlight an item on the screen or adjust a setting.

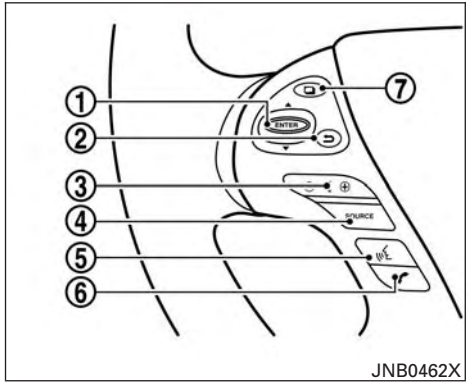

STEERING WHEEL SWITCH

① **ENTER** button

Tilt to highlight an item on the screen or adjust a setting. Push to select the highlighted item.

② button

Push this switch to go back to the previous screen or cancel the selection if it is not completed.

NOTE:

You are unable to operate the display of NissanConnect℠ using the buttons on the steering wheel switch whenever the meter shows the setting display.

③ **+** **-** button

Use to adjust the volume. These buttons have the same function as that of the VOL button on the audio system.

For additional information, refer to “Steering wheel switch for audio control” in this section.

④ **SOURCE** button

Use to switch the audio mode (source).

For additional information, refer to “Steering wheel switch for audio control” in this section.

⑤ (TALK) button

Push to start a voice recognition session. During a voice recognition session, pushing this button cancels the voice guidance and you can speak a voice command immediately.

Push and hold this button to end a voice recognition session.

⑥ button

Push to display the phone mode screen.

For additional information, refer to “Bluetooth® hands-free phone system” in this section.

⑦ button

This button is used for the vehicle information display operation.

For additional information, refer to “Vehicle information display” in the ″Instruments and controls″ section of this manual.

TOUCH PANEL OPERATION

This system is mainly operated with the touch panel screen.

CAUTION

- **The glass screen on the display screen may break if it is hit with a hard or sharp object. If the glass screen breaks, do not touch it. Doing so could result in an injury.**
- **To clean the display, use a soft, dry cloth. If additional cleaning is necessary, use a small amount of neutral detergent with a soft cloth. Never use a rough cloth, alcohol, benzine, thinner or any kind of solvent or paper towel with a chemical cleaning agent. They will scratch or deteriorate the panel.**
- **Do not splash any liquid such as water or car fragrance on the display. Contact with liquid will cause the system to malfunction.**

WARNING

- **ALWAYS give your full attention to driving.**
- **Avoid using vehicle features that could distract you. If distracted, you could lose control of your vehicle and cause an accident.**

Screen illustrations

- The illustrations in this manual are representatives of various models and may not be identical with the design and specifications of your vehicle.
- Icons and menu items displayed on the screen may be abbreviated or omitted from the screen illustrations when appropriate. The omitted icons and menu items are described as dotted lines as illustrated.

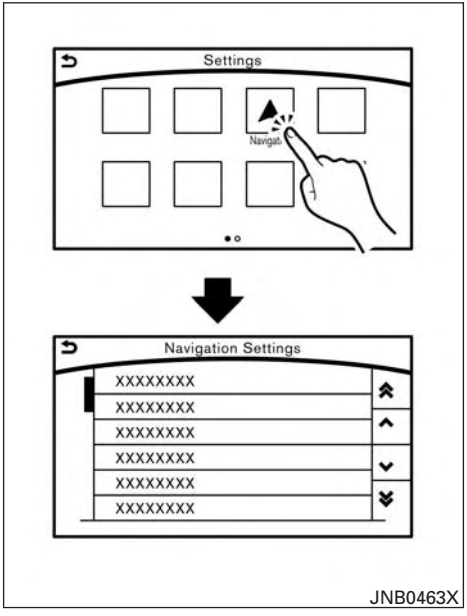

- **Touch**

Select and execute the selected key on the screen.

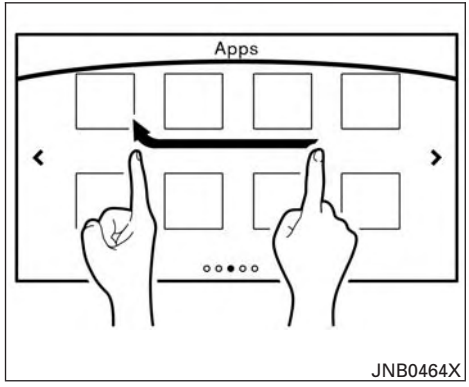

- **Swipe**

Menu screen pages will skip to the next page.

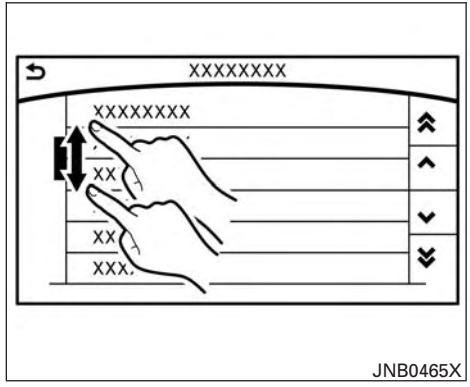

- **Drag**

Drag scroll bar up or down to scroll the menu screen.

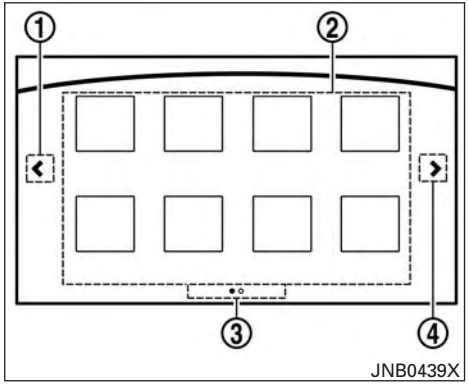

OPERATING MENU SCREENS

① Touch the "<" key to scroll to the previous page.

② Touch the preferred icon to execute a function and display the next screen.

③ Indicates the position of the currently displayed page out of the total number of available pages.

④ Touch the ">" key to scroll to the next page.

A swipe gesture can also be used to move quickly between pages.

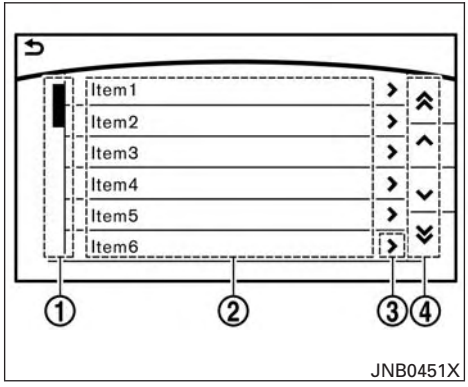

SCROLLING LIST OR MESSAGE

① Drag the scroll bar up or down to scroll the message or list up or down.

② Touch the preferred item.

③ If a listed item name is not completely displayed (due to length), touch the ">" key to display the hidden part of the name.

④ Touch the " ∧ " key or the " ∨ " key to scroll the message or list one item at a time.

Touch the " ⌃⌃ " key or the " ⌄⌄ " key to skip to the next page.

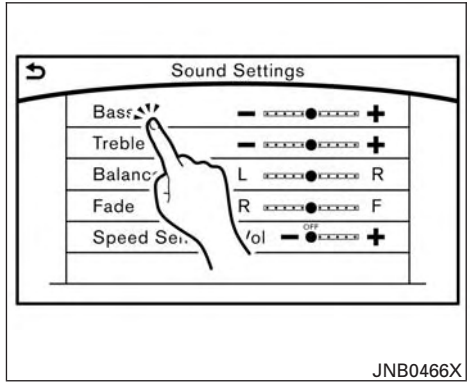

SELECTING ITEM

When an item is touched, it is executed and the next screen is displayed.

Touch the " ⮌ " key to return to the previous screen.

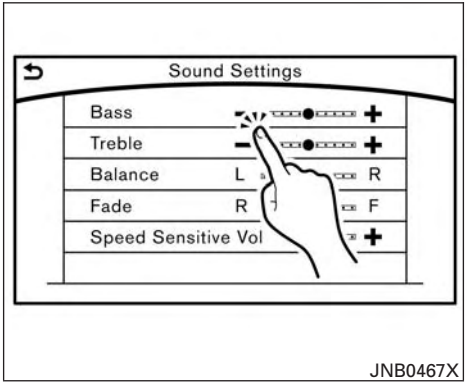

ADJUSTING SETTINGS

Level of volume, brightness, etc. can be adjusted.

Touch the adjustment keys, such as the "**+/-**" keys or the "**L/R**" keys, etc., to adjust each item. Each time a key is touched, the indicator moves along the bar.

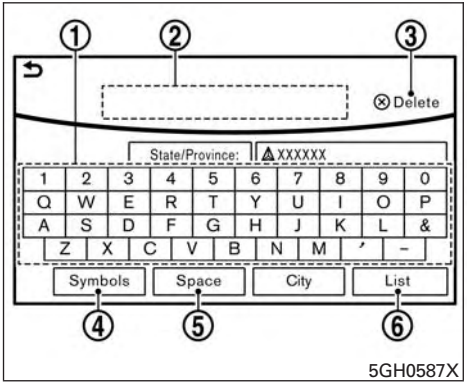

CHARACTER (letters and numbers) INPUT SCREEN

Alphanumeric characters are entered using the keyboard screen.

① Touch a character on the displayed keyboard. The selected character is entered.

② Entered characters are displayed here.

③ Touch the "Delete" key to delete the last character entered.

Touch and hold the "Delete" key to delete all the characters entered.

④ The symbol keys are displayed by touching the "Symbols" key. The alphabet keys are displayed by touching the "A-Z" keys.

⑤ Touch the "Space" key to enter a space.

⑥ Touch the "OK" key or "List" key to finalize your input.

INFO:

- Touch the "CAPS" key to toggle uppercase and lowercase characters on the keyboard screen.
- Touch the "◀" key or the "▶" key to move the character input position.

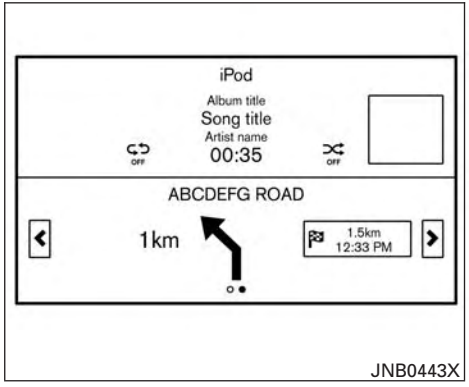

SYSTEM STATUS SCREEN

By pushing the STATUS button, the current status of the system can be displayed.

INFO:

There are different status screens displayed depending on various factors, such as the currently active mode, whether a destination has been set or not, etc.

When a route to the destination is set and the audio system is on, a screen similar to the one above appears.

Touching the "**<**/**>**" keys can switch the display among fuel economy information, navigation route information (if so equipped) and air conditioner status.

When no route is set, a compass and the direction of travel is displayed instead of the route information.

INFORMATION SCREEN

The information screen sets or displays various information that is helpful for using the vehicle. Available items include the vehicle information, traffic information, current location information and navigation software version.

Push the INFO button to display the information menu.

The displayed items vary depending on the vehicle model.

Menu item		Result
Fuel Economy		Displays the Fuel Economy screen. The current and average fuel economy and the distance to empty (Range key) can be confirmed.
	History	The Fuel Economy history screen can be scrolled. Displays the Fuel Economy history screen. Touch the **<**/**>**keys to display an older history or the newest history.
	Reset	Resets the average Fuel Economy. The average for the Reset-to-Reset period is stored as a fuel economy history. When reset average Fuel Economy is on the screen, the average fuel consumption on the trip computer is also reset at the same time.
Eco Drive Report		Displays the Eco Drive Report for Start/Cruise/Deceleration.
	History	The Eco Drive Report History screen can be scrolled. Displays the Eco Drive Report History screen. Touch the **<**/**>** keys to display an older history or the newest history.
	Reset	Resets the Eco Drive Report screen. The average for the Reset-to-Reset period is stored as an Eco Drive Report history.
Traffic Information		Allows traffic information setup. For additional information, refer to the Navigation System Owner's Manual.
Map Information		Displays the map version, software version and Navi ID.
NissanConnect Services		Displays the NissanConnect^{SM} Services menu. For additional information, refer to the Navigation System Owner's Manual.
SXM Info		Displays the SiriusXM Travel Link Information menu. For additional information, refer to the Navigation System Owner's Manual.

INFO:

- A SiriusXM Travel Link or SiriusXM Traffic subscription is necessary to receive SiriusXM information services.
- Use of NissanConnect℠Services features is dependent upon a valid subscription and the telematics device being in operative condition, as well as cellular connectivity, navigation map data and GPS satellite signal reception being available.

SETTINGS SCREEN

The system can be customized to make it easier for you to use.

The displayed items vary depending on the equipped options.

The order of the displayed items can be sorted.

Step	Menu Item		Result
Push the **SETTING** button.	Bluetooth		Sets the Bluetooth® Audio and Phone. For additional information, refer to “Bluetooth® settings” in this section.
	Phone/Mail		Displays the Phone/Mail setting screen. For additional information, refer to “Phone and text message settings” in this section.
	Navigation		Displays the Navigation setting screen. For additional information, refer to the Navigation System Owner’s Manual.
	Audio		Displays the Audio setting screen. For additional information, refer to “Audio settings” in this section.
	Screen		Sets the Screen display to the preferred settings. For additional information, refer to “Screen settings” in this section.
	Volume Adjustment		Sets the Volume Adjustment. For additional information, refer to “Volume settings” in this section.
	Clock		Sets the Clock to your preferred settings. For additional information, refer to “Clock settings” in this section.
	NissanConnect Services		Sets NissanConnect℠ Services to your preferred settings. For additional information, refer to the Navigation System Owner’s Manual.
	Voice Recognition		Sets Minimize Voice Feedback to on/off and the audio setting for voice recognition use.
	Camera/Sonar		Sets the Camera/Sonar to your preferred settings. For additional information, refer to “Sonar function settings” in this section.
	Other	Language	Sets the language to your preferred settings. For additional information, refer to “Language setting” in this section.
		Keyboard Type	Sets the Keyboard Type to ABC key or QWERTY key.
		Low on Fuel Alert	Sets the fuel low notification to on/off.
		Software Information	Displays the Software Information.

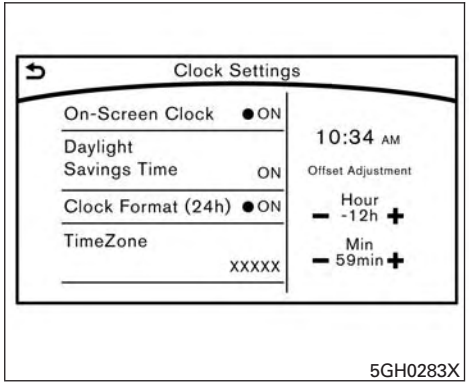

Clock Settings

This changes the clock settings.

Step	Menu item	Action
1. Push the **SETTING** button. 2. Touch Clock.	On-Screen Clock	Sets the clock display on/off. When this item is on, the clock display appears.
	Daylight Savings Time	Toggles the setting for daylight saving time between ON or OFF.
	Clock Format (24h)	Toggles the clock format between 12–hour and 24–hour times. When the indicator light illuminates, the clock is set to the 24–hour format.
	Time Zone	Selects an appropriate time zone from the list. When selecting AUTO, the system selects the time zone automatically.
	Offset Adjustment	Adjusts the offset value (hour and minutes).

Language Setting

This changes the display language used in the system.

Step	Setting item	Action
1. Push the **SETTING** button. 2. Touch Other. 3. Touch Language.	System Language	Selects the language of the display.

INFO:

- Do not push the ignition switch while changing the language.
- If the selected language is also supported in the vehicle information display, a confirmation message asking if you would like to also change how the meter language is displayed. Select the “Yes” key to change the language in the meter.

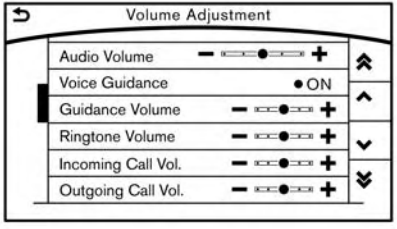

5GG0052X

Volume Settings

This turns on and off, as well as adjusts, the volume for various functions including audio, phone (ringer, incoming, and outgoing volumes), navigation voice guidance, and system beeps.

Step	Setting item	Action
1. Push the **SETTING** button 2. Touch Volume Adjustment	Audio Volume	Adjusts the volume of the audio system.
	Voice Guidance	Toggles the voice guidance on and off.
	Guidance Volume	Adjusts the volume level of guidance volume .
	Ringtone Volume	Adjusts the volume level of the ringtone.
	Incoming Call Vol.	Adjusts the incoming call volume.
	Outgoing Call Vol.	Adjusts the outgoing call volume.
	NissanConnect Svcs. Vol.	Adjusts the volume level of the NissanConnect℠ Services information channel.
	Sonar Volume	Adjusts the volume level of the sonar warning volume.
	Button Beep sound	Toggles the button beep sound and alarm for a prohibited operation to on and off.

Screen Settings

This menu turns the display on and off and adjusts the image quality of the display.

Step	Setting item		Action
1. Push the **SETTING** button. 2. Touch-Screen.	Display Settings	Brightness	Adjusts the brightness.
		Contrast	Adjusts the contrast.
		Black Level	Adjusts the black level.
	Display OFF		Turns the screen on or off. Push and hold the **CAMERA** or ☀/☾ button for more than 2 seconds to turn the display on.
	Day/Night		Adjusts the display brightness. Toggle the map color between the day screen and the night screen.
	Change Map Color		Toggle the map color between the day screen and the night screen.
	Reset Settings		This restores the display settings to the default settings.

REARVIEW MONITOR (if so equipped)

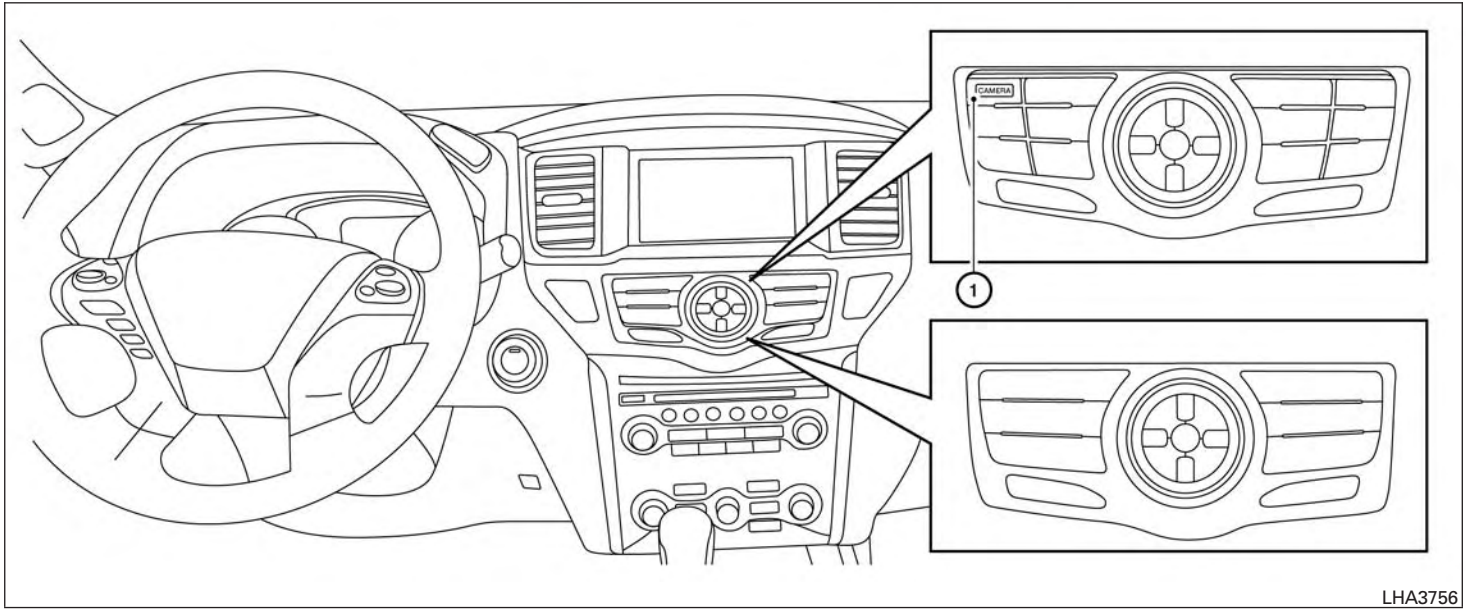

LHA3756

1. CAMERA button (if so equipped)

⚠ WARNING

- **Failure to follow the warnings and instructions for proper use of the RearView Monitor system could result in serious injury or death.**

- **RearView Monitor is a convenience feature and is not a substitute for proper backing. Always turn and look out the windows and check mirrors to be sure that it is safe to move before operating the vehicle. Always back up slowly.**

- **The system is designed as an aid to the driver in showing large stationary objects directly behind the vehicle, to help avoid damaging the vehicle.**
- **The distance guide line and the vehicle width line should be used as a reference only when the vehicle is on a level paved surface. The distance viewed on the monitor is for reference only and may be different than the actual distance between the vehicle and displayed objects.**

⚠CAUTION

Do not scratch the camera lens when cleaning dirt or snow from the front of the camera.

The RearView Monitor system automatically shows a rear view of the vehicle when the shift lever is shifted into the R (Reverse) position or when the CAMERA button (if so equipped) is pressed. The radio can still be heard while the RearView Monitor is active.

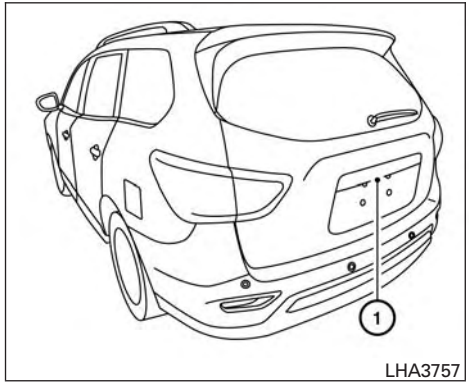

LHA3757

To display the rear view, the RearView Monitor system uses a camera located just above the vehicle's license plate ①.

REARVIEW MONITOR SYSTEM OPERATION

With the ignition switch in the ON position, move the shift lever to the R (Reverse) position or press the CAMERA button to operate the RearView Monitor.

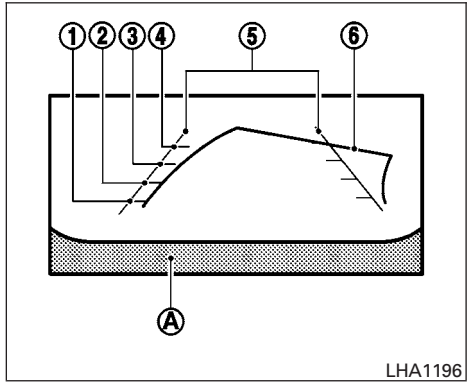

LHA1196

HOW TO READ THE DISPLAYED LINES

Guiding lines which indicate the vehicle width and distances to objects with reference to the vehicle body line Ⓐ are displayed on the monitor.

Distance guide lines

Indicate distances from the vehicle body.

- Red line ①: approx. 1.5 ft (0.5 m)
- Yellow line ②: approx. 3 ft (1 m)
- Green line ③: approx. 7 ft (2 m)
- Green line ④: approx. 10 ft (3 m)

Vehicle width guide lines ⑤

Indicate the vehicle width when backing up.

Predicted course lines ⑥

Indicate the predicted course when backing up. The predicted course lines will be displayed on the monitor when the shift lever is in the R (Reverse) position and the steering wheel is turned. The predicted course lines will move depending on how much the steering wheel is turned and will not be displayed while the steering wheel is in the straight-ahead position.

The vehicle width guide lines and the width of the predicted course lines are wider than the actual width and course.

DIFFERENCE BETWEEN PREDICTED AND ACTUAL DISTANCES

The displayed guidelines and their locations on the ground are for approximate reference only. Objects on uphill or downhill surfaces or projecting objects will be actually located at distances different from those displayed in the monitor relative to the guidelines (refer to illustrations). When in doubt, turn around and view the objects as you are backing up, or park and exit the vehicle to view the positioning of objects behind the vehicle.

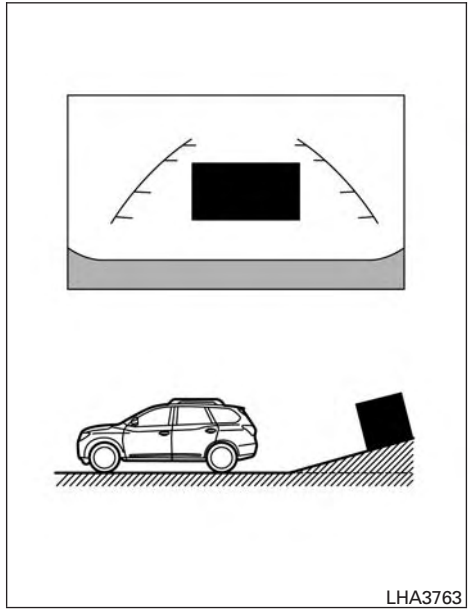

Backing up on a steep uphill

When backing up the vehicle up a hill, the distance guide lines and the vehicle width guide lines are shown closer than the actual distance. Note that any object on the hill is further than it appears on the monitor.

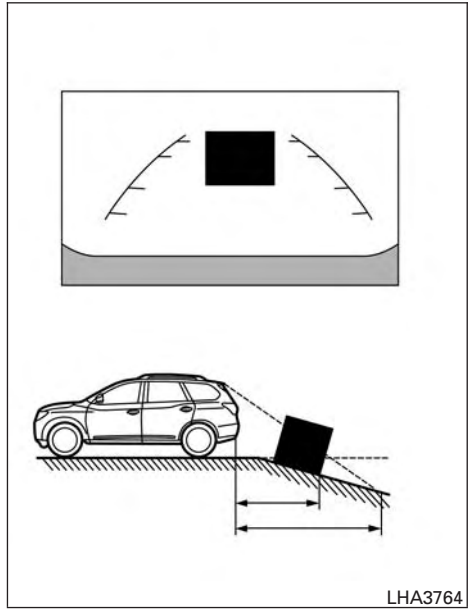

Backing up on a steep downhill

When backing up the vehicle down a hill, the distance guide lines and the vehicle width guide lines are shown farther than the actual distance. Note that any object on the hill is closer than it appears on the monitor.

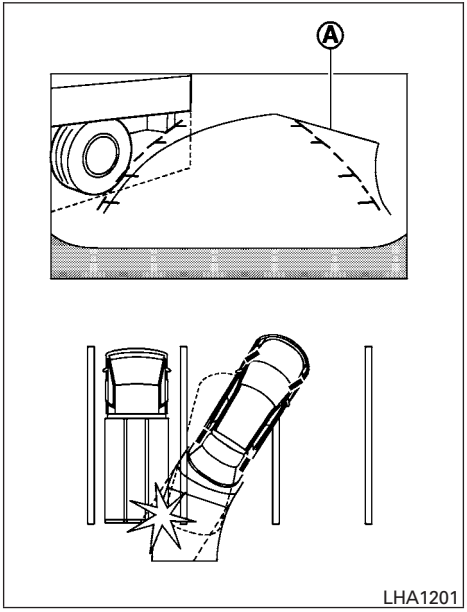

Backing up near a projecting object

The predicted course lines Ⓐ do not touch the object in the display. However, the vehicle may hit the object if it projects over the actual backing up course.

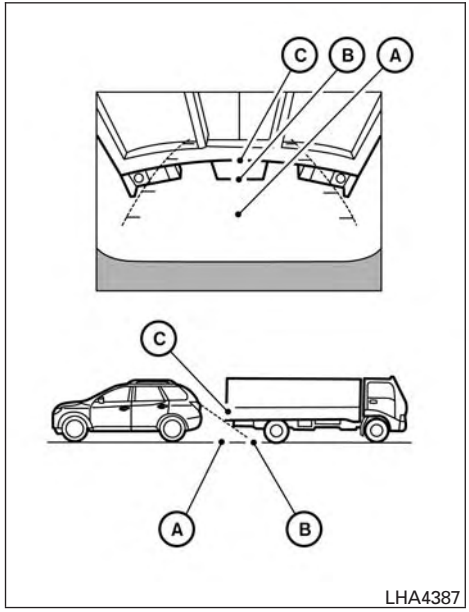

Backing up behind a projecting object

The position Ⓒ is shown farther than the position Ⓑ in the display. However, the position Ⓒ is actually at the same distance as the position Ⓐ. The vehicle may hit the object when backing up to the position Ⓐ if the object projects over the actual backing up course.

HOW TO PARK WITH PREDICTED COURSE LINES

⚠ WARNING

- **If the tires are replaced with different sized tires, the predicted course lines may be displayed incorrectly.**
- **On a snow-covered or slippery road, there may be a difference between the predicted course line and the actual course line.**
- **If the battery is disconnected or becomes discharged, the predicted course lines may be displayed incorrectly. If this occurs, please perform the following procedures:**
  - **Turn the steering wheel from lock to lock while the engine is running.**
  - **Drive the vehicle on a straight road for more than 5 minutes.**
- **When the steering wheel is turned with the ignition switch in the ACC position, the predicted course lines may be displayed incorrectly.**

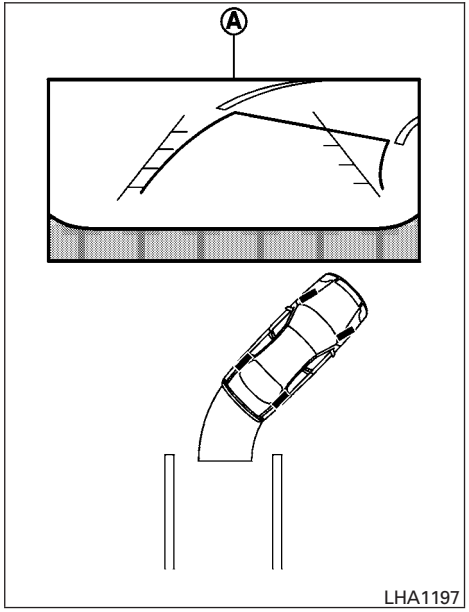

1. Visually check that the parking space is safe before parking your vehicle.
2. The rear view of the vehicle is displayed on the screen Ⓐ when the shift lever is moved to the R (Reverse) position.

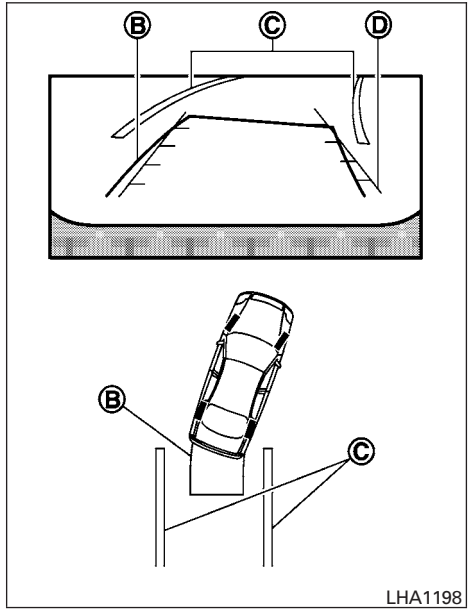

3. Slowly back up the vehicle adjusting the steering wheel so that the predicted course lines Ⓑ enter the parking space Ⓒ.
4. Maneuver the steering wheel to make the vehicle width guide lines Ⓓ parallel to the parking space Ⓒ while referring to the predicted course lines.
5. When the vehicle is parked in the space completely, move the shift lever to the P (Park) position and apply the parking brake.

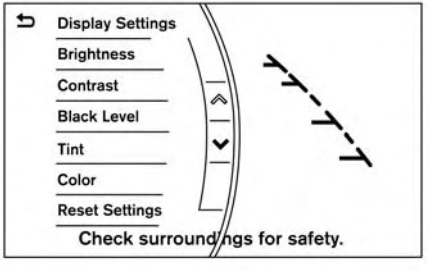

LHA4243

ADJUSTING THE SCREEN

To adjust the Display ON/OFF, Brightness, Tint, Color, Contrast and Black Level of the RearView Monitor, press the SETTING button with the RearView Monitor on, touch the Camera or Camera/Sonar key and then select the "Display" key. Select one of the items and change the value by touching the "+" or "-" key or by turning the multi-function controller.

NOTE:

Do not adjust the Brightness, Tint, Color, Contrast and Black Level of the RearView Monitor while the vehicle is moving. Make sure the parking brake is firmly applied.

HOW TO TURN ON AND OFF PREDICTED COURSE LINES

To toggle on and off the predicted course lines while in the P (Park) position:

1. Press the SETTING button.
2. Touch the Camera or Camera/Sonar key.
3. Touch the Camera key.
4. Touch the Predicted Course Lines key to turn the feature on or off.

REARVIEW MONITOR SYSTEM LIMITATIONS

⚠ WARNING

Listed below are the system limitations for RearView Monitor. Failure to operate the vehicle in accordance with these system limitations could result in serious injury or death.

- **The system cannot completely eliminate blind spots and may not show every object.**
- **Underneath the bumper and the corner areas of the bumper cannot be viewed on the RearView Monitor because of its monitoring range limitation. The system will not show small objects below the bumper, and may not show objects close to the bumper or on the ground.**
- **Objects viewed in the RearView Monitor differ from actual distance because a wide-angle lens is used.**
- **Objects in the RearView Monitor will appear visually opposite compared to when viewed in the rearview and outside mirrors.**
- **Use the displayed lines as a reference. The lines are highly affected by the number of occupants, fuel level, vehicle position, road conditions and road grade.**
- **Make sure that the liftgate is securely closed when backing up.**
- **Do not put anything on the rearview camera. The rearview camera is installed above the license plate.**

- **When washing the vehicle with high pressure water, be sure not to spray it around the camera. Otherwise, water may enter the camera unit causing water condensation on the lens, a malfunction, fire or an electric shock.**
- **Do not strike the camera. It is a precision instrument. Otherwise, it may malfunction or cause damage resulting in a fire or an electric shock.**

The following are operating limitations and do not represent a system malfunction:

- When the temperature is extremely high or low, the screen may not clearly display objects.
- When strong light directly shines on the camera, objects may not be displayed clearly.
- Vertical lines may be seen in objects on the screen. This is due to strong reflected light from the bumper.
- The screen may flicker under fluorescent light.
- The colors of objects on the RearView Monitor may differ somewhat from the actual color of objects.
- Objects on the monitor may not be clear in a dark environment.
- There may be a delay when switching between views.
- If dirt, rain or snow accumulate on the camera, the RearView Monitor may not display objects clearly. Clean the camera.
- Do not use wax on the camera lens. Wipe off any wax with a clean cloth dampened with a diluted mild cleaning agent, then wipe with a dry cloth.

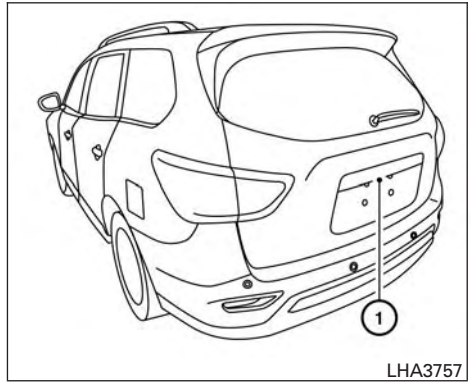

LHA3757

SYSTEM MAINTENANCE

⚠ CAUTION

- **Do not use alcohol, benzine or thinner to clean the camera. This will cause discoloration.**
- **Do not damage the camera as the monitor screen may be adversely affected.**

If dirt, rain or snow accumulates on the camera ①, the RearView Monitor may not display objects clearly. Clean the camera by wiping it with a cloth dampened with a diluted mild cleaning agent and then wiping it with a dry cloth.

AROUND VIEW® MONITOR (if so equipped)

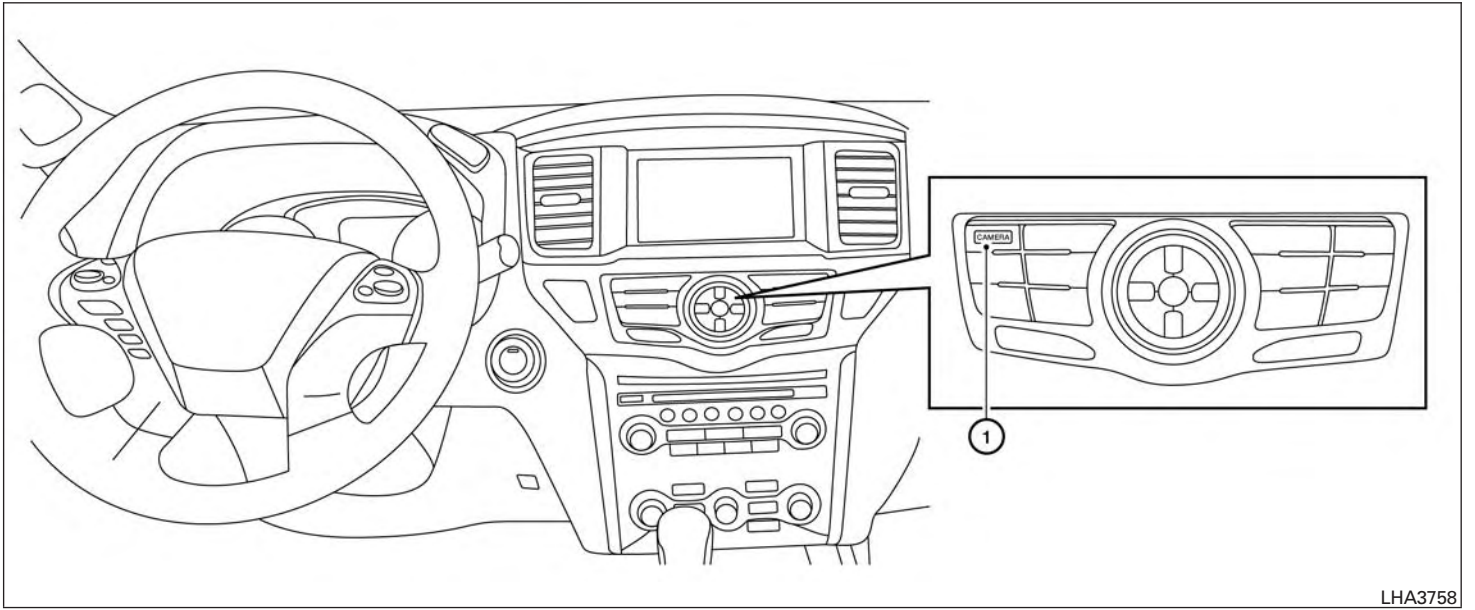

1. CAMERA button

⚠ WARNING

- **Failure to follow the warnings and instructions for the proper use of the Around View® Monitor system could result in serious injury or death.**
- **The Around View® Monitor is a convenience feature and is not a substitute for proper vehicle operation because it has areas where objects cannot be viewed. The four corners of the vehicle in particular, are areas where objects do not always appear in the bird's-eye, front, or rear views. Always check your surroundings to be sure that it is safe to move before operating the vehicle. Always operate the vehicle slowly.**
- **The driver is always responsible for safety during parking and other maneuvers.**

⚠ CAUTION

Do not scratch the camera lens when cleaning dirt or snow from the front of the camera.

The Around View® Monitor system is designed as an aid to the driver in situations such as slot parking or parallel parking.

The monitor displays various views of the position of the vehicle in a split screen format. Not all views are available at all times.

Available views:

- Front View
  An approximately 150–degree view of the front of the vehicle.
- Rear View
  An approximately 150–degree view of the rear of the vehicle.
- Bird's-Eye View
  The surrounding views of the vehicle from above.
- Front-Side View
  The view around and ahead of the front passenger's side wheel.

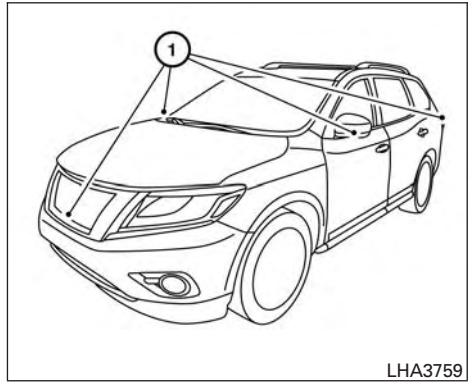

LHA3759

To display the multiple views, the Around View® Monitor system uses cameras located in the front grille, on the vehicle's outside mirrors and one just above the vehicle's license plate ①.

AROUND VIEW® MONITOR SYSTEM OPERATION

With the ignition switch in the ON position, move the shift lever to the R (Reverse) position or press the CAMERA button to operate the Around View® Monitor.

When the camera is first activated with the bird's-eye view in the display, a red icon (if so equipped) will flash on the screen. This indicates that the sonar system is activated. For additional informa-

tion on the rear sonar system, refer to “Rear Sonar System (RSS)” in the “Starting and driving” section of this manual.

The screen displayed on the Around View® Monitor will automatically return to the previous screen 3 minutes after the CAMERA button has been pressed with the shift lever in a position other than the R (Reverse) position.

Available views

⚠ WARNING

- **The distance guide lines and the vehicle width lines should be used as a reference only when the vehicle is on a paved, level surface. The apparent distance viewed on the monitor may be different than the actual distance between the vehicle and displayed objects.**
- **Use the displayed lines and the bird’s-eye view as a reference. The lines and the bird’s-eye view are greatly affected by the number of occupants, cargo, fuel level, vehicle position, road condition and road grade.**
- **If the tires are replaced with different sized tires, the predicted course lines and the bird’s-eye view may be displayed incorrectly.**
- **When driving the vehicle up a hill, objects viewed in the monitor are further than they appear. When driving the vehicle down a hill, objects viewed in the monitor are closer than they appear.**
- **Objects in the rear view will appear visually opposite compared to when viewed in the monitor and outside mirrors.**
- **Use the mirrors or actually look to properly judge distances to other objects.**
- **On a snow-covered or slippery road, there may be a difference between the predicted course lines and the actual course line.**
- **The vehicle width and predicted course lines are wider than the actual width and course.**
- **The displayed lines will appear slightly off to the right, because the rearview camera is not installed in the rear center of the vehicle.**

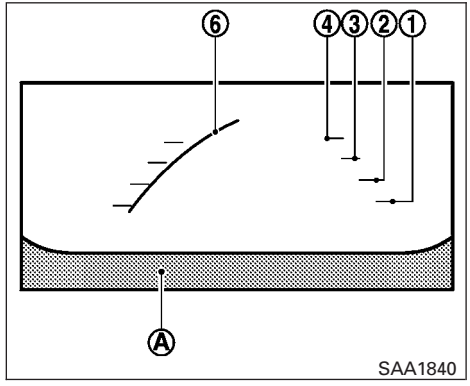

Front view

Front and rear view

Guiding lines that indicate the approximate vehicle width and distance to objects with reference to the vehicle body line Ⓐ are displayed on the monitor.

Distance guide lines

Indicate distances from the vehicle body:

- Red line ①: approximately 1.5 ft (0.5 m)
- Yellow line ②: approximately 3 ft (1 m)
- Green line ③: approximately 7 ft (2 m)
- Green line ④: approximately 10 ft (3 m)

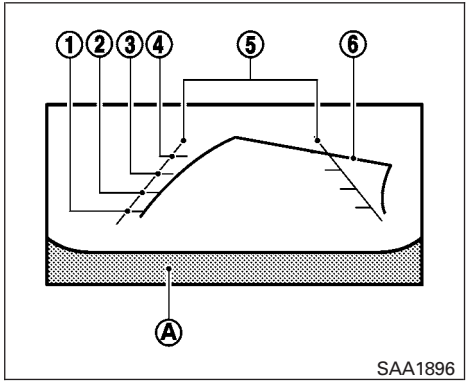

Rear view

Vehicle width guide lines ⑤:

Indicate the approximate vehicle width when backing up.

Predicted course lines ⑥:

Indicate the predicted course when operating the vehicle. The predicted course lines will be displayed on the monitor when the steering wheel is turned. The predicted course lines will move depending on how much the steering wheel is turned and will not be displayed while the steering wheel is in the straight-ahead position.

The front view will not be displayed when the vehicle speed is above 6 mph (10 km/h).

NOTE:

When the monitor displays the front view and the steering wheel turns about 90 degrees or less from the straight-ahead position, both the right and left predicted course lines ⑥ are displayed. When the steering wheel turns about 90 degrees or more, a line is displayed only on the opposite side of the turn.

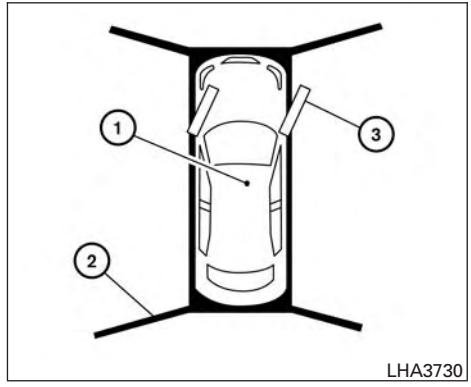

Bird's-eye view

The bird's-eye view shows the overhead view of the vehicle, which helps confirm the vehicle position and the predicted course to a parking space.

The vehicle icon ① shows the position of the vehicle. Note that the apparent distance between objects viewed in the bird's-eye view may differ somewhat from the actual distance to the vehicle.

The areas that the cameras cannot cover ② are indicated in black.

The non-viewable area ② is highlighted in yellow for several seconds after the bird's-eye view is displayed. It will be shown only the first time after the ignition switch is placed in the ON position.

The driver can check the approximate direction and angle of the tire on the display by the tire icon ③ when driving the vehicle forward or backward.

⚠ WARNING

- **Objects in the bird's-eye view will appear further than the actual distance.**
- **Tall objects, such as a curb or vehicle, may be misaligned or not displayed at the seam of the views.**
- **Objects that are above the camera cannot be displayed.**
- **The view of the bird's-eye view may be misaligned when the camera position alters.**
- **A line on the ground may be misaligned and is not seen as being straight at the seam of the views. The misalignment will increase as the line proceeds away from the vehicle.**
- **Tire angle display does not indicate the actual tire angle.**

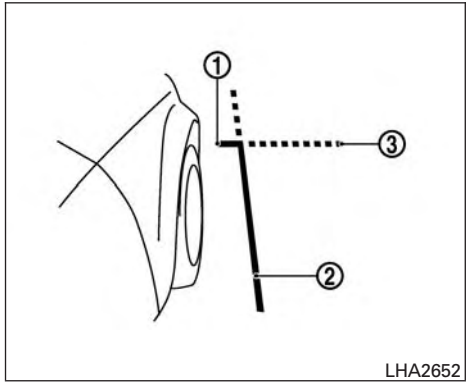

Front-side view

Guiding lines

Guiding lines that indicate the approximate width and the front end of the vehicle are displayed on the monitor.

The front-of-vehicle line ① shows the front part of the vehicle.

The side-of-vehicle line ② shows the approximate vehicle width including the outside mirrors.

The extensions ③ of both the front ① and side ② lines are shown with a green dotted line.

DIFFERENCE BETWEEN PREDICTED AND ACTUAL DISTANCES

The displayed guidelines and their locations on the ground are for approximate reference only. Objects on uphill or downhill surfaces or projecting objects will be actually located at distances different from those displayed in the monitor relative to the guidelines (refer to illustrations). When in doubt, turn around and view the objects as you are backing up, or park and exit the vehicle to view the positioning of objects behind the vehicle.

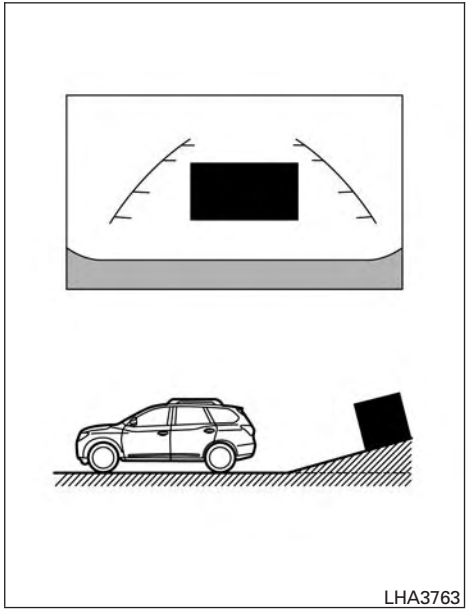

Backing up on a steep uphill

When backing up the vehicle up a hill, the distance guide lines and the vehicle width guide lines are shown closer than the actual distance. Note that any object on the hill is further than it appears on the monitor.

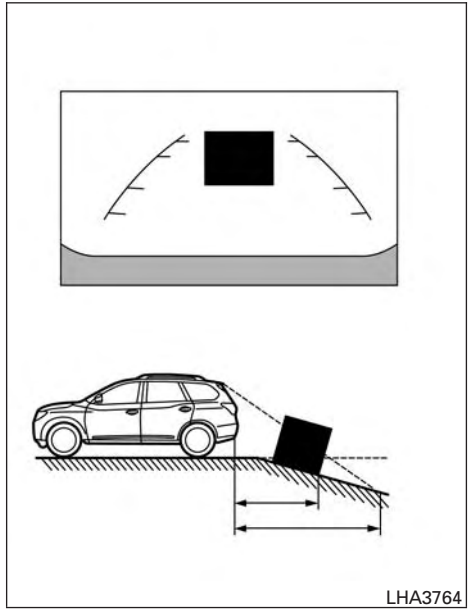

Backing up on a steep downhill

When backing up the vehicle down a hill, the distance guide lines and the vehicle width guide lines are shown farther than the actual distance. Note that any object on the hill is closer than it appears on the monitor.

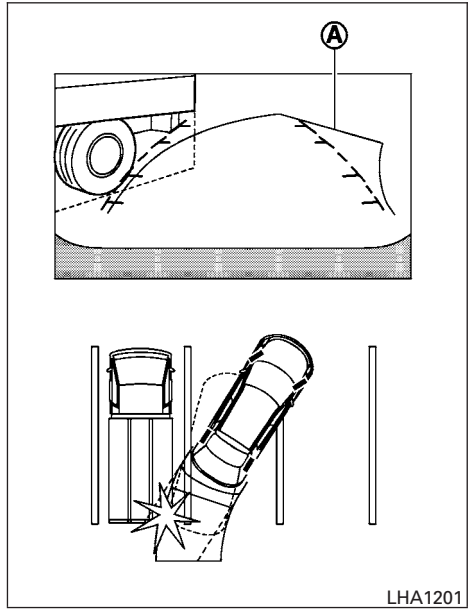

Backing up near a projecting object

The predicted course lines Ⓐ do not touch the object in the display. However, the vehicle may hit the object if it projects over the actual backing up course.

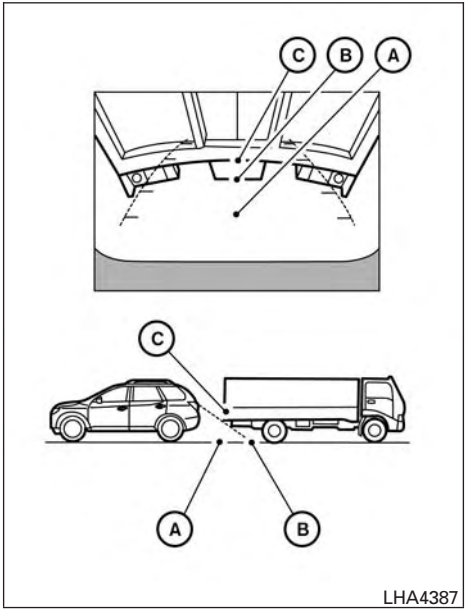

Backing up behind a projecting object

The position Ⓒ is shown farther than the position Ⓑ in the display. However, the position Ⓒ is actually at the same distance as the position Ⓐ. The vehicle may hit the object when backing up to the position Ⓐ if the object projects over the actual backing up course.

HOW TO PARK WITH PREDICTED COURSE LINES

⚠ WARNING

- **If the tires are replaced with different sized tires, the predicted course lines may be displayed incorrectly.**
- **On a snow-covered or slippery road, there may be a difference between the predicted course line and the actual course line.**
- **If the battery is disconnected or becomes discharged, the predicted course lines may be displayed incorrectly. If this occurs, please perform the following procedures:**
  - **Turn the steering wheel from lock to lock while the engine is running.**
  - **Drive the vehicle on a straight road for more than 5 minutes.**
- **When the steering wheel is turned with the ignition switch in the ACC position, the predicted course lines may be displayed incorrectly.**

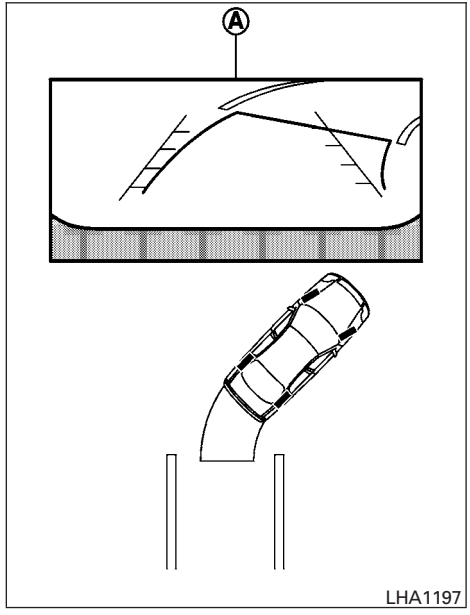

1. Visually check that the parking space is safe before parking your vehicle.
2. The rear view of the vehicle is displayed on the screen Ⓐ when the shift lever is moved to the R (Reverse) position.

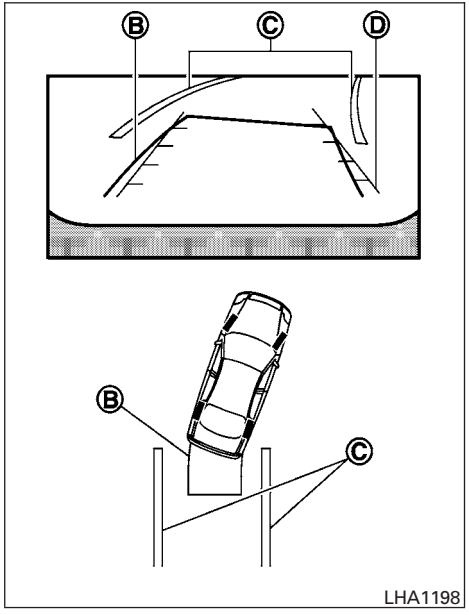

3. Slowly back up the vehicle adjusting the steering wheel so that the predicted course lines Ⓑ enter the parking space Ⓒ.
4. Maneuver the steering wheel to make the vehicle width guide lines Ⓓ parallel to the parking space Ⓒ while referring to the predicted course lines.
5. When the vehicle is parked in the space completely, move the shift lever to the P (Park) position and apply the parking brake.

HOW TO SWITCH THE DISPLAY

With the ignition switch in the ON position, press the CAMERA button or move the shift lever to the R (Reverse) position to operate the Around View® Monitor.

The Around View® Monitor displays different split screen views depending on the position of the shift lever. Press the CAMERA button to switch between the available views.

If the shift lever is in the R (Reverse) position, the available views are:

- Rear view/bird's-eye view split screen
- Rear view/front-side view split screen

If the shift lever is in the P (Park) position, the available views are:

- Front view/bird's-eye view split screen
- Front view/front-side view split screen

If the shift lever is in the D (Drive) position, the only available view is front view/front-side view split screen.

The display will switch from the Around View® Monitor screen when:

- The shift lever is in the D (Drive) position and the vehicle speed increases above approximately 6 mph (10 km/h)
- A different screen is selected.

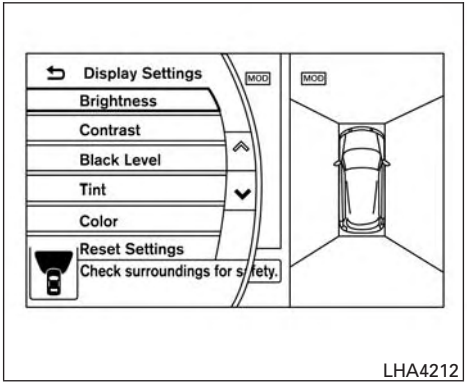

ADJUSTING THE SCREEN

To adjust the Display ON/OFF, Brightness, Tint, Color, Contrast and Black Level of the Around View® Monitor, press the SETTING button with the monitor on and select the “Display” key. Select one of the items and change the value by touching the “+” or “-” key or by turning the multi-function controller.

NOTE:

Do not adjust the Brightness, Tint, Color, Contrast and Black Level of the Around View® Monitor while the vehicle is moving. Make sure the parking brake is firmly applied.

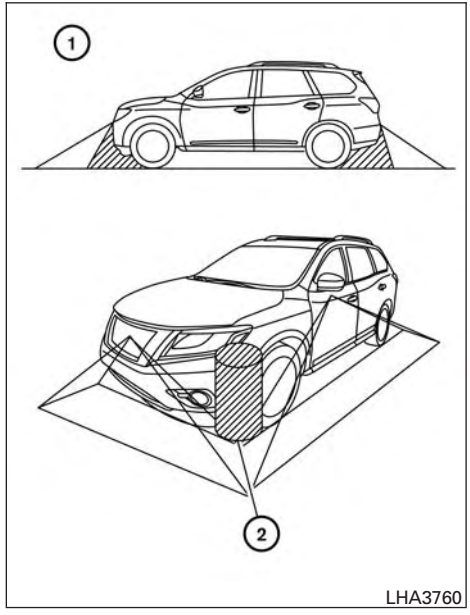

AROUND VIEW® MONITOR SYSTEM LIMITATIONS

⚠ WARNING

Listed below are the system limitations for Around View® Monitor. Failure to operate the vehicle in accordance with these system limitations could result in serious injury or death.

- **Do not use the Around View® Monitor with the outside mirrors in the stored position, and make sure that the liftgate is securely closed when operating the vehicle using the Around View® Monitor.**
- **The apparent distance between objects viewed on the Around View® Monitor differs from the actual distance.**
- **The cameras are installed on the front grille, the outside mirrors and above the rear license plate. Do not put anything on the vehicle that covers the cameras.**
- **When washing the vehicle with high pressure water, be sure not to spray it around the cameras. Otherwise, water may enter the camera unit causing water condensation on the lens, a malfunction, fire or an electric shock.**
- **Do not strike the cameras. They are precision instruments. Doing so could cause a malfunction or cause damage resulting in a fire or an electric shock.**

There are some areas where the system will not show objects and the system does not warn of moving objects. When in the front or rear view display, an object below the bumper or on the ground may not be viewed ①. When in the bird's-eye view, a tall object near the seam ② of the camera viewing areas will not appear in the monitor.

The following are operating limitations and do not represent a system malfunction:

- There may be a delay when switching between views.
- When the temperature is extremely high or low, the screen may not display objects clearly.
- When strong light directly shines on the camera, objects may not be displayed clearly.
- The screen may flicker under fluorescent light.
- The colors of objects on the Around View® Monitor may differ somewhat from the actual color of objects.
- Objects on the Around View® Monitor may not be clear and the color of the object may differ in a dark environment.
- There may be differences in sharpness between each camera view of the bird's-eye view.
- Do not use wax on the camera lens. Wipe off any wax with a clean cloth that has been dampened with a diluted mild cleaning agent, then wipe with a dry cloth.

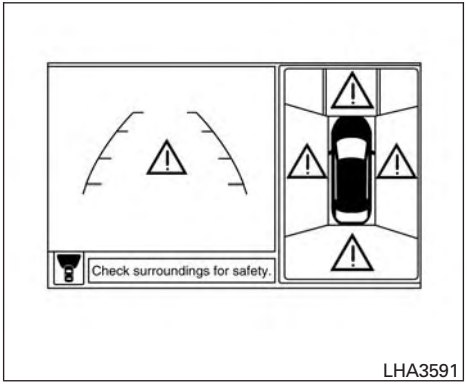

LHA3591

System temporarily unavailable

When the "!" icon is displayed on the screen, there are abnormal conditions in the Around View® Monitor. This will not hinder normal driving operation but the system should be inspected. It is recommended that you visit a NISSAN dealer for this service.

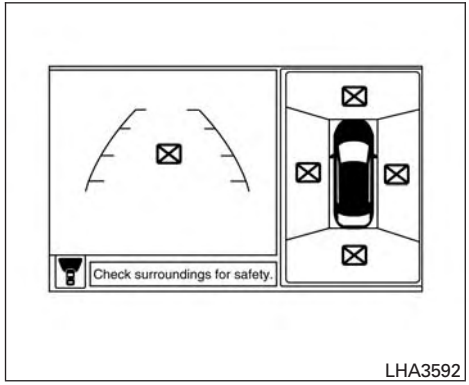

LHA3592

When the "[X]" icon is displayed on the screen, the camera image may be receiving temporary electronic disturbances from surrounding devices. This will not hinder normal driving operation but the system should be inspected if it occurs frequently. It is recommended that you visit a NISSAN dealer for this service.

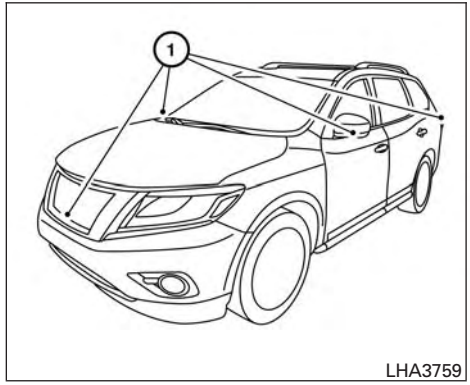

LHA3759

SYSTEM MAINTENANCE

⚠ CAUTION

- **Do not use alcohol, benzine or thinner to clean the camera. This will cause discoloration.**
- **Do not damage the cameras as the monitor screen may be adversely affected.**

If dirt, rain or snow accumulates on any of the cameras ①, the Around View® Monitor may not display objects clearly. Clean the camera by wiping with a cloth dampened with a diluted mild cleaning agent and then wiping with a dry cloth.

CAMERA AIDING SONAR (parking sensor) (if so equipped)

⚠ WARNING

Failure to follow the warnings and instructions for proper use of the sonar function as outlined in this section could result in serious injury or death.

- **The sonar is a convenience feature. It is not a substitute for proper parking.**
- **This function is designed as an aid to the driver in detecting large stationary objects to help avoid damaging the vehicle.**
- **The driver is always responsible for safety during parking and other maneuvers.**
- **Always look around and check that it is safe to move before parking.**
- **Read and understand the limitations of the sonar as contained in this section.**

The sonar function helps to inform the driver of large stationary objects around the vehicle when parking by issuing an audible and visual alert.

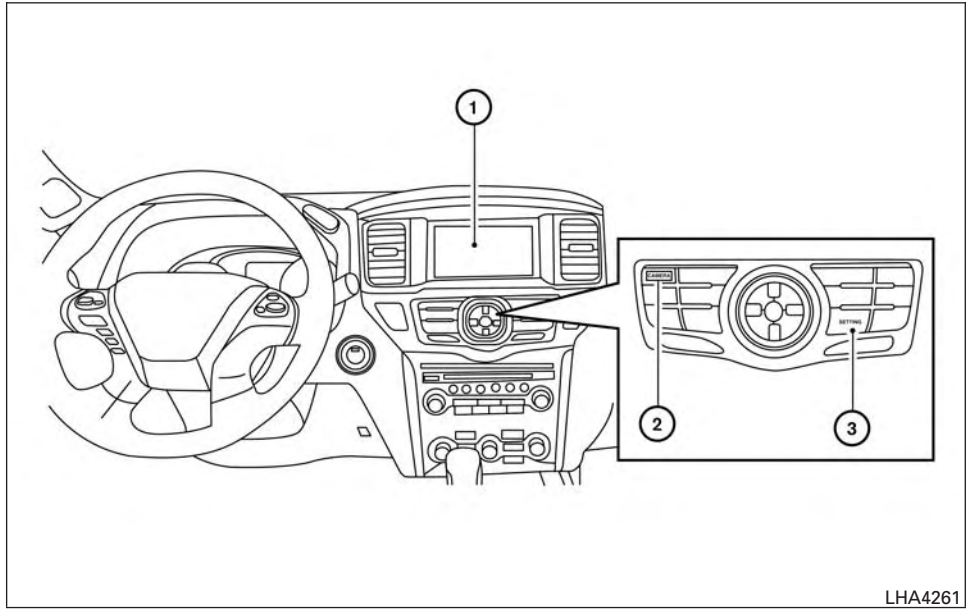

1. Center display
2. CAMERA button
3. SETTING button

SONAR SYSTEM OPERATION

The system gives the tone for rear objects when the shift lever is in the “R” (Reverse) position.

When the camera image is shown on the center display, the system shows the sonar indicator regardless of the shift lever position.

The system is deactivated at speeds above 6 mph (10 km/h). It is reactivated at lower speeds.

The colors of the sonar indicators and the distance guide lines in the front and rear views indicate different distances to the object.

When the objects are detected, the indicator (green) appears and blinks and the tone sounds intermittently. When the vehicle moves closer to the object, the color of the indicator turns yellow and the rate of the blinking and the rate of the tone increase. When the vehicle is very close to the object, the indicator stops blinking and turns red, and the tone sounds continuously.

The intermittent tone will stop after 3 seconds when an object is detected by only the corner sonar and the distance does not change.

The tone will stop when the object is no longer near the vehicle.

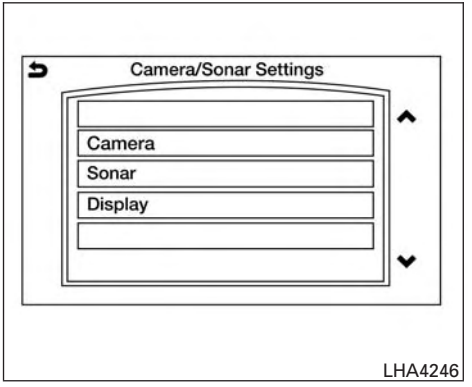

LHA4246

TURNING ON AND OFF THE SONAR FUNCTION

When the Sonar key is selected, the indicator Ⓑ will turn off and the sonar will be turned off temporarily. The Moving Object Detection (MOD) system will also be turned off at the same time. For additional information, refer to “Moving Object Detection (MOD) in this section. When the Sonar key is selected again, the indicator will turn on and the sonar will turn back on.

In the below cases, the sonar will be turned back on automatically:

- When the shift lever is placed in the “R” (Reverse) position.

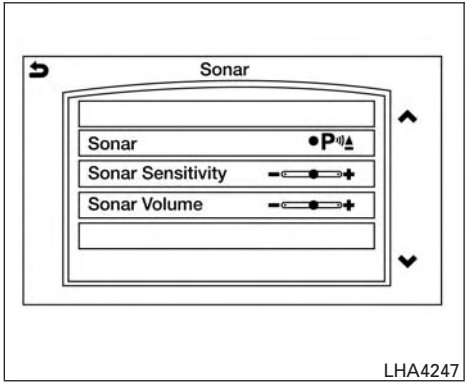

LHA4247

- When the CAMERA button is pressed and a screen other than the camera view is shown on the display.
- When vehicle speed decreases below approximately 6 mph (10 km/h).
- When the ignition switch is placed in the “OFF” position and turned back to the “ON” position again. To prevent the sonar system from activating altogether, use the “Camera” menu. For additional information, refer to “Sonar function settings” in this section.

Sonar function settings

To set up the sonar function to your preferred settings, press the SETTING button, select the "Others" key and then select the "Camera" key on the center display.

Designs and items displayed on the screen may vary depending on the models.

Sonar Volume: Adjust the volume of the buzzer.
Sonar: When this item is turned ON, the rear sonar is activated. When this item is turned OFF (indicator turns off), the rear sonar is deactivated. The amber markers are displayed at the corners of the vehicle icon. The next time the ignition switch is placed in the "ON" position, "sonar is OFF" is displayed briefly.
Towing mode: When this item is turned ON, only the rear sonar is OFF. The amber markers are displayed at the rear corners of the vehicle icon.
Show Camera when Sonar Activate: When this item is turned ON, the camera view is automatically shown on the display in the case that the distance to the objects measured by the sonar is becoming short.
Sonar Sensitivity: Adjust the sensitivity level of the sonar higher (right) or lower (left).

SONAR SYSTEM LIMITATIONS

⚠ WARNING

Listed below are the system limitations for the sonar function. Failure to operate the vehicle in accordance with these system limitations could result in serious injury or death.

- **Inclement weather or ultrasonic sources such as an automatic car wash, a trucks's compressed-air brakes or a pneumatic drill may affect the function of the system, including reduced performance or a false activation.**
- **The system is not designed to prevent contact with small or moving objects.**
- **The system will not detect small objects below the bumper, and may not detect objects close to the bumper or on the ground.**
- **The system may not detect the following objects:**
  - **Fluffy objects such as snow, cloth, cotton, grass or wool.**
  - **Thin objects such as rope, wire or chain.**
  - **Wedge-shaped objects.**
- **If your vehicle sustains damage to the bumper fascia, leaving it misaligned or bent, the sensing zone may be altered causing inaccurate measurement of objects or false alarms.**

⚠ CAUTION

Excessive noise (such as audio system volume or an open vehicle window) will interfere with the tone and it may not be heard.

System temporarily unavailable

When the amber markers are displayed at the corners of the vehicle icon and the function cannot be activated from the Camera setting menu (the setting items are grayed out), the sonar system may be malfunctioning.

SYSTEM MAINTENANCE

⚠ CAUTION

Keep the surface of the sonar sensors (located on the front and rear bumper fascia) free from accumulations of snow, ice and dirt. Do not scratch the surface of the sonar sensors when cleaning. If the sensors are covered, the accuracy of the sonar function will be diminished.

MOVING OBJECT DETECTION (MOD)
(if so equipped)

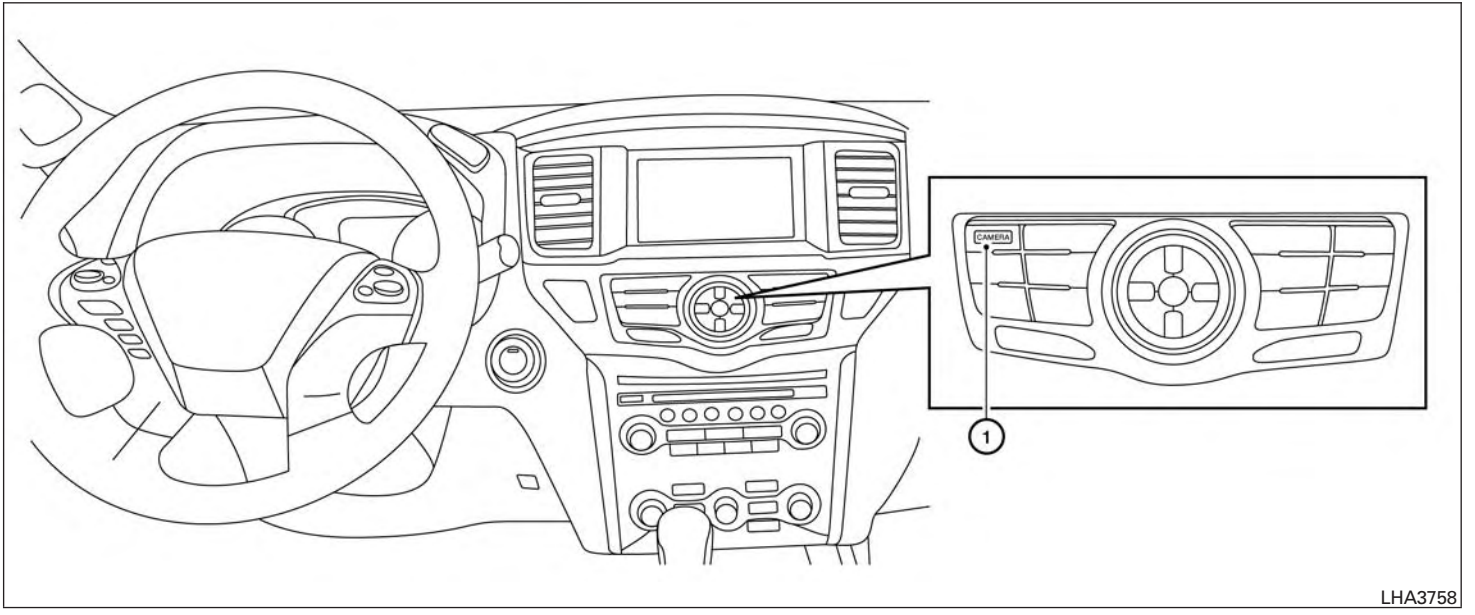

1. CAMERA button

⚠ WARNING

- **Failure to follow the warnings and instructions for proper use of the Moving Object Detection system could result in serious injury or death.**
- **The MOD system is not a substitute for proper vehicle operation and is not designed to prevent contact with objects surrounding the vehicle. When maneuvering, always use the outside mirrors and rearview mirror and turn and check the surroundings to ensure it is safe to maneuver.**
- **The system is deactivated at speeds above 6 mph (10 km/h). It is reactivated at lower speeds.**
- **The MOD system is not designed to detect surrounding stationary objects.**

The MOD system can inform the driver of moving objects near the vehicle when backing out of garages, maneuvering in parking lots and in other such instances.

The MOD system detects moving objects by using image processing technology on the image shown in the display.

MOD SYSTEM OPERATION

The MOD system will turn on automatically under the following conditions:

- When the shift lever is in the R (Reverse) position.
- When the CAMERA button is pressed to activate the camera view on the display.
- When vehicle speed decreases below approximately 6 mph (10 km/h) and the camera screen is displayed.

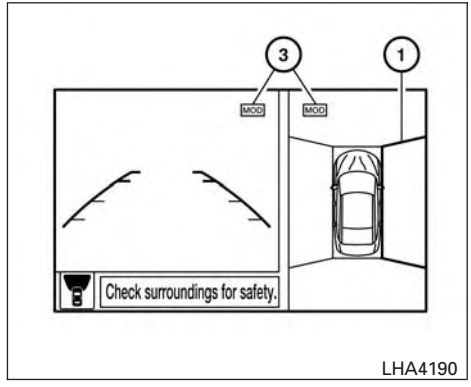

Front and bird's-eye views

The MOD system operates in the following conditions when the camera view is displayed:

- When the shift lever is in the P (Park) or N (Neutral) position and the vehicle is stopped, the MOD system detects moving objects in the bird's-eye view. The MOD system will not operate if the outside mirrors are moving in or out, in the stowed position, or if either front door is opened.
- When the shift lever is in the D (Drive) position and the vehicle speed is below approximately 6 mph (10 km/h), the MOD system detects moving objects in the front view.

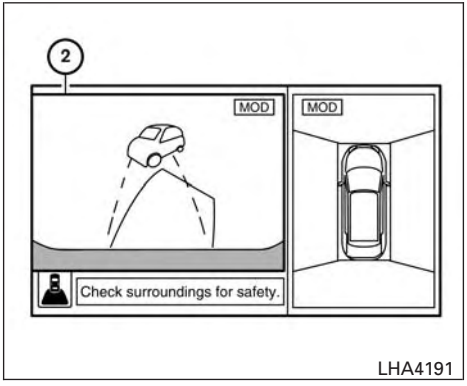

Rear and bird's-eye views

- When the shift lever is in the R (Reverse) position and the vehicle speed is below approximately 6 mph (10 km/h), the MOD system detects moving objects in the rear view. The MOD system will not operate if the liftgate is open.

The MOD system does not detect moving objects in the front-side view. The MOD icon is not displayed on the screen when in this view.

When the MOD system detects moving objects near the vehicle, a yellow frame will be displayed on the view where the objects are detected.

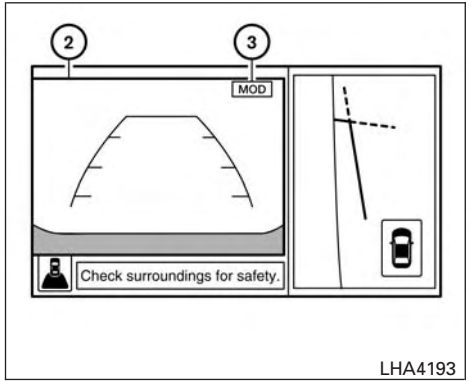

Rear and front-side views

While the MOD system continues to detect moving objects, the yellow frame continues to be displayed.

NOTE:

While the RCTA chime (if so equipped) is beeping, the MOD system does not chime.

In the bird's-eye view, the yellow frame ① is displayed on each camera image (front, rear, right, left) depending on where moving objects are detected.

The yellow frame ② is displayed on each view in the front view and rear view modes.

A blue MOD icon ③ is displayed in the view where the MOD system is operative. A gray MOD icon is displayed in the view where the MOD system is not operative.

If the MOD system is turned off, the MOD icon ③ is not displayed.

TURNING MOD ON AND OFF

1. Press the SETTING button on the control panel
2. Touch the Camera/Sonar key
3. Select Camera
4. Touch "Moving Object Detection" to switch between ON and OFF.

MOD SYSTEM LIMITATIONS

⚠WARNING

Listed below are the system limitations for MOD. Failure to operate the vehicle in accordance with these system limitations could result in serious injury or death.

- **Do not use the MOD system when towing a trailer. The system may not function properly.**

- **Excessive noise (for example, audio system volume or open vehicle window) will interfere with the chime sound, and it may not be heard.**
- **The MOD system performance will be limited according to environmental conditions and surrounding objects such as:**
  - **When there is low contrast between background and the moving objects.**
  - **When there is a blinking source of light.**
  - **When strong light such as another vehicle's headlight or sunlight is present.**
  - **When camera orientation is not in its usual position, such as when a mirror is folded.**
  - **When there is dirt, water drops or snow on the camera lens.**
  - **When the position of the moving objects in the display is not changed.**
- **The MOD system might detect flowing water droplets on the camera lens, white smoke from the muffler, moving shadows, etc.**
- **The MOD system may not function properly depending on the speed, direction, distance or shape of the moving objects.**
- **If your vehicle sustains damage to the parts where the camera is installed, leaving it misaligned or bent, the sensing zone may be altered and the MOD system may not detect objects properly.**
- **When the temperature is extremely high or low, the screen may not display objects clearly. This is not a malfunction.**

NOTE:

The blue MOD icon will change to orange if one of the following has occurred

- When the system is malfunctioning.
- When the component temperature reaches a high level (icon will blink).
- When the Rear View camera has detected a blockage (icon will blink). :

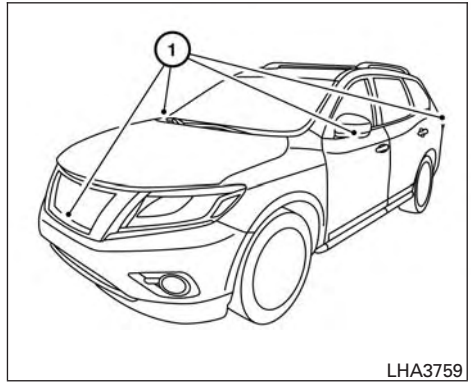

LHA3759

SYSTEM MAINTENANCE

⚠ CAUTION

- **Do not use alcohol, benzine or thinner to clean the camera. This will cause discoloration.**
- **Do not damage the camera as the monitor screen may be adversely affected.**

If dirt, rain or snow accumulates on any of the cameras ①, the MOD system may not operate properly. Clean the camera by wiping with a cloth dampened with a diluted mild cleaning agent and then wiping with a dry cloth.

VENTS

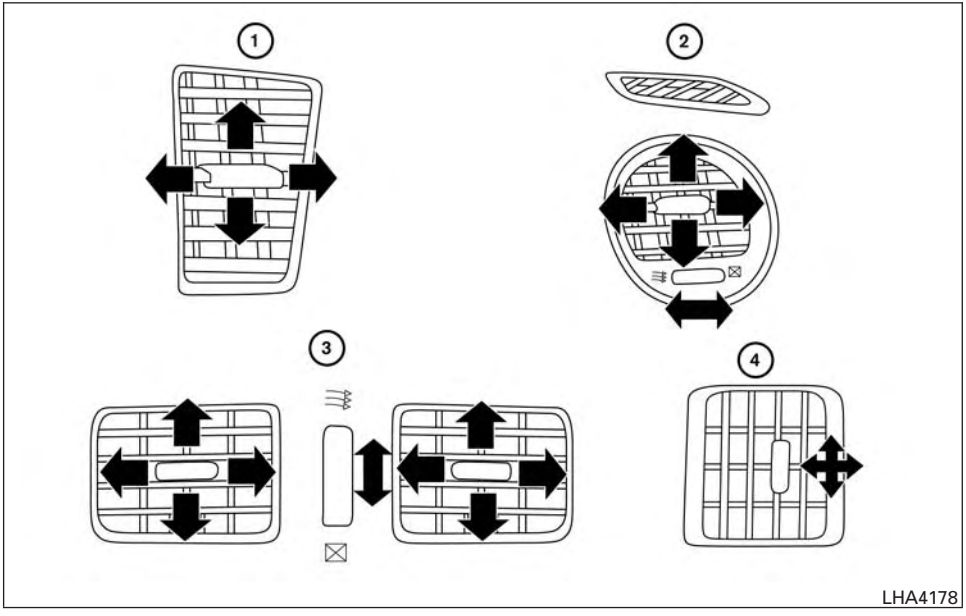

Adjust air flow direction for the center vents ①, driver's and passenger's side vents ②, rear center console vents ③, and rear passenger compartment vents ④ by moving the vent slide and/or vent assemblies.

Open or close the vents using the dial. Move the dial toward the ≋ to open the vents or toward the ⊠ to close them.

HEATER AND AIR CONDITIONER
(automatic)(if so equipped)

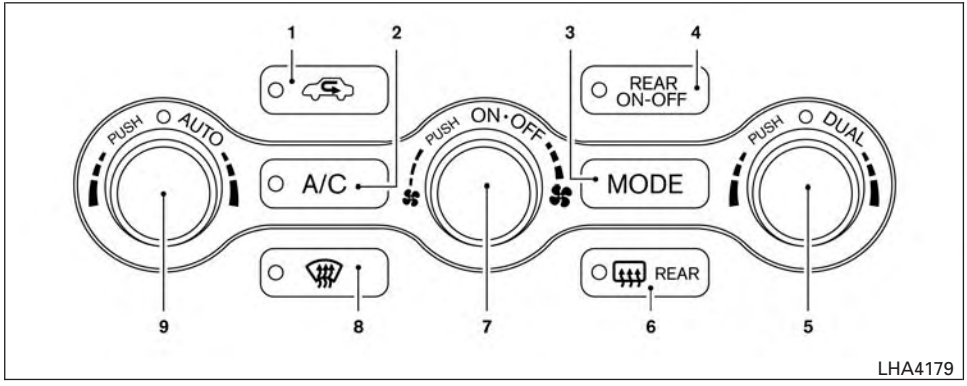

Type A (if so equipped)

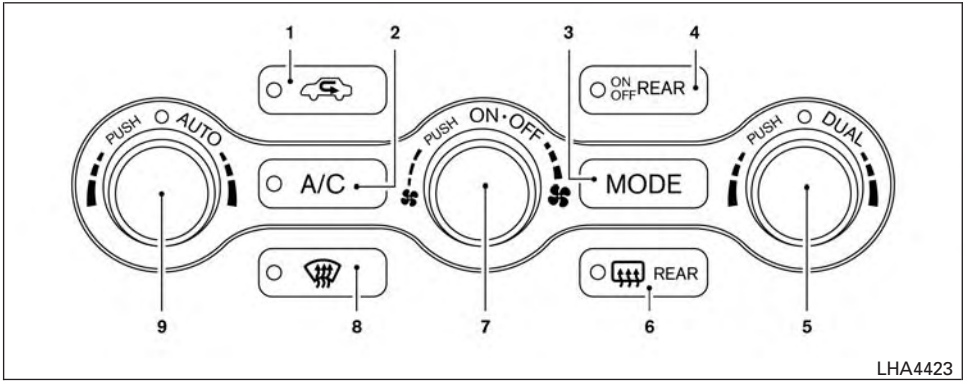

Type B (if so equipped)

1. Air recirculation button
2. A/C (air conditioner) ON-OFF button
3. MODE (manual air flow control) button
4. REAR (ON-OFF) button
5. DUAL (passenger's side temperature control) ON-OFF button/Temperature control dial (passenger's side)
6. Rear window and outside mirror (if so equipped) defroster switch
7. ON-OFF button/ (fan speed control) dial
8. Front defroster button
9. AUTO (automatic) climate control ON-OFF button/Temperature control dial (driver's side)

WARNING

- **The air conditioner cooling function operates only when the engine is running.**
- **Do not leave children or adults who would normally require the assistance of others alone in your vehicle. Pets should also not be left alone. They could accidentally injure themselves or others through inadvertent operation of the vehicle. Also, on hot, sunny days, temperatures in a closed vehicle could quickly become high enough to cause severe or possibly fatal injuries to people or animals.**
- **Do not use the recirculation mode for long periods as it may cause the interior air to become stale and the windows to fog up.**

Start the engine and operate the controls to activate the air conditioner.

NOTE:

- Odors from inside and outside the vehicle can build up in the air conditioner unit. Odor can enter the passenger compartment through the vents.

- When parking, set the heater and air conditioner controls to turn off air recirculation to allow fresh air into the passenger compartment. This should help reduce odors inside the vehicle.

AUTOMATIC OPERATION

Cooling and/or dehumidified heating (AUTO)

This mode may be used all year round as the system automatically works to keep a constant temperature. Air flow distribution, air intake control, and fan speed are also controlled automatically.

1. Press the AUTO button on.
2. Turn the temperature control dial to the left or right to set the desired temperature.

- Adjust the temperature display to about 75°F (24°C) for normal operation.
- The temperature of the passenger compartment will be maintained automatically. Air flow distribution, air intake control and fan speed are also controlled automatically.
- A visible mist may be seen coming from the vents in hot, humid conditions as the air is cooled rapidly. This does not indicate a malfunction.

3. You can individually set driver's and front passenger's side temperature using each temperature control dial. When the DUAL button or passenger's side temperature dial is turned, the DUAL indicator will come on. To turn off the passenger's side temperature control, press the DUAL button.

Heating (A/C OFF)

The air conditioner does not activate. When you need to heat only, use this mode.

1. If the air conditioner is on, press the A/C button. The A/C indicator will turn off.
2. Turn the temperature control dial to set the desired temperature.

- The temperature of the passenger compartment will be maintained automatically. Air flow distribution and fan speed are also controlled automatically.
- Do not set the temperature lower than the outside air temperature. Otherwise, the system may not work properly.
- Not recommended if windows fog up.

Dehumidified defrosting or defogging

1. Press the front defroster button on. (The indicator light on the button will come on.)
2. Turn the temperature control dial to set the desired temperature.

- To quickly remove ice from the outside of the windows, use the fan speed control dial to set the fan speed to maximum.
- As soon as possible after the windshield is clean, press the AUTO button to return to the automatic mode.
- When the front defroster button is pressed, the air conditioner will automatically be turned on at outside temperatures above 36°F (2°C). The air recirculate mode automatically turns off, allowing outside air to be drawn into the passenger compartment to further improve the defogging performance.

Remote engine start logic (if so equipped)

Vehicles equipped with automatic climate controls and remote start function may go into automatic heating or cooling mode when remote start is activated depending on outside and cabin temperatures. During this period, the climate control display and buttons will be inoperable until the ignition switch is turned on. In remote start defrosting mode, the heated steering wheel (if so equipped) may be activated automatically.

Voice Recognition logic (if so equipped)

When the climate control system is on, the front and rear fan speeds may be automatically lowered so that commands are more easily recognized. Fan speed can be adjusted using the fan speed decrease and increase buttons, if desired.

MANUAL OPERATION

Fan speed control

Turn the fan speed control dial to manually control the fan speed.
Press the AUTO button to return to automatic control of the fan speed.

Temperature control dial

The temperature control dial allows you to adjust the temperature of the outlet air. To lower the temperature, turn the dial to the left. To increase the temperature, turn the dial to the right. Temperature can be adjusted on the driver's and passenger's side.

Air recirculation

Press the air recirculation button to recirculate interior air inside the vehicle.

The air recirculation cannot be activated when the air conditioner is in the front defogging mode.

Automatic intake air control

In the AUTO mode, the intake air will be controlled automatically. To manually control the intake air, press the air recirculation button. To return to the automatic control mode, press and hold the air recirculation button for about 2 seconds. The indicator light will flash twice, and then the intake air will be controlled automatically.

Air flow control

Pressing the MODE button manually controls air flow and selects the air outlet:

- — Air flows from center and side vents.
- — Air flows from center and side vents and foot outlets.
- — Air flows mainly from foot outlets.
- — Air flows from defroster and foot outlets.
- — Air flows from defroster outlets.

To turn system off

Press the ON-OFF button to turn the system off.

To turn system on

Press the ON-OFF button when the heater or air conditioner is off. The system will turn on with the settings that were used immediately before the system was turned off.

CLIMATE button

Press the CLIMATE button on the multi-function control panel to display the screen for front air conditioner operations.

Rear window and outside mirror (if so equipped) defroster switch

For additional information, refer to “Rear window and outside mirror (if so equipped) defroster switch” in the “Instruments and controls” section of this manual.

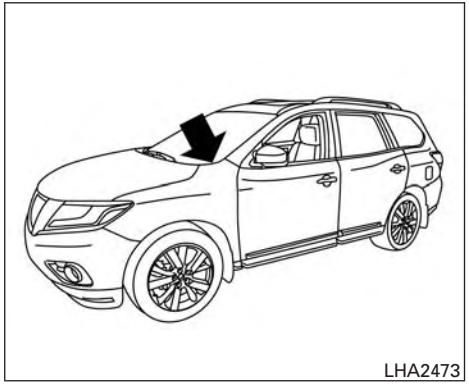

OPERATING TIPS

The sunload sensor, located on the top driver's side of the instrument panel, helps the system maintain a constant temperature. Do not put anything on or around this sensor.

- When the engine coolant temperature and outside air temperature are low, the air flow from the foot outlets may not operate for a maximum of 150 seconds. However, this is not a malfunction. After the coolant temperature warms up, air flow from the foot outlets will operate normally.

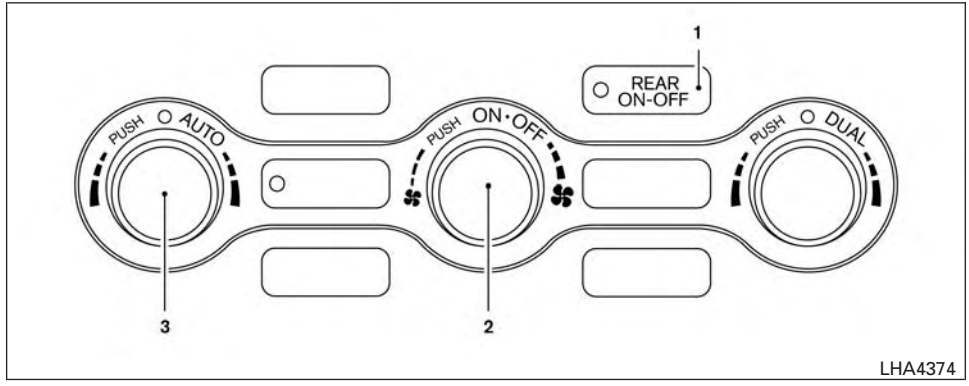

Front Controls (Type A-if so equipped)

REAR AUTOMATIC AIR CONDITIONING SYSTEM

1. REAR (ON-OFF) button
2. ON-OFF button/ (fan speed) control dial
3. AUTO button/temperature control dial (driver's side)

To turn on the rear automatic air conditioning system with the front air conditioner control panel, press the REAR ON-OFF button.

The rear automatic air conditioning system can be adjusted with the front air conditioner control panel when the Rear Climate screen is displayed.

To control the rear automatic air conditioning system using the display, press the CLIMATE button on the center multi-function control panel and touch the Rear Climate key displayed on the screen. The front display will switch to the Rear Climate screen.

To adjust the front air conditioning system, press the CLIMATE button on the center multi-function control panel.

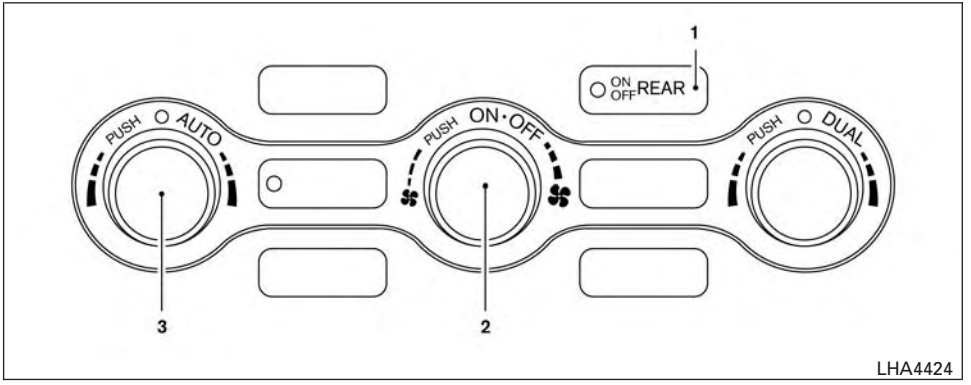

Front Controls (Type B-if so equipped)

Automatic operation

1. Press the AUTO button. The AUTO indicator will illuminate in the display.
2. Turn the temperature control dials to set desired temperature. Temperature can be controlled using the display screen. Touch the ^ v keys to set the desired temperature.

Manual operation

- **Temperature control**
  Turn the temperature control dial to set the desired temperature.
- **Fan speed control**
  Turn the (fan speed) control dial to manually control the fan speed. Fan speed can also be controlled using the display screen. Touch the + or - key to set the desired fan speed.

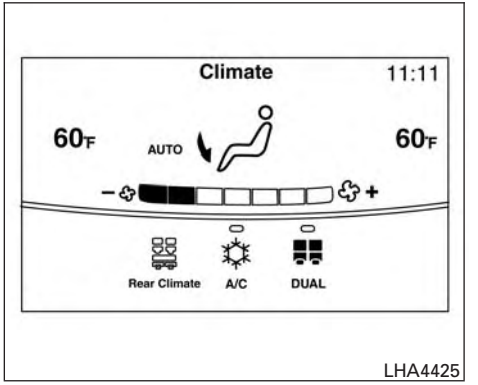

Rear Heating

1. To control the rear automatic air conditioning system, press the CLIMATE button on the center multi-function control panel. When the display shows front climate control, touch the Rear Climate key displayed on the screen.
2. Press the AUTO button. The AUTO indicator will illuminate in the display. Or, using the touch-screen display, touch the right side arrow key to display additional keys; touch the AUTO key on the display and the feature will activate.

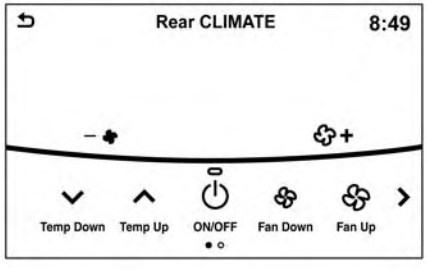

LHA4219

3. Turn the temperature control dial to set the desired temperature.

- Do not set the temperature lower than the outside air temperature. Doing so may cause the temperature to not be controlled properly.

Turning the system off

- Press the REAR ON-OFF button on the front control panel to turn the Rear Climate system off. The indicator light will turn off.
- Press the ON-OFF button/ fan speed control dial. The rear climate controls will turn off.

Turning the system off using the display screen

1. To turn the system off using the display screen, press the CLIMATE button on the center multi-function control panel until the Rear Climate screen is displayed. When the display shows front climate control, touch the Rear Climate key displayed on the screen.
2. Touch the ON/OFF key to turn off the rear controls in the Rear Climate display screen.

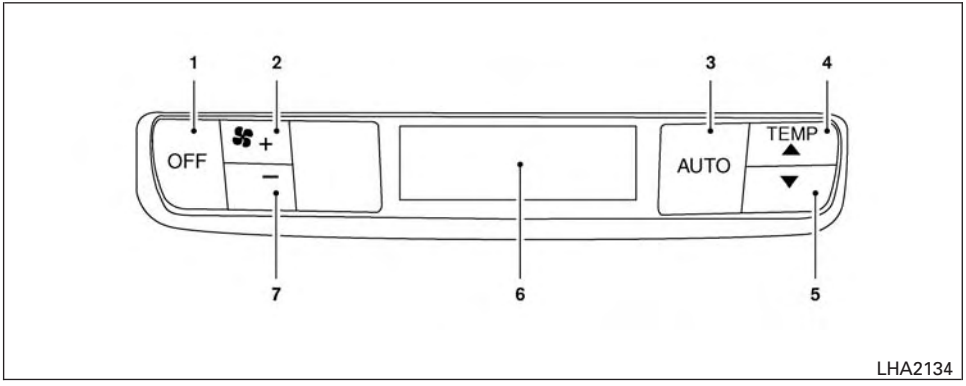

Rear Controls

Rear control buttons

1. OFF button
2. ✤ + (fan speed increase) button
3. AUTO button
4. ▲ (temperature increase) button
5. ▼ (temperature decrease) button
6. Display
7. — (fan speed decrease) button

The rear seat passengers can adjust the rear automatic air conditioning system using the control switches at the rear of the center console.

The rear control buttons do not function when the Rear Climate screen is shown on the front display. To activate the rear control buttons, press the CLIMATE button and the screen will return to Front Climate control. This will enable the second row Rear Climate controls.

- **OFF button** Turns rear automatic air conditioning system off.
- **Fan speed increase and decrease buttons** Adjusts the rear fan speed up or down.
- **AUTO button** Turns rear automatic air conditioning system on, AUTO mode on.
- **Temperature increase and decrease buttons** Adjusts the rear temperature up or down.

SERVICING AIR CONDITIONER

The air conditioner system in your NISSAN vehicle is charged with a refrigerant designed with the environment in mind.

This refrigerant does not harm the earth's ozone layer.

Special charging equipment and lubricant is required when servicing your NISSAN air conditioner. Using improper refrigerants or lubricants will cause severe damage to your air conditioner system. For additional information, refer to "Air conditioner system refrigerant and oil recommendations" in the "Technical and consumer information" section of this manual.

It is recommended that you visit a NISSAN dealer to service your "environmentally friendly" air conditioner system.

⚠ WARNING

The air conditioner system contains refrigerant under high pressure. To avoid personal injury, any air conditioner service should be done only by an experienced technician with proper equipment.

AUDIO SYSTEM

AUDIO OPERATION PRECAUTIONS

⚠ WARNING

- **The driver must not attempt to operate the audio system while the vehicle is in motion, so that full attention may be given to the vehicle operation.**
- **Park the vehicle in a safe location and apply the parking brake before operating the audio system and playing movies (where fitted).**

⚠ CAUTION

- **Operate the audio system only when the vehicle engine is running. Operating the audio system for extended periods of time with the engine turned off can discharge the vehicle battery.**
- **Do not allow these systems to get wet. Excessive moisture such as spilled liquids may cause the system to malfunction.**

Radio

Place the ignition switch in the ACC or ON position before turning on the radio. If you listen to the radio when the engine is not running, the ignition switch should be pushed to ACC position.

Radio reception is affected by station signal strength, distance from the radio transmitter, buildings, bridges, mountains, and other external influences. Intermittent changes in reception quality are normally caused by these external influences.

Using a cellular phone in or near the vehicle may influence radio reception quality.

Radio reception

Your radio system is equipped with state-of-the-art electronic circuits to enhance radio reception. These circuits are designed to extend reception range, and to enhance the quality of that reception.

However there are some general characteristics of both FM and AM radio signals that can effect radio reception quality in a moving vehicle, even when the best quality equipment is used. These characteristics are completely normal in a given reception area, and do not indicate any malfunction in your radio system.

Reception conditions will constantly change because of vehicle movement. Buildings, terrain, signal distance and interference from other vehicles can adversely affect ideal reception. Described below are some of the factors that can affect radio reception.

Some cellular phones or other devices may cause interference or a buzzing noise to come from the audio system speakers. Storing the device in a different location may reduce or eliminate the noise.

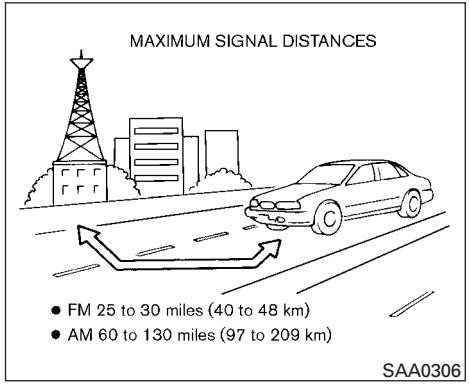

FM radio reception

Maximum Signal Distances

- FM: 25 to 30 miles (40 to 48 km)
- AM: 60 to 130 miles (97 to 209 km)

Range: FM range in normally limited to 25 to 30 miles (40 to 48 km) with monaural (single station) FM having slightly more range than stereo FM. External influences may sometimes interfere with FM station reception even if the FM station is within the 25 miles (40 km) . The strength of the FM signal is directly related to the distance between the transmitter and receiver. FM signals follow a line-of-sight path, exhibiting many of the same characteristics as light. For example they will reflect off objects.

Fade and drift: As your vehicle moves away from a station transmitter, the signals will tend to fade and/or drift.

Static and flutter: During signal interference from buildings, large hills or due to antenna position, usually in conjunction with an increased distance from the station transmitter, static or flutter can be heard. This can be reduced by lowering the treble setting to reduce the treble response.

Multipath reception: Because of the reflective characteristics of FM signals, direct and reflected signals reach the receiver at the same time. The signals may cancel each other, resulting in momentary flutter or loss of sound.

AM radio reception

AM signals, because of their low frequency, can bend around objects and skip along the ground. In addition, the signals can bounce off the ionosphere and be bent back to earth. Because of these characteristics, AM signals are also subject to interference as they travel from transmitter to receiver.

Fading: This occurs while the vehicle is passing through freeway underpasses or in areas with many tall buildings. It can also occur for several seconds during ionospheric turbulence even in areas where no obstacles exist.

Static: Caused by thunderstorms, electrical power lines, electric signs and even traffic lights.

HD Radio™ Technology reception (for U.S.)

HD Radio™ Technology reception needs to be activated to receive HD Radio broadcasts. For additional information, refer to “Audio settings” in this section.

This enables you to receive radio broadcasts digitally (where available), providing a better quality sound with clear reception. When this feature is not activated or HD Radio broadcasts are not available, you will receive analog radio (AM/FM) broadcasts.

Satellite radio reception

When the satellite radio is used for the first time or the battery has been replaced, the satellite radio may not work properly. This is not a malfunction. Wait more then 10 minutes with the satellite radio on and the vehicle outside of any metal or large building for the satellite radio to receive all of the necessary date.

The satellite radio requires an active SiriusXM Satellite Radio subscription. The satellite service is available only to those at least 18 and older in the 48 contiguous United States.

The satellite radio performance may be affected if the cargo carried on the roof blocks the satellite radio signal.

If possible, do not put cargo near the satellite antenna.

The build up of ice on the satellite radio antenna can affect satellite radio performance. Remove the ice to restore satellite radio reception.

Trademarks

HD Radio®

HD Radio Technology manufactured under license from iBqiuity Digital Corporation. U.S. and Foreign Patents. HD Radio™ and the HD, HD Radio, and “ARC” logos are proprietary trademarks of iBiquity Digital; Corp.

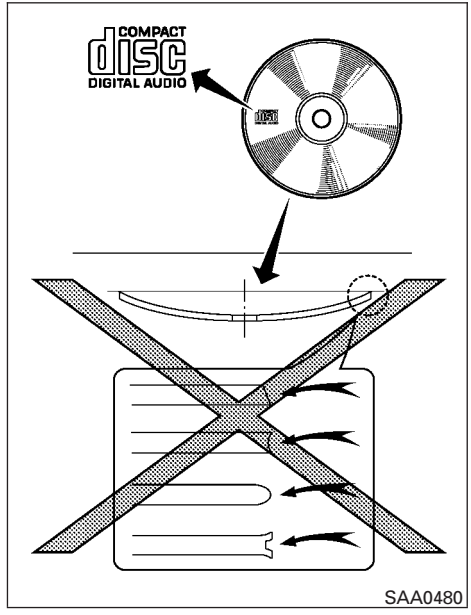

Compact Disc (CD) player

- Do not force a compact disc into the CD insert slot. This could damage the CD and/or CD player.
- Trying to load a CD with the CD door closed could damage the CD and/or CD player.

- During cold or rainy weather, the player may malfunction due to the humidity. If this occurs, remove the CD and dehumidify or ventilate the player completely.
- The player may skip while driving on rough roads.
- The CD player sometimes cannot function when the passenger compartment temperature is extremely high. Decrease the temperature before use.
- Only use high quality 4.7 in. (12 cm) round discs that have the "COMPACT disc DIGITAL AUDIO" logo on the disc or packaging.
- Do not expose the CD to direct sunlight.
- CDs that are of poor quality, are dirty, scratched, or covered with fingerprints, or that have pin holes may not work properly.
- The following CDs may not work properly:
  - Copy control compact discs (CCCD)
  - Recordable compact discs (CD-R)
  - Rewritable compact discs (CD-RW)
- Do not use the following CDs as they may cause the CD player to malfunction.
  - 3.1 in (8 cm) discs
  - CDs that are not round
  - CDs with a paper label
  - CDs that are warped, scratched, or have abnormal edges
- This audio system can only play prerecorded CDs. It has no capabilities to record or burn CDs.
- If a CD cannot be played, one of the following messages will be displayed.

[Disc read error:]

Indicates a CLV/Focus, TOC or Access error. Check and re-insert the CD. Make sure that it is inserted correctly.

[Eject disc, please:]

Indicates a mechanism error. If the CD can be ejected, eject and re-insert the CD. If the CD cannot be ejected, it is recommended that you contact a NISSAN dealer.

[Unplayable error:]

Indicates that no readable files are found on the inserted CD. Check the data on your CD.

Compressed audio files (MP3/WMA/AAC)

Explanation of terms:

- MP3 — MP3 is short for Moving Pictures Experts Group Audio Layer 3. MP3 is the most well known compressed digital audio file format. This format allows for near "CD quality" sound, but at a fraction of the size of normal audio files. MP3 conversion of an audio track can reduce the file size by approximately a 10:1 ratio (sampling: 44.1 kHz, bit rate: 128 kbps) with virtually no perceptible loss in quality. The compression reduces certain parts of the sound that seem inaudible to most people.
- WMA — Windows Media Audio (WMA) is a compressed audio format created by Microsoft as an alternative to MP3. The WMA codec offers greater file compression than the MP3 codec, enabling storage of more digital audio tracks in the same amount of space when compared to MP3s at the same level of quality.
- Bit rate — Bit rate denotes the number of bits per second used by a digital music file. The size and quality of a compressed digital audio file is determined by the bit rate used when encoding the file.

- Sampling frequency — Sampling frequency is the rate at which the samples of a signal are converted from analog to digital (A/D conversion) per second.
- Multisession — Multisession is one of the methods for writing data to media. Writing data once to the media is called a single session, and writing more than once is called a multisession.
- ID3/WMA Tag — The ID3/WMA tag is the part of the encoded MP3 or WMA file that contains information about the digital music file such as song title, artist, album title, encoding bit rate, and track time duration, etc. ID3 tag information is displayed on the Album/Artist/Track title line on the display.

* Windows® and Windows Media® are registered trademarks or trademarks of Microsoft Corporation in the United States of America and/or other countries.

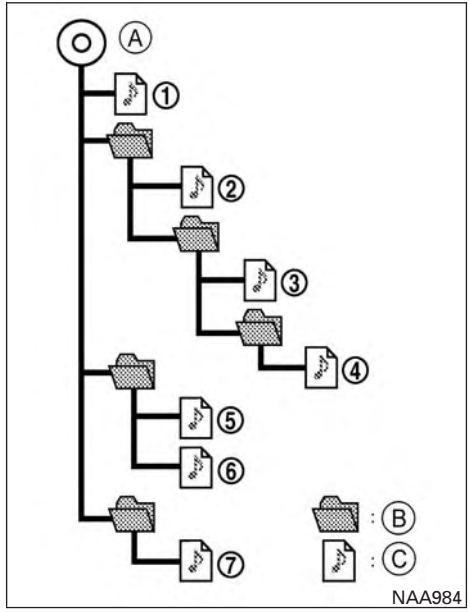

Playback order:

Ⓐ Root folder

Ⓑ Folder

Ⓒ Audio file

- The folder names of folders not containing compressed audio files are not shown on the display.
- If there is a file in the top level of a disc/USB, the root folder is displayed.
- The playback order is the order in which the files were written by the writing software, so the files might not play in the desired order.
- The music playback order of compressed audio files is as illustrated.

Specification chart for CD:

Supported media			CD, CD-R, CD-RW
Supported file systems			CD, CD-R, CD-RW
Supported versions*1	MP3	Version	MPEG1 Audio Layer3, MPEG2 Audio Layer3, MPEG2.5 Audio Layer3
		Sampling frequency	MPEG2.5 Audio Layer3: 8kHz, 11.025kHz, 12kHz MPEG2 Audio Layer3: 16kHz, 22.05kHz, 24kHz MPEG1 Audio Layer3: 32kHz, 44.1kHz, 48kHz
		Bit rate	8 kbps - 320 kbps, VBR
	WMA*2	Version	WMA7, WMA8, WMA9.1, WMA9.2
		Bit rate / Sampling frequency	Bit rate: Ver7, Ver8: 32–192kbps Ver9, Ver9.1, Ver9.2: 32–192kbps, VBR Sampling frequency: Ver7, Ver8: 8k/11.025k/16k/22k/32k/44.1k Ver9, Ver9.1, Ver9.2: 8k/11.025k/16k/22k/32k/44.1k/48 kHz
	AAC*4	Bit rate / Sampling frequency	Bit rate: 8–320 kbps, VBR Sampling frequency: 11.025–48kHz
Tag information (Song title, Artist name and Album name)			ID3 tag VER1.0, VER1.1, VER2.2, VER2.3, VER2.4 (MP3 only)
			WMA Tag (WMA only)
			AAC Tag (AAC only)
Folder levels			CD, CD-R, CD-RW: Folder levels: 8, Folders: 255 (including root folder), Files: 510 (Max. 255 files for one folder)
Displayable character codes*3			01: SHIFT-JIS, ASCII, ISO–8859–1, UTF-8, UTF-16 BOM, UTF-16 Big Endian, UTF-16 Little Endian, 02: UNICODE, 03: UTF-16

*1 Files created with a combination of 48 kHz sampling frequency and 64 kbps bit rate cannot be played.

*2 Protected WMA files (DRM) cannot be played.

*3 Available codes depend on what kind of media, versions, and information are going to be displayed.

*4 Made by iTunes.

Windows Media Player:

This product is protected by certain intellectual property rights of Microsoft. Use or distribution of such technology outside of this product is prohibited without a license from Microsoft.

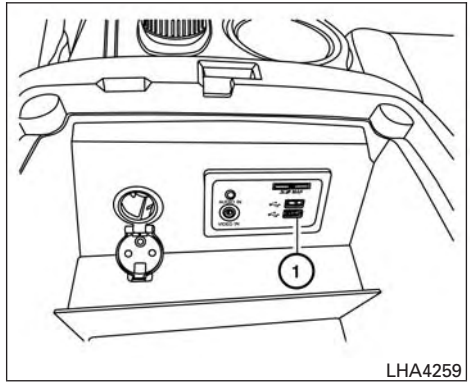

USB/iPod® connection port

The USB/iPod® connection port is located in the center console and consists of the USB connectors.

① USB/iPod® connection port

Connect to play media from an iPod®, iPhone®, or a USB memory device. When using NissanConnect℠ Apps with an iPhone®, connect via a USB cable. Refer to the device manufacturer's owner information regarding the proper use and care of the device.

⚠ WARNING

Do not connect, disconnect or operate the USB device while driving. Doing so can be a distraction. If distracted you could lose control of your vehicle and cause an accident or serious injury.

⚠ CAUTION

- **Do not force the USB device into the USB port. Inserting the USB device tilted or upside down into the port may damage the port. Make sure that the USB device is connected correctly into the USB port.**
- **Do not grab the USB port cover (if so equipped) when pulling the USB device out of the port. This could damage the port and the cover.**
- **Do not leave the USB cable in a place where it can be pulled unintentionally. Pulling the cable may damage the port.**

Made for iPod iPhone

"Made for iPod®" and "Made for iPhone®" mean that an electronic accessory has been designed to connect specifically to iPod® or iPhone®, respectively, and has been certified by the developer to meet Apple performance standards. Apple is not responsible for the operation of this device or its compliance with safety and regulatory standards. Please note that the use of this accessory with iPod® or iPhone® may affect wireless performance.

Apple, the Apple logo, iPhone®, iPod®, iPod classic®, iPod nano®, and iPod® touch are trademarks of Apple Inc., registered in the U.S. and other countries. Lightning is a trademark of Apple Inc. App Store is a service mark of Apple Inc.

This vehicle is not equipped with a USB device. USB devices should be purchased separately as necessary.

This system cannot be used to format a USB devices. To format a USB device, use a personal computer.

In some jurisdictions, the USB device for the front seats plays only sound without images for regulatory reasons, even when the vehicle is parked.

This system supports various USB memory devices, USB hard drives and iPod® players. Some USB devices may not be supported by this system.

- Partitioned USB devices may not play correctly.
- Some characters used in other languages (Chinese, Japanese, etc.) may not appear properly in the display. Using English language characters with a USB device is recommended.

General notes for USB use:

Refer to your device manufacturer's owner information regarding the proper use and care of the device.

Notes for iPod® use:

iPod® is a trademark of Apple Inc., registered in the U.S. and other countries.

- Improperly plugging in the iPod® may cause a check-mark to be displayed on and off (flickering). Always make sure that the iPod® is connected properly.
- An iPod nano® (1st generation) may remain in fast forward or rewind mode if it is connected during a seek operation. In this case, please manually reset the iPod®.
- An iPod nano® (2nd generation) will continue to fast forward or rewind if it is disconnected during a seek operation.
- An incorrect song title may appear when the Play Mode is changed while using an iPod nano® (2nd generation).
- Audiobooks may not play in the same order as they appear on an iPod®.
- Large video files cause slow responses in an iPod®. The vehicle display may momentarily black out, but will soon recover.
- If an iPod® automatically selects large video files while in the shuffle mode, the vehicle display may momentarily black out, but will soon recover.

Specification chart for USB

Supported media	USB2.0
Supported file systems	FAT32
Folder levels	Folder levels: 8, Folders: 512 (including the root folder), Files: 5000

Format		**Sampling rate**	**Supported/Not supported**
MPEG1	Layer-1	-	Not supported
	Layer-2	-	Not supported
	Layer-3	44.1, 48, 32 kHz	Supported (32–320 kbps)
MPEG2	Layer-1	-	Not supported
	Layer-2	-	Not supported
	Layer-3	22.05, 24, 16 kHz	Supported (16–160 kbps)
MPEG2.5	Layer-1	-	Not supported
	Layer-2	-	Not supported
	Layer-3	11.025, 12, 8 kHz	Supported (16–160 kbps)
WMA*1		32, 44.1, 48 kHz	Supported VER.7/8 (48–192 bps) VER.9/9.1/9.2 (48–320 bps)
AAC (MPEG4)*2 (Extension “m4a” only)		8, 11.025, 12, 16, 22.05, 24, 32, 44.1, 48 kHz	Supported (16–320 kbps)

*1 Professional (voice, lossless, multichannel) is not supported.

*2 AAC (MPEG-2) is not supported.

Bluetooth® Audio player

The Bluetooth® word mark and logos are registered trademarks owned by Bluetooth SIG, Inc. and any use of such marks by DENSO CORPORATION is under license. Other trademarks and trade names are those of their respective owners.

- Some Bluetooth® streaming audio devices may not be recognized by the in-vehicle audio system.
- It is necessary to set up the wireless connection between a compatible Bluetooth® streaming audio device and the in-vehicle Bluetooth® module before using the Bluetooth® streaming audio.
- The Bluetooth® streaming audio may be stopped under the following conditions:
  - When receiving a hands-free call
  - When checking the connection to the hand-free phone
  - When connecting the hands-free phone or audio device
  - When downloading a phonebook memory from a connected cellular phone
- Do not place a Bluetooth® streaming audio device in an area surrounded by metal or far away from the in-vehicle Bluetooth® module to prevent tone quality degradation and wireless connection disruption.
- While an audio device is connected through Bluetooth® wireless connection, the battery of the device may discharge quicker than usual.
- This system supports the Bluetooth® Advanced Audio Distribution Profile (A2DP) and Audio/Video Remote Control Profile (AVRCP).
- Wireless LAN (Wi-Fi) and the Bluetooth® functions share the same frequency band (2.4 GHz). Using the Bluetooth® and the wireless LAN functions at the same time may slow down or disconnect the communication and cause undesired noise. It is recommended that you turn off the wireless LAN (Wi-Fi) when using the Bluetooth® functions.

Regulatory Information

La operación de este equipo está sujeta a las siguientes dos condiciones: (1) es posible que este equipo o dispositivo no cause interferencia perjudicial y (2) este equipo o dispositivo debe aceptar cualquier interferencia, incluyendo la que pueda causar su operación no deseada.

FCC Regulatory Information

FCC ID: HYQDNNS086

NOTE:

This device complies with part 15 of the FCC Rules. Operation is subject to the following two conditions: (1) This device may not cause harmful interference, and (2) this device must accept any interference received, including interference that may cause undesired operation.

FCC WARNING: Changes or modifications not expressly approved by the party responsible for compliance could void the user's authority to operate the equipment.

CAUTION: Radio Frequency Radiation Exposure

This equipment complies with FCC radiation exposure limits set forth for uncontrolled environment and meets the FCC radio frequency (RF) Exposure Guidelines. This equipment has very low levels of RF energy that it deemed to comply without maximum permissive exposure evaluation (MPE). But it is desirable that it should be installed and operated with at lease 20cm and more between the radiator and person's body.

Co-location: This transmitter must not be co-located or operated in conjunction with any other antenna or transmitter.

IC Regulatory Information

The antenna cannot be removed (and changed) by the user.

NOTE:

This device complies with Industry Canada license–exempt RSS standard(s). Operation is subject to the following two conditions: (1) This device may or may not cause interference, and (2) this device must accept any interference, including interference that may cause undesired operation of the device.

CAUTION: Radio Frequency Radiation Exposure

This equipment complies with IC radiation exposure limits set forth for uncontrolled environment and meets RSS-102 of the IC radio frequency (RF) exposure rules. This equipment has very low levels of RF energy that it deemed to comply without maximum permissive exposure evaluation (MPE). But it is desirable that it should be installed and operated with at least 20cm and more between the radiator and person's body.

Co-location: This transmitter must not be co-located or operated in conjunction with any other antenna or transmitter.

This Class B digital apparatus meets all requirements of the Canadian Interference Causing Equipment Regulations.

L'antenne ne peut être enlevé (et modifié par l'utilisateur).

NOTE:

Le préent appareil est conforme aux CNR d'Industrie Canada applicables aux appareils radio exempts de licence. L'exploitation est autorisé aux deux conditions suivantes: (1) l'appareil ne doit pas produire de brouillage, et (2) l'utilisateur de l'appareil doit accepter tout brouillage radioéectrique subi, mêe si le brouillage est susceptible d'en compromettre le fonctionnement.

Bluetooth®

The Bluetooth® word mark and logos are registered trademarks owned by Bluetooth SIG, Inc. and any use of such marks by DENSO CORPORATION is under license. Other trademarks and trade names are those of their respective owners.

Digital Versatile Disc (DVD) Player

Copyright and trademark:

- The technology protected by the U.S. patent and other intellectual property rights owned by Macrovision Corporation and other right holders is adopted for this system.
- This copyright protected technology cannot be used without a permit from Macrovision Corporation. It is limited to be for personal use, etc., as long as the permit from Macrovision Corporation is not issued.
- Modifying or disassembling is prohibited.

- Dolby digital is manufactured under license from Dolby Laboratories, Inc.
- Dolby and the double D mark are trademarks of Dolby Laboratories, Inc.
- DTS is a registered trademark DTS, Inc. and DTS 2.0 " " is a trademark of DTS, Inc.

Parental level (parental control):

DVDs with the parental control settings can be played with this system. Please use your own judgement to set the parental control with the system.

Disc selection:

You can play the following disc formats with the DVD drive:

- DVD-Video
- Video-CD
- DTS-CD

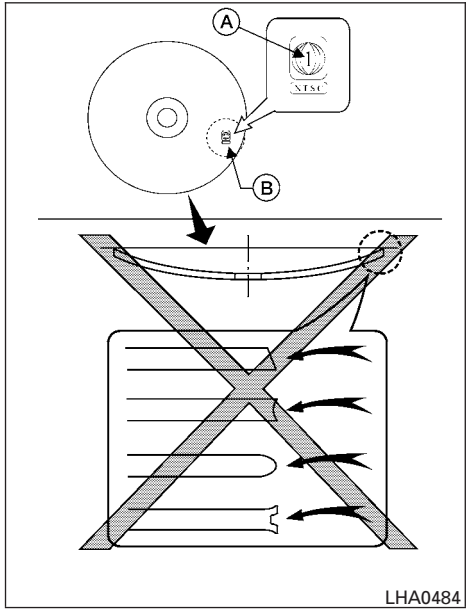

Use DVDs with the region code "ALL" or the code applicable to your DVD player. (The region code Ⓐ is displayed as a small symbol printed on the DVD Ⓑ.) This vehicle-installed DVD player can only play DVDs with an applicable region code.

Do not use the following DVDs as they may cause the DVD player to malfunction:

- **3.1 in (8 cm) discs**
- **DVDs with incompatible region code**
- **DVDs that are not round**
- **DVDs with a paper label**
- **DVDs that are warped, scratched, or have unequal edges**

The following DVDs may not work properly:

- Recordable digital video discs (DVD-R)
- Rewritable digital video discs (DVD-RW)

Specification chart for DVD

Playable media:

The following media can be played on the system.

- DVD+RW
- DVD+R
- DVD+R DL
- DVD-RW (corresponds to CPRM)
- DVD-R (corresponds to CPRM)
- DVD-R DL (corresponds to CPRM)
- DVD-ROM
- Duel DISC (not guaranteed)

Video codec:

The following video codecs are supported by the system.

Video file format	
DVD Video	
DVD-VR with CPRM	
VIDEO CD	Ver. 1.0
	Ver. 1.1
	Ver. 2.0
DTS CD	

Audio codec:

The following combinations of audio codecs support video formats.

Sound format	DVD-Video	DVD-VR	VIDEO-CD	DTS-CD
LPCM	Supported	Supported	Not supported	Not supported
Dolby Digital	Supported	Supported	Not supported	Not supported
Dolby Digital EX	Supported with limited output *1	Not supported	Not supported	Not supported
Dts	Supported	Not supported	Not supported	Supported
dts-ES	Supported with limited output *2	Not supported	Not supported	Not supported
dts 96/24	Supported with limited output *3	Not supported	Not supported	Not supported
MPEG1 Layer3	Supported	Supported	Supported	Not supported
MPEG2 Layer3	Supported with limited output *4	Supported with limited output	Not supported *5	Not supported

*1: A back surround channel is assigned to the LS and RS channels and output.

*2: A surround center channel is assigned to the LS and RS channels and output.

*3: Output in 48kHz/24bit.

*4: A back surround channel of DVD-Video and DVD-VR/MPEG2 is assigned to the LS and RS channels and output.

*5: MPEG2 Layer3 of VIDEO CD indicates SVCD. SVCD may play but its performance is not guaranteed. The 2ch output is utilized for the audio output of SVCD.

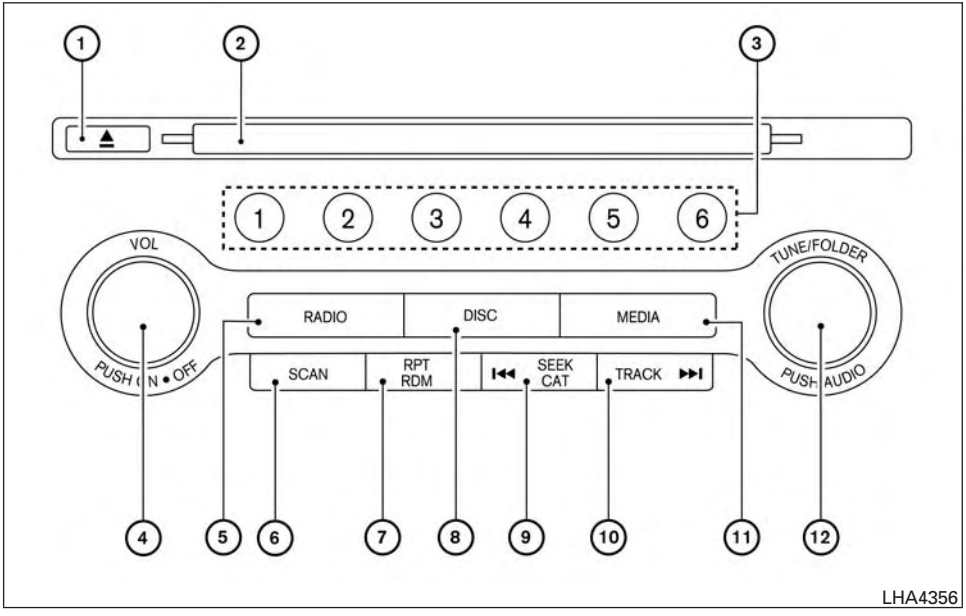

NAMES AND FUNCTIONS OF AUDIO CONTROL BUTTONS

Main audio buttons

① ⏏ button

Push to eject a disc.

② Disc slot:

Insert a disc with the label side facing up.

③ **Radio memory buttons**

Up to six preferred stations can be registered in the preset list for each band.

④ **VOL/ON•OFF** button

Push to turn the audio system on/off.
Turn to adjust the volume.

⑤ **RADIO** button

Push to switch to the radio mode. The radio band will switch between AM, FM and SXM (SiriusXM) each time the button is pushed.

⑥ **SCAN** button

Scans at each broadcasting station/channel for 5 seconds. Pushing the button again will stop SCAN tuning and the radio will remain tuned to that station/channel.

⑦ **RPT RDM** button

Changes the play mode.

⑧ **DISC** button

Plays the CD or DVD.

⑨ **SEEK•CAT** button

Functions to seek radio stations or to skip and fast-forward /rewind through tracks.

⑩ **TRACK** button

Functions to seek radio stations or to skip and fast-forward through tracks.

⑪ **MEDIA** button

Each time the button is pushed, a different audio source (iPod®, USB, Bluetooth® streaming audio, AUX or Rear Display) will be selected.

⑫ **TUNE/FOLDER AUDIO** button

Bass, treble, balance and fade can also be adjusted by pushing this button and turning the knob to select the item to adjust.

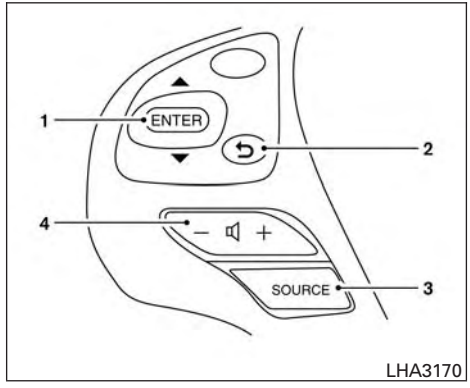

Steering Wheel Switch for Audio Control

The audio system can be operated using the controls on the steering wheel.

1. ▲▼ Tuning switch/ENTER button
2. ⮌ (back) switch
3. SOURCE switch
4. Volume control switch

SOURCE switch

With the ignition switch in the ACC or ON position, push the SOURCE switch to turn the audio system on.

Push the SOURCE switch to change the mode.

Volume control switch

Push the volume control switch to increase or decrease the volume.

Tuning switch/ENTER button

While the display is showing a MAP, STATUS or Audio screen, tilt the Tuning switch upward or downward to select a station, track, CD or folder. For most audio sources, tilting the switch up/down for more than 1.5 seconds provides a different function than tilting up/down for less than 1.5 seconds.

AM and FM

- Tilt up/down for less than 1.5 seconds to increase or decrease the preset station.
- Tilt up/down for more than 1.5 seconds to seek up or down to the next station.

XM

- Tilt up/down for less than 1.5 seconds to increase or decrease the preset station.
- Tilt up/down for more than 1.5 seconds to go to the next or previous category.

iPod®

- Tilt up/down for less than 1.5 seconds to increase or decrease the track number.

CD

- Tilt up/down for less than 1.5 seconds to increase or decrease the track number.
- Tilt up/down for more than 1.5 seconds to increase or decrease the folder number (if playing compressed audio files).

DVD

- Tilt up/down for less than 1.5 seconds to increase or decrease the track number.
- Tilt up/down for more than 1.5 seconds to increase or decrease the title number.

USB

- Tilt up/down for less than 1.5 seconds to increase or decrease the track number.
- Tilt up/down for more than 1.5 seconds to increase or decrease the folder number.

Bluetooth® Audio

- Tilt up/down for less than 1.5 seconds to increase or decrease the track number.

(back) switch

Press the (back) switch to return to the previous screen or cancel the current selection.

NOTE:
You are unable to operate the display of the NissanConnect℠ using the buttons on the steering switch whenever the meter shows the setting display.

ANTENNA

The antenna cannot be shortened, but can be removed. When you need to remove the antenna, turn the antenna rod counterclockwise.

To install the antenna rod, turn the antenna rod clockwise and hand tighten.

CAUTION

- **Always properly tighten the antenna rod during installation or the antenna rod may break during vehicle operation.**
- **Be sure that the antenna is removed before the vehicle enters an automatic car wash.**

Window antenna

The antenna pattern is printed inside the rear window.

CAUTION

- **Do not place metalized film near the rear window glass or attach any metal parts to it. This may cause poor reception or noise.**
- **When cleaning the inside of the rear window, be careful not to scratch or damage the rear window antenna. Lightly wipe along the antenna with a dampened soft cloth.**

AUDIO MAIN OPERATION

Turning audio system on/off

The ignition switch must be in the ACC or ON position to turn on the audio system. Push the **ON•OFF** button on the steering wheel to turn on the last audio source which was playing immediately before the system was turned off. To turn off the audio system, push the **ON•OFF** button on the steering wheel again.

Displaying Audio screen

Push the **AUDIO** button on the control panel to display the current audio screen.

Selecting audio source

1. Turn on the audio source menu screen by touching the “Source” key on the upper left corner of the audio screen.
2. Select an item from the audio source menu screen.

- Pushing the **RADIO**, **DISC**, **MEDIA** or **SOURCE** button on the steering switch can also change the audio source. For additional information, refer to “Names and functions of audio control buttons” in this section.
- If the audio system has been turned off while one of the audio sources was playing, turning the audio system back on will play the audio source that was playing when the system was turned off.
- The audio source can also be changed with the source bar on top of the audio screen.

Audio source bar

The audio source can be changed with the source bar on top of the audio screen. The source bar display can be turned on/off.

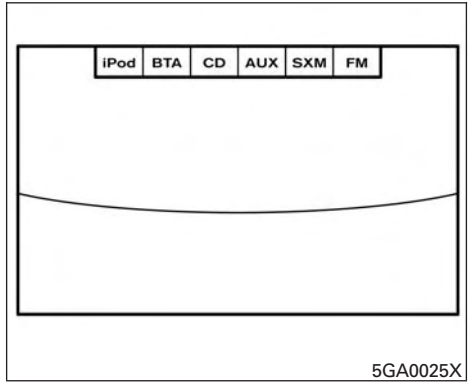

Turning source bar on/off

You can select whether the source bar on top of the audio screens is displayed or not.

1. Touch the “Source” key on the upper left corner of the audio screen.
2. Touch the “Show Source Bar” key to turn the indicator on/off.

Editing source bar

The audio sources to be displayed on the source bar can be changed.

1. Touch the “Source” key on the upper left corner of the audio screen.
2. Touch the “Edit Source Bar” key.
3. Touch one of the keys on the source bar and then touch one of the audio sources from the source list to register the audio source in the source bar.

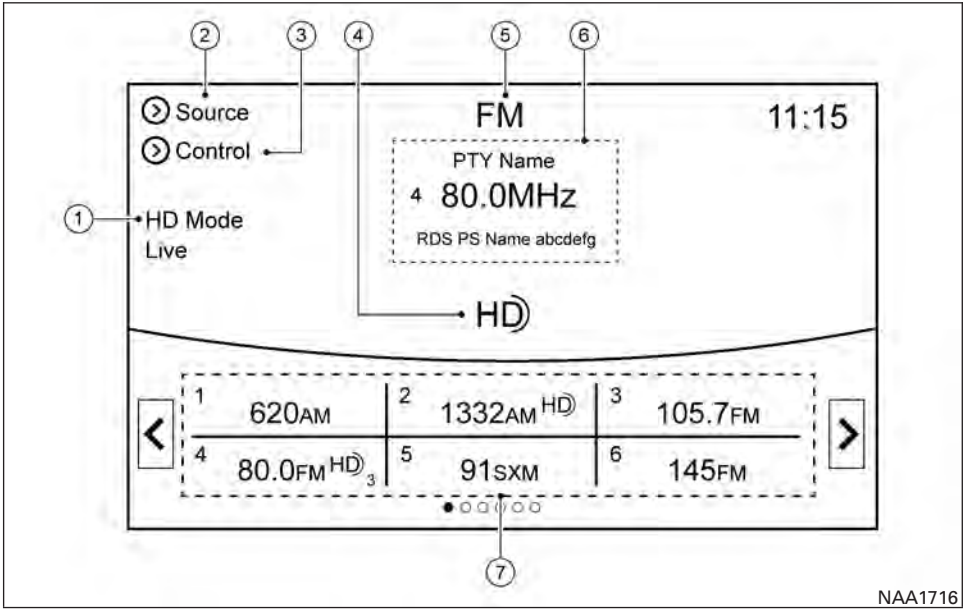

RADIO

How to view radio operation screen

***For models with radio status indicator and reception information display.**

The radio screen can be viewed and operated on the display.

① Radio mode indicator: The current radio mode is displayed.

② "Source" key: Touch to switch to the source select screen. For additional information, refer to "Selecting audio source" in this section.

③ "Control" key: Touch to display the control screen. For additional information, refer to "Radio controls" in this section.

④ HD Radio reception status indicator (for AM and FM):

The icon is displayed when the HD Radio digital signal is received. The icon flashes when the radio is acquiring the digital signal but the sound output is not yet in the HD mode.

⑤ Radio band indicator: The currently selected radio band (AM, FM or SXM) is displayed.

⑥ Reception information display: Reception information available at the time such as frequency, station/channel name, etc. are displayed.

On the SXM screen, touch the area to display the category list.

⑦ 36 stations/channels can be registered in the preset list.

For additional information, refer to "Presetting" in this section.

NOTE:

HD Radio reception needs to be activated to receive HD Radio broadcasts. This enables you to receive radio broadcasts digitally (where available), providing a better quality sound with clear reception. When this feature is not activated or HD Radio broadcasts are not available, you will receive analog radio (AM/FM broadcasts).

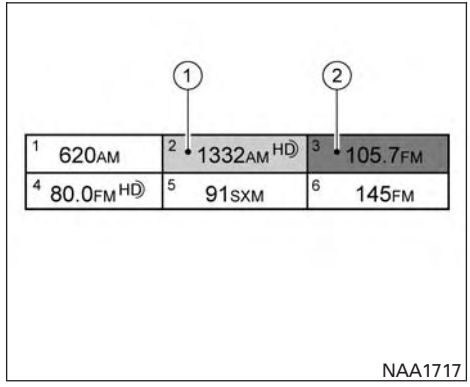

Radio source control

There are 2 elements used in the preset list area that are associated with radio source:

① Highlight for multi-function controller operation.

② (With triangle) Indicator of current selected preset station.

Radio operation

Radio activation and band selection

Push the RADIO button or select the preferred radio band (AM, FM or SXM) from the audio source list to turn on the radio. Each time the RADIO button is pushed, the radio band will change. For additional information, refer to “Selecting audio source” in this section.

NOTE:

When the stereo broadcast signal is weak, the radio will automatically change from stereo to monaural reception.

Seeking stations/channels

AM and FM radio

Push the SEEK•CAT button or TRACK button to tune from low to high or high to low frequencies and to stop at the next broadcasting station.

SiriusXM Satellite Radio

Push the SEEK•CAT button or TRACK button to tune to the first channel of the next or previous category.

Scan tuning

To tune the stations/channels, touch the “Control” key on the display and touch the “Scan” key. The stations will be turned from low to high frequencies and stop at each broadcasting station for 5 seconds. Touching the “Scan” key again during this 5 second period will stop scan tuning and the radio will remain tuned to that station.

Pushing the SCAN button can also scan tune.

Presetting

Up to 36 stations/channels can be registered for AM, FM or SXM in the preset list.

1. Select a radio band (AM, FM or SXM)
2. Tune to the station/channel you wish to store in the preset list.
3. Touch and hold one of the preset numbers in the preset list.

NOTE:

Only 1 to 6 can store using radio memory buttons.

Push and hold the desired station/channel preset button (1 – 6).

4. The information such as frequency (AM/FM), channel number (SXM), etc. will be displayed on the preset list.

To change the preset station/channel, touch and hold one of the preset numbers. You can select whether to change the station/channel or to delete the preset setting.

Alert notification (SXM only)

Favorite artists and songs can be registered to receive an alert notice when a song of the registered conditions is on the radio. To tune to the respective channel, touch the "Listen to be consistent" key. The alert can be ignored by touching the "Cancel" key.

Satellite Radio:

- The satellite mode requires an active SiriusXM Satellite Radio subscription. The satellite service is available only to those at least 18 and older in the 48 contiguous United States.
- It may take some time to receive the activation signal after the initiation of the SiriusXM Satellite Radio subscription. After receiving the activation signal, an available channel list will automatically be updated in the radio. Switch the Ignition switch from LOCK to ACC to update the SiriusXM channel list.

Radio controls

Touch the "Control" key on the AM, FM or SXM screen to display the control screen.

The following items are available:

FM/AM

- "Station list" key

  Touch to display the available station list.

  While listening to FM radio, Auto Update is not preformed.

- "Scan" key

  Touch to scan tune the stations. For additional information, refer to "Radio operation" in this section.

- "HD radio mode" key

  When this item is turned on, the analog and the digital reception switches automatically. When this item is turned off, the reception is fixed in the analog mode.

- "HD radio Info" key

  Touch to display the HD Radio Information such as name of song, artist and album.

  This item is available when "RDS-Info" key is not active.

- "Tag" key (HD Radio Broadcasts only)

  Touch to register the tag information for ITunes® Tagging. If an iPod® is plugged in after the registration, the tag information can be stored in an iPod® and be used to purchase the song via ITunes.

- "RDS-Info" key (FM only)

  Touch to display the RDS information.

  This item is available only when the "HD Radio Info" key is not active.

SXM

- “Categories” key

  Touch to display the categories list.

- “Direct Tune” key

  Touch to display the keypad to enter the frequency and directly tune to the channel.

- “Scan” key

  Touch to scan tune the channels.

  For additional information refer to, “Radio operation” in this section.

- “Instant replay” key

  Up to 30 minutes of the broadcast of the channel that has been tuned in to can be replayed.

  Touch to select from ▶ , ⏸ , ▶▶ , ▶| and |◀ .

- “Tag” key

  Touch to register the tag information for iTunes® tagging. If an iPod® is plugged in after the registration, the tag information can be stored in an iPod® and be used to purchase the song via ITunes®.

- “Other” key — “Favorite Artists” key

  Touch to set a favorite artists alert notification. Up to 8 artists can be registered. While a song of your favorite artists is playing, touch the list and touch the “Add/Update” key. To receive the alert notification, select the “Notify Alert ON” key.

- “Other” key — “Favorite Songs” key

  Touch to set a favorite songs alert notification. Up to 8 songs can be registered. While a song of your favorite artists is playing, touch the list and touch the “Add/Update” key. To receive the alert notification, select the “Notify Alert ON” key.

- “Other” key — “Customize Channel List” key

  Touch to customize the channel list. Only selected channels will be tuned in when you seek or scan the channels. You can select each item or touch the “Select/Deselect All” key.

- “Other” key — “Favorite Artists Now Playing” key

  Touch to display the artist list for an alert notice.

- “Other” key — “Favorite Songs Now Playing” key

  Touch to display the song list for an alert notice.

- “Other” key — “Favorite Alert Settings” key

  Touch to turn on/off the alert notice for the registered favorite artists and songs.

- “Other” key — “Channel Locking Settings” key

  Touch to select or unselect the channel that you wish to lock out. A passcode is required to change the settings. The default passcode is 1234.

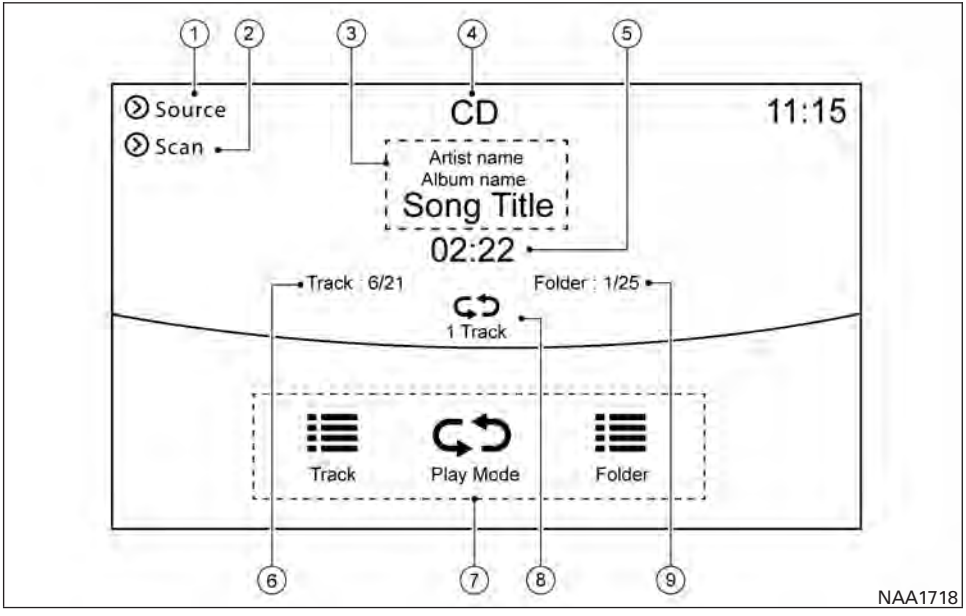

COMPACT DISC (CD) PLAYER

How to view CD operation screen

① "Source" key
Touch to switch to the source list screen. For additional information, refer to "Selecting audio source" in this section.

② "Scan" key
Touch to play the first 10 seconds of the tracks. Touch again to stop scanning.

③ Track information
Track information such as the song title, artist name, and album name is displayed.

④ Audio source indicator
Indicates that CD is currently selected.

⑤ Play time
The play time of the track is displayed.

⑥ Track number
This indicates the current track number and the total number of tracks.

⑦ CD menu
CD menu items are displayed. Touch an icon to display the list or to change the setting.

- "Track" key
- "Folder" key (for MP3, WMA, AAC)
- "Play Mode" key

⑧ Play Mode indicator
This indicates the current play mode. Touch to change the play mode.

⑨ Folder number (for MP3, WMA, AAC)
This indicates the folder number when a CD with compressed audio files is loaded.

For CDs without compressed audio files

Mode	Screen display
Disc Repeat	Disc
1 Track Repeat	1 Track
Disc Random	Disc

For CDs with compressed audio files

Mode	Screen display
Disc Repeat	Disc
1 Folder Repeat	1 Folder
1 Track Repeat	1 Track
Disc Random	Disc
1 Folder Random	1 Folder

CD player operation

Loading
Insert the CD into the slot with the label side facing up. The CD will be guided automatically into the slot and starts playing.

After loading the CD, the CD screen will appear on the display.

Activation and playing
The CD mode can be selected from the source list or by pushing the DISC button with a CD loaded to play the CD. For additional information, refer to “Selecting audio source” and “Main audio buttons” in this section.

If the system has been turned off while the CD was playing, pushing the VOL/ON▪OFF button will start the Audio system set to the CD screen.

Selecting track/folder
Touch the “Track” key or “Folder” key in the CD menu and select a preferred track or folder from the list.

Push the SEEK▪CAT button or TRACK button to move to the next or previous track.

For CDs with compressed audio files, turn the TUNE/FOLDER AUDIO button to move to the next or previous folder. For additional information, refer to “Main audio buttons” in this section.

Fast-forwarding
Push and hold the TRACK button to fast-forward the track. Release the TRACK button to play the track at normal speed.

Scanning
Touch the “Scan” key on the display or push the SCAN button to scan the tracks in the CD. While scanning, the CD will play the first 10 seconds of each track and move on to the next track. Pushing the “Scan” key again within the 10 seconds will stop scanning.

Changing play mode
Touch the “Play Mode” key or the play mode icon or to select the play mode.

Pushing the RPT RDM button can also change the play mode.

Ejecting CD
Push the button to eject the CD. If the CD is ejected and left unremoved, it will be reloaded into the slot to protect the CD.

USB (Universal Serial Bus) CONNECTION PORT

Connecting USB memory device

WARNING

Do not connect, disconnect or operate the USB device while driving. Doing so can be a distraction. If distracted, you could lose control of your vehicle and cause an accident or serious injury.

CAUTION

- **Do not force the USB device into the USB port. Inserting the USB device tilted or upside down into the port may damage the port. Make sure that the USB device is connected correctly to the USB port.**

- **Do not grab the USB port cover (if so equipped) when pulling the USB device out of the port. This could damage the port and the cover.**
- **Do not leave the USB cable in a place where it can be pulled unintentionally. Pulling the cable may damage the port.**

Refer to your device manufacturer's owner information regarding the proper use and care of the device.

Two USB connection ports are located on the center console box. For additional information, refer to "USB/iPod® connection port" in this section.

When compatible storage devices are plugged into the jack, compatible audio files on the storage devices can be played through the vehicle's audio system.

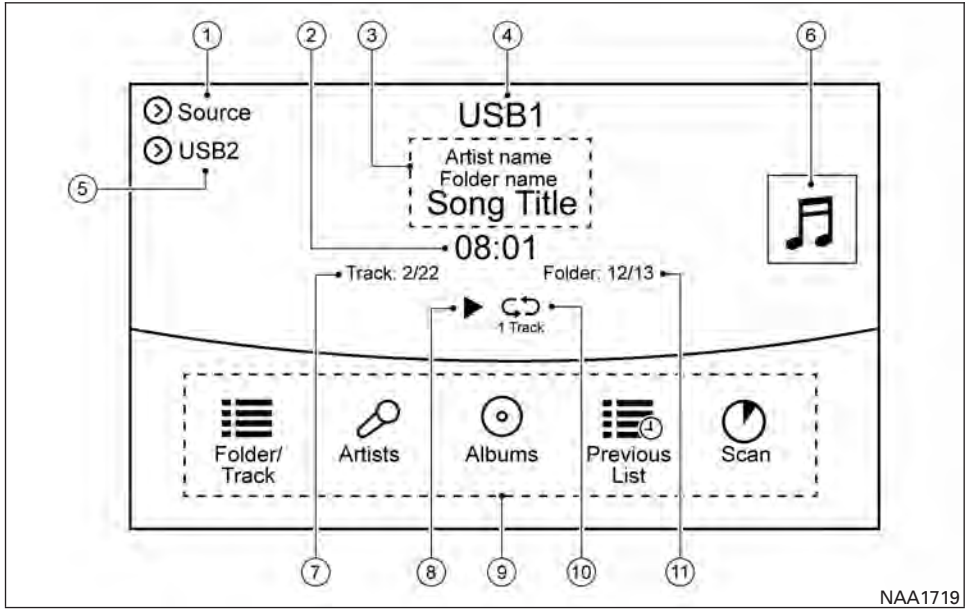

How to view USB operation screen

① "Source" key
Touch to switch to the source list screen. For additional information, refer to "Selecting audio source" in this section.

② Play time
The play time of the track is displayed.

③ Track information
Track information such as the song title, artist name and folder name is displayed.

④ Audio source indicator
Indicates which of the two USB memory devices is selected.

⑤ “USB1” key/“USB2” key
Touch to switch to the other connected USB memory device.

⑥ Album artwork (if so equipped)
An image of the CD cover is displayed when available.

⑦ Track number
This indicates the track number and the total number of tracks.

⑧ “ ▶ ” key/“ II ” key
Touch to play or pause the track.

⑨ USB menu
USB menu items are displayed. Touch an icon to display the list or to change the setting.

- “Folder/Track” key
- “Artists” key
- “Albums” key
- “Previous List” key
- “Scan” key
- “Play Mode” key

⑩ Play mode indicator
This indicates the current play mode. Touch to change the play mode.

Mode	Screen display
All Track Repeat	All
1 Folder Repeat	1 Folder
1 Track Repeat	1 Track
All Random	All
1 Folder Random	1 Folder

⑪ Folder number
This indicates the folder, artist or album number and the total number of folders/lists.

USB memory device player operation

Activation and playing

USB memory device mode can also be activated from the audio source list and the audio source bar by the touch panel operation or by pushing the MEDIA button. For additional information, refer to “Selecting audio source” and “Main audio buttons” in this section.

To play the USB memory device, touch the “ ▶ ” key and, to pause the USB memory, touch the “ II ” key on the USB operation screen.

Selecting play list

Select a play list by touching an icon on the USB menu.

- Folder/Track (List)
- Artist (List)
- Album (List)
- Previous (List)

Skipping tracks/folders

Push the SEEK•CAT button or TRACK button to skip to the next or previous track.

To skip to the next or previous folder, turn the TUNE/FOLDER AUDIO button.

Fast-forwarding

Push and hold the TRACK button to fast-forward the track. Release the TRACK button to play the track at normal speed.

Scanning

Touch the “Scan” key on the display or push the SCAN button to scan the tracks in the USB memory device. While scanning, the USB memory device will play the first 10 seconds of each track and move on to the next track. Touching the “Scan” key again within the 10 seconds will stop scanning.

Changing play mode
Touch the "Play Mode" key on the display to select the play mode.

Only one of the two connected USB memory devices can be operated by the voice recognition system.

iPod® PLAYER

Connecting iPod®

⚠WARNING

Do not connect, disconnect or operate the iPod® while driving. Doing so can be a distraction. If distracted, you could lose control of your vehicle and cause an accident or serious injury.

⚠CAUTION

- **Do not force the iPod® device into the USB port. Inserting the iPod® cable tilted or upside down into the port may damage the port. Make sure that the iPod® cable is connected correctly to the USB port.**
- **Do not grab the USB port cover (if so equipped) when pulling the iPod® cable out of the port. This could damage the port and the cover.**
- **Do not leave the iPod® cable in a place where it can be pulled unintentionally. Pulling the cable may damage the port.**

Refer to your device manufacturer's owner information regarding the proper use and care of the device.

Two USB (iPod®) connection ports are located on the center console box. For additional information, refer to "USB/iPod® connection port" in this section.

The battery of the iPod® will be charged while the device is connected to the vehicle if the iPod® supports USB connection charging.

Depending on the model and firmware version of the iPod®, the display on the iPod® shows a NISSAN or Accessory Attached screen when the connection is completed. When the iPod® is connected to the vehicle, the iPod® music library can only be operated using the vehicle audio controls.

Compatibility:
Made for

- iPod touch® (5th generation)
- iPod touch® (4th generation)
- iPod touch® (3rd generation)
- iPod touch® (2nd generation)
- iPod touch® (1st generation)
- iPod touch®
- iPod® with video
- iPod classic®
- iPod nano® (7th generation)
- iPod nano® (6th generation)
- iPod nano® (5th generation)
- iPod nano® (4th generation)
- iPod nano® (3rd generation)
- iPod nano® (2nd generation)
- iPod nano® (1st generation)
- iPhone® 5S
- iPhone® 5
- iPhone® 4S
- iPhone® 4
- iPhone® 3GS
- iPhone® 3G
- iPhone®

The iPod touch® may not respond quickly with the system in some cases.

Make sure that the iPod® firmware is updated.

The Lightning™ connector works with iPhone® 5, iPhone® 5S, iPod touch® (5th generation) and iPod nano® (7th generation).

The 30–pin connector works with iPhone® 4S, iPhone® 4, iPhone® 3GS, iPhone® 3G, iPhone®, iPod touch® (1st through 4th generation), iPod classic® and iPod nano® (1st through 6th generation).

USB works with iPhone® 5, iPhone® 4S, iPhone® 4, iPhone® 3GS, iPhone® 3G, iPhone®, iPod touch® (1st through 5th generation), iPod classic® and iPod nano® (1st through 7th generation).

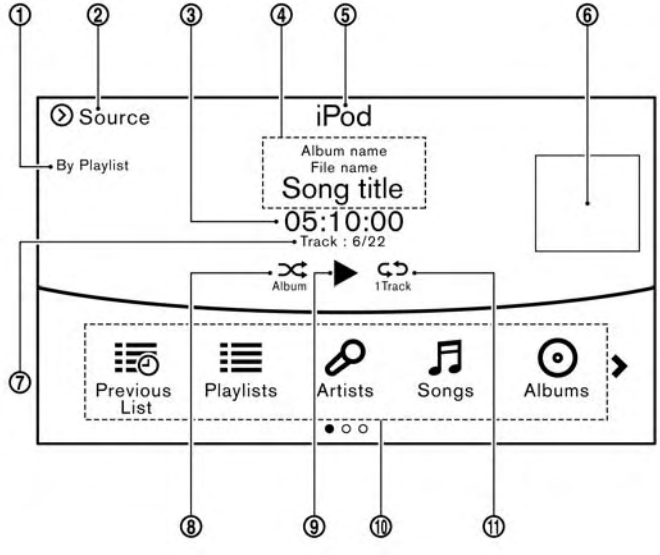

NAA1633

How to view iPod® operation screen

① Search condition indicator
This indicates the current search condition.

② "Source" key
Touch to switch to the source list screen. For additional information, refer to "Selecting audio source" in this section.

③ Play time
The play time of the track is displayed.

④ Track information
Track information such as the song title, artist name and album name is displayed.

⑤ Audio source indicator
This indicates that the iPod® is currently selected.

⑥ Album artwork (if so equipped)
An image of the album artwork is displayed when available.

⑦ Track number
This indicates the current track number and the total number of tracks.

⑧ Shuffle mode indicator
Touch to change the shuffle mode.

Mode	Screen display
Shuffle albums	Albums
All songs	Songs
Shuffle Off	Off

⑨ " ▶ " key/ " II " key
Touch to play or pause the track.

⑩ iPod® menu

- "Previous List" key
- "Playlists" key
- "Artists" key
- "Songs" key
- "Albums" key
- "Genres" key
- "Composers" key
- "Podcasts" key
- "Audiobooks" key
- "Shuffle" key
- "Repeat" key

⑪ Repeat mode indicator
Touch to change the repeat mode.

Mode	Screen display
All Track Repeat	All
1 Track Repeat	1 Track
Repeat Off	Off

iPod® player operation

Activation and playing
Inserting the iPod® cable into the connection port will activate the iPod® mode.

iPod® can also be selected from the audio sources list and the source bar by touch panel operation or by pushing the MEDIA button. For additional information, refer to "Selecting audio source" and "Main audio buttons" in this section.

To play and pause the iPod®touch the "Key/Pause" key in the, iPod® menu.

Selecting search method
A list of search methods is displayed in the iPod®menu. Touch and select an item to play the iPod® in your preferred settings.

Fast-forwarding
Push and hold the TRACK button to fast-forward the song. Release the TRACK button to play the song at normal speed.

Changing play mode
Touch "Shuffle" key or "Repeat" key from the iPod® menu to select the play mode.

Skipping songs:
Push the SEEK•CAT button or TRACK button to skip to the next or previous song.

Even when iPod®s or iPhone®s are inserted into both of the two USB connection ports, the system recognizes only one of the connected iPod®s or iPhone®s at a time.

BLUETOOTH® STREAMING AUDIO

Your vehicle is equipped with Bluetooth® streaming audio.

If you have a compatible Bluetooth® device with streaming audio (A2DP profile), you can set up a wireless connection between your Bluetooth® device and the in-vehicle audio system. This connection allows you to listen to the audio from the Bluetooth® device using your vehicle speakers. It may also allow basic control of the device for playing and skipping audio files using the AVRCP Bluetooth® profile. Not all Bluetooth® devices have the same level of controls for AVRCP. Please consult the manual for your Bluetooth® device for more details.

Wireless LAN (Wi-Fi) and the Bluetooth® functions share the same frequency band (2.4 GHz). Using the Bluetooth® and the wireless LAN functions at the same time may slow down or disconnect the communication and cause undesired noise. It is recommended that you turn off the wireless LAN (Wi-Fi) when using the Bluetooth® functions.

Connecting Bluetooth® streaming audio device

Bluetooth® streaming audio device must be connected to the vehicle before operation. For additional information, refer to “Connecting Bluetooth® device” in this section.

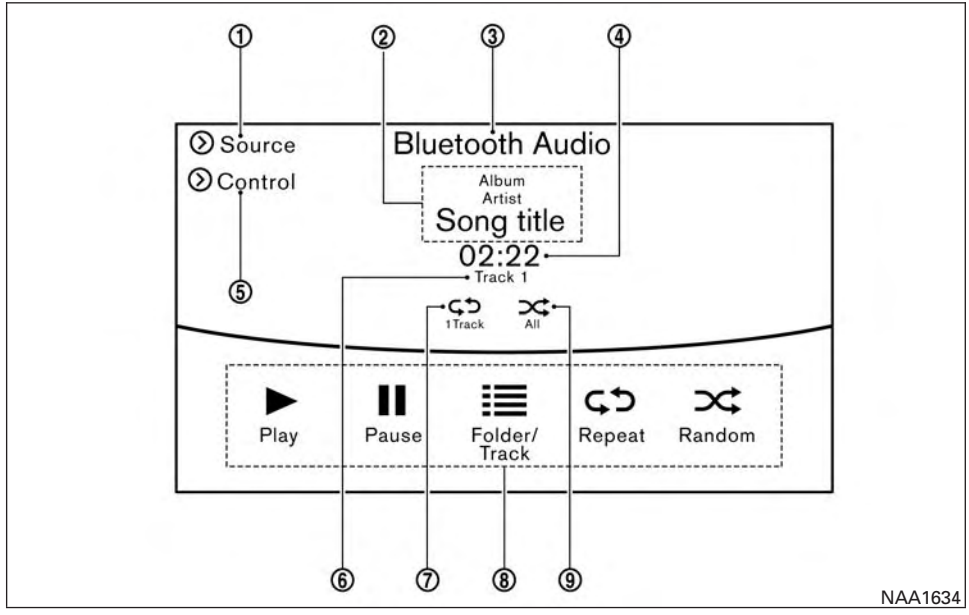

How to view Bluetooth® streaming audio operation screen

① “Source” key
Touch to switch to the source list screen. For additional information, refer to “Selecting audio source” in this section.

② Track information
Track information such as the song title, artist name and folder name is displayed.

③ Audio source indicator
This indicates that Bluetooth® streaming audio is currently selected among other sources.

④ Play time
The play time of the track is displayed.

⑤ “Control” key
Touch to display the control screen. For additional information, refer to “Bluetooth® streaming audio operation” in this section.

⑥ Track number
This indicates the track number.

⑦ Repeat mode indicator
Touch to change the repeat mode.

Mode	Screen display
All Repeat	All
1 Folder Repeat	1 Folder
1 Track Repeat	1 Track
Repeat Off	Off

⑧ Bluetooth® streaming audio menu

- “Play” key
- “Pause” key
- “Folder/Track” key
- “Repeat” key
- “Random” key

⑨ Random mode indicator
Touch to change the random mode.

Mode	Screen display
All Random	All
1 Folder Random	1 Folder
Random Off	OFF

Depending on the audio device that is connected to the vehicle, track information may not be displayed.

Bluetooth® streaming audio operation

The ability to pause, change tracks, fast-forward, rewind, randomize and repeat music may be different between devices. Some or all of these functions may not be supported on each device.

- Depending on the Bluetooth® streaming audio device that is connected, it may not be possible to perform audio operations.
- Depending on the Bluetooth® streaming audio device that is connected, a time lag may occur before music is played back.
- Depending on the application except for the native audio application that is played on the Bluetooth® streaming audio device, incorrect behavior (information lacking, timer skipping, etc.) may occur.

Activation and playing

Bluetooth® streaming audio device can be selected from the audio sources list by touching the “Source” key or by pushing the MEDIA button. For additional information, refer to “Selecting audio source” and “Main audio buttons” in this section.

To play the Bluetooth® streaming audio device, touch the “Play” key and to pause the Bluetooth® streaming audio device, touch the “Pause” key in the Bluetooth® streaming audio menu.

Selecting folder/track

Touch the “Folder/Track” key to select a folder/track.

Changing play mode

Touch the “Repeat” key or “Random” key in the Bluetooth® streaming audio menu to change the play mode.

Fast-forwarding

Push and hold the TRACK button to fast-forward the song. Release the TRACK button to play the song at normal speed.

Skipping songs/folders

Push the SEEK•CAT button or TRACK button to skip to the next or previous song.

To skip to the next or previous folder, turn the TUNE/FOLDER AUDIO button.

Bluetooth® streaming audio controls

Touch the “Control” key on the Bluetooth® Audio operation screen to display the control screen.

Select Audio Device	Touch to select a different Bluetooth® streaming audio device from a list of registered Bluetooth® devices. For additional information, refer to “Bluetooth® settings” in this section.
Connect Device	Touch to connect a new Bluetooth® device.

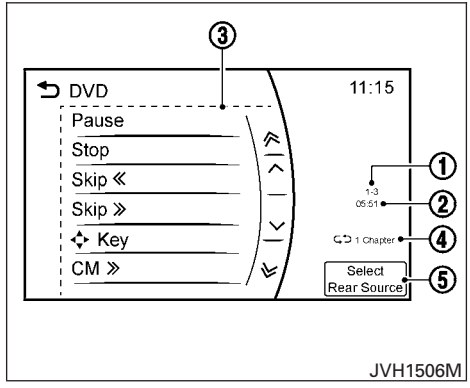

DIGITAL VERSATILE DISC (DVD) PLAYER

Touch-screen display

① Title/chapter number:
This indicates the DVD title/chapter number currently selected.

② Play time:
The play time of the track is displayed.

③ DVD operation menu:
DVD menu items are displayed. Touch a key to operate the DVD.

- “Play/Pause” key
- “Stop” key
- “Skip <<” key
- “Skip >>” key
- “◀▲▼▶ ” key
- “CM <<” key
- “CM >>” key
- “Top Menu” key
- “Title List” key
- “Title Menu” key
- “10 Key Search” key
- “Select No.” key
- “Previous Title” key
- “Next Title” key
- “Default Position” key
- “Display Settings” key
- “Play Mode” key

④ Play mode indicator
This indicates the current play mode.

⑤ “Select Rear Source” key (if so equipped)
The select rear source screen is displayed. For additional information, refer to “Controlling the rear system on the front display” in this section.

Mode	Screen display
1 Disc Repeat	Disc
1 Chapter Repeat	1 Chapter

- The DVD menu list will appear when the screen is touched while a movie is playing.
- The availability of the DVD menu items depend on the type of DVD.

DVD player operation

Precautions

- Use DVDs with the region code “ALL” or the code applicable to the DVD player. (The region code is displayed as a small symbol printed on the top of the DVD). This vehicle-installed DVD player can only play DVDs with the applicable region code.
- Images cannot be displayed when the ignition switch is in the ON position.
- Some VIDEO-CD functions may not be supported with this system.
- Displaying items may vary depending on the type of disc.

Loading

Insert the DVD into the slot with the label side facing up. The DVD will be guided automatically into the slot and start playback.

When a DVD is loaded, the DVD operation screen is displayed on the display.

Activation and playing

Inserting the DVD into the slot will activate the DVD mode. The DVD mode can also be selected from the source list by pushing the DISC button with a DVD loaded. For additional information, refer to “Selecting audio source” and “Main audio buttons” in this section.

Touch the “Play” key in the DVD menu to start playing. Touch the “Pause” key to pause and touch the “Stop” key to stop playing the DVD.

Skipping

Touch the “Skip <<” key or “Skip >>” key in the DVD menu to skip to the next or previous track/chapter.

Displaying keys

Touch the “Key” key in the DVD menu to display operation keys such as the “Enter” key or “Return” key, etc.on the display.

Skipping commercial messages

Touch the “CM <<” key or “CM >>” key in the DVD menu to skip commercials.

Displaying top menu

Touch the “Top Menu” key in the DVD menu to display the top menu specific to each disc. For additional information, refer to the disc instructions.

Displaying title list

Touch the “Title List” key in the DVD menu to display the title list.

Displaying title menu

Touch the “Title Menu” key in the DVD menu to display the title menu specific to each disc. For additional information, refer to the disc instructions.

Selecting track/chapter

Touch the “10 Key Search” key in the DVD menu to display the keyboard screen. Enter the track/chapter you wish to play.

Selecting track/chapter/menu number

Touch the “10 Key Search” key or “Select No.” key in the DVD menu to display the keyboard screen. Enter the track/chapter or menu number you wish to play.

Viewing from default list

Touch the “Default Position” key in the DVD menu to view from the default list.

Adjusting the display

Touch the “Display Settings” key in the DVD menu to adjust the display settings of the display.

Brightness	Adjusts the display brightness
Contrast	Adjusts the display contrast
Black Level	Adjusts the display black level
Tint	Adjusts the tint level
Color	Adjusts the color
Reset Settings	Resets all the display settings to default

AUXILIARY (AUX) DEVICES

Connecting auxiliary devices

The auxiliary input jacks are located in the center console box.

The auxiliary audio input jack accepts any standard analog audio input such as from a portable cassette player, CD player or MP3 player.

A video player can be connected to the auxiliary video input jack to play movies.

INFO:

Insert a 1/8 in (3.5 mm) stereo mini plug in the audio input jack. If a cable with a mono plug is used, the audio output may not function normally.

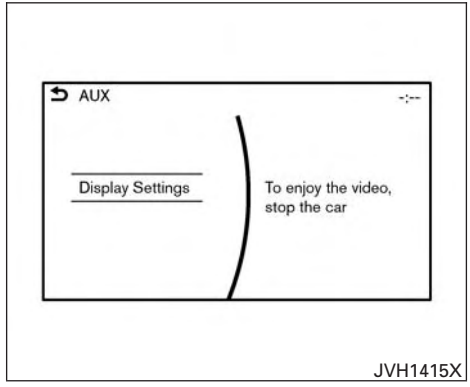

How to view AUX screen

Touch the “Display Settings” key to adjust the display settings on the upper display.

AUX operation

Activation and playing:

Turn on an AUX device.

Connecting an AUX device into the jack will activate the AUX mode.

AUX can be selected from the other audio sources by touching the “Source” key or by pushing the “MEDIA” button.

INFO:

Movies are displayed on the upper display while the audio information is displayed on the lower display.

MOBILE ENTERTAINMENT SYSTEM (MES) (if so equipped)

If your vehicle is equipped with the Mobile Entertainment System, you can enjoy playing audio and movie files on the rear displays with images and sound.

A DVD and an AUX device inserted/connected to the audio system for the front seat audio unit as well as the devices connected to the rear media interface (USB and HDMI ports for the rear displays) can be played on the rear displays.

The front and left/right rear displays can show different sources individually.

CD/DVD slot is on the instrument panel. For additional information, refer to “Names and functions of audio control buttons” in this section.

AUX jacks are located inside the center console box.

The rear media interface (USB and HDMI connection ports) is located behind the center console box. For additional information, refer to “Connecting rear media interface” in this section.

⚠ WARNING

The driver must not attempt to operate the Mobile Entertainment System while driving so full attention may be given to vehicle operation.

⚠ CAUTION

- **Do not attempt to use the system in extremely high or low temperature conditions [below -4°F (-20°C) or above 158°F (70°C)].**
- **To avoid draining the vehicle battery (12V battery), do not operate the system for more that 15 minutes without starting the engine.**

The front display is designed not to show images during driving, as the driver’s attention must be given to vehicle operation for safety. Sounds are still audible. To show images on the front display, stop the vehicle in a safe location, move the shift lever to the “P” (Park) position and apply the parking brake.

PRECAUTIONS

Start the engine when using the Mobile Entertainment System.

⚠ WARNING

The driver must not attempt to operate the Mobile Entertainment System or wear the headphones while the vehicle is in motion so that full attention may be given to vehicle operation.

Park the vehicle in a safe location and apply the parking break to view the images on the front center display screen using the DVD player.

⚠ CAUTION

- **Only operate the Mobile Entertainment System while the engine is running. Operating the Mobile Entertainment System for extended periods of time with the engine turned off can discharge the vehicle battery (12V battery).**
- **Do not allow the system to get wet. Excessive moisture such as spilled liquids may cause the system to malfunction.**
- **While playing VIDEO-CD media, this DVD player does not guarantee complete functionality of all VIDEO-CD formats.**

TECHNICAL INFORMATION
USB media support

Supported USB media

USB 1.1	Low Speed (1.5 Mbps), Full Speed (12 Mbps)
USB 2.0	Low Speed (1.5 Mbps), Full Speed (12 Mbps), High Speed (480 Mbps)

Mass Storage Support

The Mobile Entertainment System recognizes the connected USB media as a mass storage device.

Supported file systems and partition

The first partition of the following file systems are supported.

- NTFS
- FAT32
- FAT16
- HFS+

Supported folder structure

Folders	1,000 folders maximum
Files	10, 000 files maximum
Pass length	3072 characters
Full name length	232 characters
Folder levels	11 levels maximum (when route is regarded as level 0)

Supported format and decode

Video codec

Codec	Profile	Maximum Resolution/Frame Rate	Notes
DivX	DivX 3.11/4/5/6	SD (720 x 576)/30	Only single-instance playback is supported for DivX 3.11.
Flash	-	1080 p/30	-
H.263	-	1080 p/30	-
H.264	BP/MP/HP	1080 p/30	Extended file not supported.
MPEG-1	-	1080 p/30	-
MPEG-2	MP@ML	1080 p/30	-
MPEG-4	SP/ASP	1080 p/30	-
Real Video	RV8/9/10	1080 p/30	-
XviD	-	SD (720 x 576)/30	-
WMV7/8	-	D1/30	HD version not provided. Only single instance playback is supported for WMV7/8
WMV9/VC-1	SP/MP/AP	1080 p/30	Complex Profile not supported.

Audio codec

Codec	Supported Bitrates	Sampling Frequency	Channels	Codec Features Supported
AAC (MPEG4 AAC-LC)	8 kbps - 320 kbps	8, 11.025, 16, 22.05, 24, 32, 44.1, 48 KHz	Mono/Stereo/ 5.1 -> Stereo Downmixing	- Complies with ISO/IEC 13818-7 - ADTS/ADIF Output - Modes: Mono, Stereo, Dual Mono, Joint Stereo (Intensity Stereo (IS) and Mid-side Stereo (MS)) - All tools of 13818-7 LC + PNS supported - CRC check supported - Header formats: AAC, ADIF, ADTS
AAC+ (ENHANCED AAC+)	Up to 264 kbps	Up to 48 KHz	Mono/Stereo	- Modes: Mono, Stereo, Dual Mono - Header formats: ADIF, ADTS
Linear PCM	-	Up to 48 KHz	Stereo	Max 16bit only
RealAudio (3, 6, 9, 10)	6 to 96 kbps	8, 11.025, 22.05, 44.1 KHz	Mono/Stereo	Downmixing is not supported.
Dolby Digital	64 to 640 kbps	48 KHz	Mono/Stereo/ 5.1 -> Stereo Downmixing	Modes: Mono, Stereo, 5.1 -> Stereo Downmixing
MP3	32 to 320 kbps (MPEG-1 Layer 1,2,3) 8 to 160 kbps (MPEG-2 Layer 1,2,3)	8/11.025/12 KHz (MPEG-2.5) 16/22.05 /24 KHz (MPEG-2) 32/44.1/48 KHz (MPEG-1)	Mono/Stereo	- Complies with ISO 11172-3 and ISO 13818-3 - Modes: Mono, Stereo, Dual Mono, Joint Stereo (Intensity Stereo (IS) and Mid-side Stereo (MS)) - CRC check supported
OGG Vorbis	Up to 128 kbps	8 to 48 KHz	Mono/Stereo	-
WMA v9 (std) WMA v10 (std)	Up to 384 kbps	Up to 48 KHz	Mono/Stereo	- Decodes WMA streams generated using encoder v2, v7, v8, v9, v10 content. - Supports all L1, L2, and L3 profiles.

Depending on the combination of video codec, audio codec, and format, some files cannot be played with the Mobile Entertainment System.

Combinations of video/audio codecs and playable file extensions

Video	Audio Codec	Extenstion
H.263	AAC	“.3gp”, “.3g2”
H.264	AAC	“.avi”, “.3gp”, “.3g2”, “.mp4”, “.m4v”, “.divx”, “.mov”
	AAC+	“.avi”, “.3gp”, “.3g2”, “.mp4”, “.m4v”, “.divx”, “.mov”
	Linear PCM	“.avi”, “.divx”
	Dolby Digital	“.avi”, “.mp4”, “.m4v”, “.divx”, “.mov”, “.m2ts”, “.mts”
	MP3	“.avi”, “.flv”, “.mp4”, “.m4v”, “.divx”, “.mov”
	WMA	“.avi”, “.divx”
Divx	AAC	“.avi”, “.divx”
	Linear PCM	“.avi”, “.divx”
	Dolby Digital	“.avi”, “.divx”
	MP3	“.avi”, “.divx”
	WMA	“.avi”, “.divx”
XviD	AAC	“.avi”, “.mp4”, “.m4v”, “.divx”, “.mov”
	AAC+	“.avi”, “.mp4”, “.m4v”, “.divx”, “.mov”
	Linear PCM	“.avi”, “.divx”
	Dolby Digital	“.avi”, “.mp4”, “.m4v”, “.divx”, “.mov”
	MP3	“.avi”, “.mp4”, “.m4v”, “.divx”, “.mov”
	WMA	“.avi”, “.divx”
MPEG-1	AAC	“.avi”, “.mp4”, “.m4v”, “.divx”, “.mov”
	AAC+	“.avi”, “.mp4”, “.m4v”, “.divx”, “.mov”
	Linear PCM	“.avi”, “.divx”
	Dolby Digital	“.avi”, “.mp4”, “.m4v”, “.mpg”, “.divx”, “.mov”
	MP3	“.avi”, “.mp4”, “.m4v”, “.mpg”, “.mpeg”, “.divx”, “.mov”
	WMA	“.avi”, “.divx”

Video	Audio Codec	Extenstion
MPEG-2	AAC	“.avi”, “.mp4”, “.m4v”, “.divx”
	AAC+	“.avi”, “.mp4”, “.m4v”, “.divx”
	Linear PCM	“.avi”, “.divx”
	Dolby Digital	“.avi”, “.mp4”, “.m4v”, “.mpg”, “.divx”
	MP3	“.avi”, “.mp4”, “.m4v”, “.mpg”, “.divx”
	WMA	“.avi”, “.divx”
MPEG-4	AAC	“.avi”, “.3gp”, “.mp4”, “.m4v”, “.divx”, “.mov”
	AAC+	“.avi”, “.3gp”, “.mp4”, “.m4v”, “.divx”, “.mov”
	Linear PCM	“.avi”, “.divx”
	Dolby Digital	“.avi”, “.mp4”, “.m4v”, “.divx”, “.mov”
	MP3	“.avi”, “.mp4”, “.m4v”, “.divx”, “.mov”
	WMA	“.avi”, “.divx”
WMV7/8	AAC	“.avi”, “.divx”
	Linear PCM	“.avi”, “.divx”
	Dolby Digital	“.avi”, “.divx”
	MP3	“.avi”, “.divx”
	WMA	“.avi”, “.wmv”, “.divx”
WMV9/VC-1	Linear PCM	“.avi”, “.divx”
	Dolby Digital	“.avi”, “.divx”
	MP3	“.avi”, “.divx”
	WMA	“.avi”, “.wmv”, “.divx”
Flash	MP3	“.flv”
Real Video	Real Audio	“.rmvb”, “.rm”

Video	Audio Codec	Extenstion
Without Picture (Audio only)	AAC	".m4a", ".aac"
	AAC+	".m4a", ".aac"
	Linear PCM	".wav", ".aiff"
	Dolby Digital	".m4a", ".ac3"
	MP3	".mp3", ".m4a"
	Ogg Vorbis	".ogg"
	WMA	".wma"

Apple support

When an iPhone®, iPad®, or iPod® is connected, the MES will play music with the iPod technology and initiate quick charging (up to 2.1 A). The following Apple products are supported:

- iPhone® 5s (iOS 7.0.4)
- iPhone® 5c (iOS 7.1)
- iPhone® 5 (iOS 6.1.4)
- iPhone® 4S (iOS 5.1.1)
- iPhone® 4 (iOS 7.1)
- iPhone® 3GS (iOS 6.1.6)
- iPhone® 3G (iOS 4.2.1)
- iPad® (4th generation) (iOS 7.0.4)
- iPad® (3rd generation) (iOS 6.0)
- iPad® (2nd generation) (iOS6.0)
- iPad® (1st generation) (iOS 5.1.1)
- iPad Air® (iOS 7.0.4)
- iPad mini™ (2nd generation) (iOS 7.0.4)
- iPad mini™ (1st generation) (iOS 7.0.4)
- iPod touch® (5th generation) (iOS 6.1.3)
- iPod touch® (4th generation) (iOS 6.1.3)
- iPod touch® (3rd generation) (iOS 5.1.1)
- iPod touch® (2nd generation) (iOS 4.2.1)
- iPod touch® (1st generation) (iOS 3.1.3)
- iPod nano® (7th generation) (Firmware version 1.0.2)
- iPod nano® (6th generation) (Firmware version 1.2)
- iPod nano® (5th generation) (Firmware version 1.0.2)
- iPod nano® (4th generation) (Firmware version 1.0.3)
- iPod nano® (3rd generation) (Firmware version 1.1.2)
- iPod nano® (2nd generation) (Firmware version 1.1.3)
- iPod nano® (1st generation) (Firmware version 1.3.1)
- iPod classic® (160 GB) (End 2009) (Firmware version 2.0.4)
- iPod classic® (120 GB) (Firmware version 2.0.1)
- iPod classic® (Firmware version 1.1.2)

“Made for iPod”, “Made for iPhone”, and “Made for iPad” mean that an electronic accessory has been designed to connect specifically to iPod, iPhone, or iPad, respectively, and has been certified by the developer to meet Apple performance standards. Apple is not responsible for the operation of this device or its compliance with safety and regulatory standards. Please note that the use of this accessory with iPod, iPhone, or iPad may affect wireless performance.

iPad, iPhone, iPod, iPod classic, iPod nano, iPod touch, and Retina are trademarks of Apple Inc., registered in the U.S. and other countries. iPad Air and iPad mini are trademarks of Apple Inc.

Licenses

Dolby:

Manufactured under license from Dolby Laboratories. Dolby and the double-D symbol are trademarks of Dolby Laboratories.

DivX:

This DivX Certified® device has passed rigorous testing to ensure it plays DivX® video.

To play purchased DivX movies, first register your device at vod.divx.com. Find your registration code in the DivX VOD section of your device setup menu.

DivX®, DivX Certified® and associated logos are trademarks of DivX, LLC and are used under license.

Covered by one or more of the following U.S. patents: 7,295,673; 7,460,668; 7,515,710; 8,656,183; 8,731,369; RE45,052.

DivX Certified® to play DivX® video, including premium content.

DivX®, DivX Certified® and associated logos are trademarks of DivX, LLC and are used under license.

RMVB:

Portions of this software are included under license from RealNetworks, Inc. Copyright 1995–2011, RealNetworks, Inc. All rights reserved.

HDMI:

The terms HDMI and HDMI High-Definition Multimedia Interface, and the HDMI Logo are trademarks or registered trademarks of HDMI Licensing LLC in the United States and other countries.

Les termes HDMI et HDMI High-Definition Multimedia Interface, de même que le logo HDMI sont des marques commerciales ou des marques déposées de HDMI Licensing, LLC aux États-Unis et dans d’autres pays.

MPEG4–AVC (H.264):

THIS PRODUCT IS LICENSED UNDER THE AVC PATENT PORTFOLIO LICENSE FOR THE PERSONAL AND NON-COMMERICIAL USE OF A CONSUMER TO (i) ENCODE VIDEO IN COMPLIANCE WITH THE AVC STANDARD (“AVC VIDEO”) AND/OR (ii) DECODE AVC VIDEO THAT WAS ENCODED BY A CONSUMER ENGAGED IN A PERSONAL AND NON-COMMERCIAL ACTIVITY AND/OR WAS OBTAINED FROM A VIDEO PROVIDER LICENSED TO PROVIDE AVC VIDEO. NO LICENSE IS GRANTED OR SHALL BE IMPLIED FOR ANY OTHER USE. ADDITIONAL INFORMATION MAY BE OBTAINED FROM MPEG LA, L.L.C. SEE HTTP://WWW.MPEGLA.COM

VC-1:

THIS PRODUCT IS LICENSED UNDER THE VC-1 PATENT PORTFOLIO LICENSE FOR THE PERSONAL AND NON-COMMERCIAL USE OF A CONSUMER TO (i) ENCODE VIDEO IN COMPLIANCE WITH THE VC-1 STANDARD ("VC-1 VIDEO") AND/OR (ii) DECODE VC-1 VIDEO THAT WAS ENCODED BY A CONSUMER ENGAGED IN A PERSONAL AND NON-COMMERCIAL ACTIVITY AND/OR WAS OBTAINED FROM A VIDEO PROVIDER LICENSED TO PROVIDE VC-1 VIDEO. NO LICENSE IS GRANTED OR SHALL BE IMPLIED FOR ANY OTHER USE. ADDITIONAL INFORMATION MAY BE OBTAINED FROM MPEG LA, L.L.C. SEE HTTP://WWW.MPEGLA.COM

MPEG-4 VISUAL:

USE OF THIS PRODUCT IN ANY MANNER THAT COMPLIES WITH THE MPEG-4 VISUAL STANDARD IS PROHIBITED, EXCEPT FOR USE BY A CONSUMER ENGAGING IN PERSONAL AND NON-COMMERCIAL ACTIVITIES.

MP3:

MPEG Layer-3 audio coding technology licensed from Fraunhofer IIS and Thomson.

WMA/WMV:

This product includes technology owned by Microsoft Corporation and under a license from Microsoft Licensing, GP. Use or distribution of such technology outside of this product is prohibited without a license from Microsoft Corporation and/or Microsoft Licensing, GP as applicable.

Natune surround sound:

natune
SURROUND SOUND

Le son surround Natune est un terme général pour la famille de la dernière technologie de traitement de signal acoustique produite par DiMAGIC Co., Ltd.

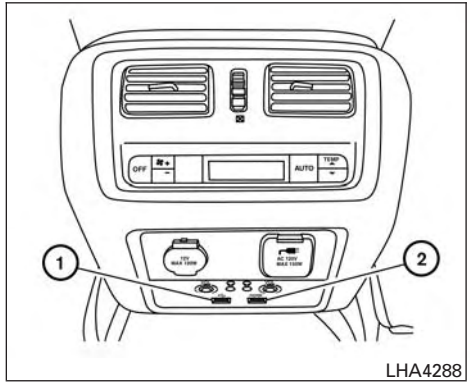

LHA4288

CONNECTING REAR MEDIA INTERFACE

Ports for the USB ① and HDMI ② interface are located at the rear of the center console box.

Compatible devices connected to the ports can be played on the rear displays. Turn off the power of the portable device before connecting to the port.

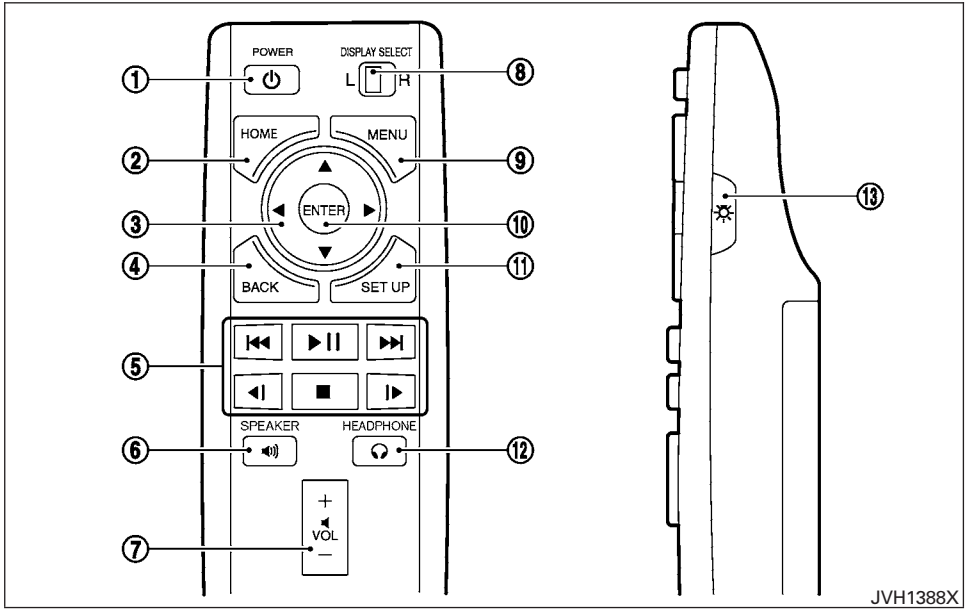

REMOTE CONTROLLER AND HEADPHONES

Remote controller

A remote controller is provided with the Mobile Entertainment System.

The remote controller is for the rear display operation and cannot be used to control portable devices.

The following buttons/switches are on the remote controller.

① ⏻ **button**
The rear displays can be activated or deactivated individually.

② **HOME button**
Push to display the HOME screen. Select the media from the DVD, AUX, USB and HDMI interface device.

③ ▲ ▼ ◀ ▶ **buttons** (select buttons)
Push the select buttons to select the items displayed on the rear screens.

④ **BACK button**
Push to go back to the previous screen

⑤ Keypad

Push the keys below for operations.

▶/II **button** Push play or pause the movie

■ **button** Push to stop playing the movie

▶▶I **button** Push to select the next chapter. Push and hold to fast-forward the chapter.

I◀◀ **button** Push once to return to the beginning of the current chapter. Push again to select the previous chapter. Push and hold to rewind the current chapter.

button Push to fast forward skipping a number of seconds (for DVD-VIDEO).

button Push to rewind skipping a number of seconds (for DVD-VIDEO).

⑥ **SPEAKER button**
Push to turn on all of the in-vehicle speakers.

⑦ Volume control button **+ -**
Push to adjust the speaker volume.

⑧ **DISPLAY SELECT button**
Slide the switch to the side corresponding to the screen you wish to operate (L or R).

⑨ **MENU button**
Push to display the operation screen for the source that is being played. For additional information, refer to “Menus” in this section.

⑩ **ENTER button**
Push to execute the selected item.

⑪ **SET UP button**
Push to display the rear seat display settings. For additional information, refer to “Settings and information” in this section.

⑫ **HEADPHONE button**
Push to turn on the sound from the headphones and turn off the speakers

⑬ **button**
Push to turn on the backlighting of the remote controller buttons.

Battery replacement:

CAUTION

- **An improperly disposed battery can harm the environment. Always confirm local regulations for battery disposal.**
- **When changing the batteries, do not let dust or oil get on the components.**

NOTE:

Change the batteries of the remote controller when it does not function properly.

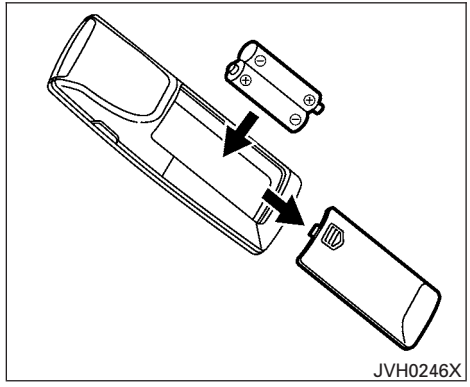

To replace the battery:

1. Open the lid as illustrated above.
2. Replace both batteries with new ones.

- Recommended battery: Size AA x 2
- Be careful not to touch the battery terminal.
- Make sure that the ⊕ and ⊖ ends on the batteries match the markings inside the compartment.

3. Close the lid securely.

- If you will not be using the remote controller for long periods of time, remove the batteries

- Replacement of the batteries is needed when the remote controller only functions at extremely close distances to the Mobile Entertainment System or when is does not function at all.

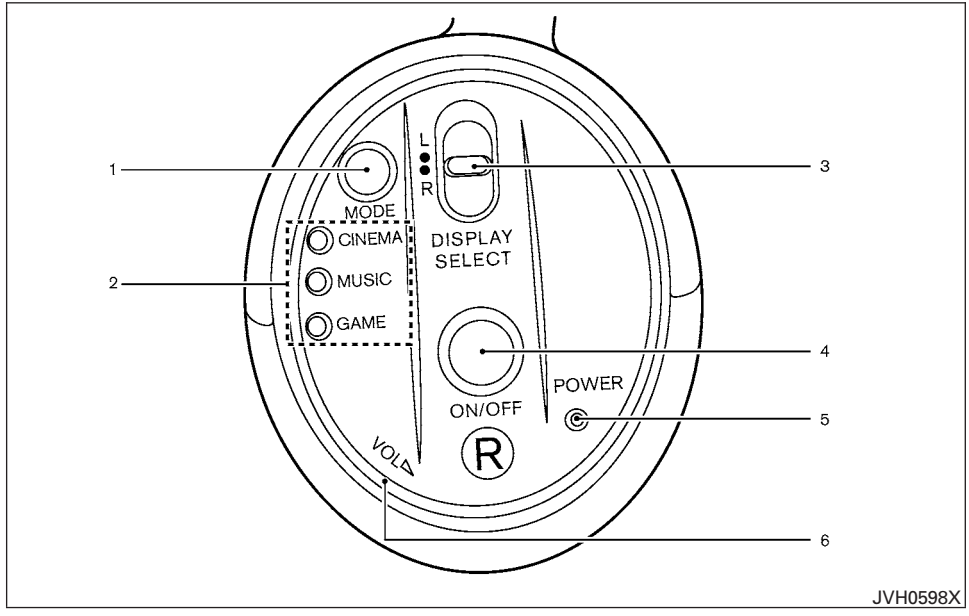

Headphones

Two wireless headphones are provided with the Mobile Entertainment System. The headphones can only be used in the rear seats.

1. **MODE button**
   Push to select a surround audio mode optimal for the media. Three types of virtual surround modes supported by natune surround sound technology are available. When the surround audio modes are turned off, a regular 2.0 ch stereo mode is applied.

CINEMA
Optimum mode for movies. Provides powerful surround audio as if you are in a theater.
MUSIC
Provides natural and clear sounds with stability optimal for listening to music.
GAME
Provides realistic sounds for playing games with bass enhanced sounds.

2. Mode indicators
   The selected surround audio mode will illuminate.
3. **DISPLAY SELECT button**
   Slide this switch to select which of the audio sources to listen to when the rear displays are playing different sources.
   L: the headphone will play audio from the source playing on the left display
   R: the headphone will play audio from the source playing on the right display
4. **ON/OFF button**
   Push to turn the headphones on or off.
5. Power ON/OFF indicator
   Illuminates when the headphones are turned on.
6. **VOL button**
   Turn to adjust the volume.

Operating tips:

- The headphones will automatically turn off after several minutes if there is no audio output during that period. The headphones will also turn off after approximately 4 hours of continuous use. To prevent the battery from being discharged, keep the power turned off when not in use.
- If the sound from the headphones is not clear, it may be due to interference from an infrared communication device or a cellular phone. If this happens, turn down the headphone volume or stop using the headphones. It is also possible that the headphones may be too far or offset from the transmitter which is in the rear display screen. Use the headphones in front of the rear display.
- The sound may also be interrupted temporarily when there is something between the headphones and the transmitter causing interference. Move the source of interference, such as opaque materials, hands, hair, etc.

Battery replacement:

⚠ CAUTION

- **An improperly disposed battery can harm the environment. Always confirm local regulations for battery disposal.**
- **When changing the batteries, do not let dust or oil get on the components.**

NOTE:

Change the batteries of the headphones when they stop functioning while playing or when noise is produced.

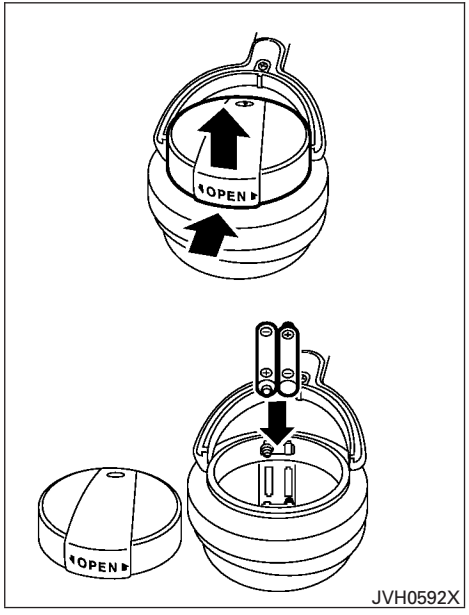

To replace the battery:

1. Open the lid as illustrated above.
   For headphones, use a flat object, such as a coin, if necessary, to open the lid located on the back of the left headphone speaker.
2. Replace both batteries with new ones.
   - Recommended battery: Size AAA x 2
   - Be careful not to touch the battery terminal
   - Make sure that the ⊕ and ⊖ ends on the batteries match the markings inside the compartment.
3. Close the lid securely.

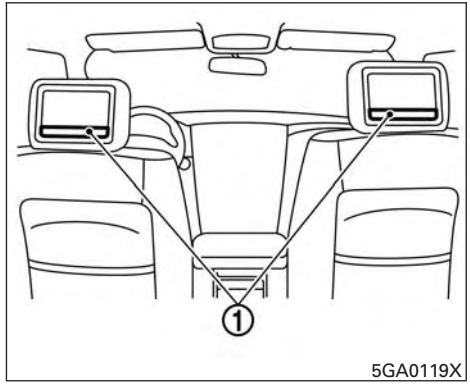

ACTIVATING REAR DISPLAYS

⚠ CAUTION

- **The glass screen on the display screen may break if hit with a hard or sharp object. If the glass breaks, do not touch the liquid crystalline material. In case of contact with skin, wash immediately with soap and water.**
- **Applying pressure to a display screen may damage it. For additional information, refer to "Care and maintenance" in this section.**

The rear displays are located on the back of the front head restraints.

Use the remote controller to operate the rear display screens. For additional information, refer to “Remote controller” in this section.

Select the left or right rear display using the DISPLAY SELECT button on the remote controller and push the ⏻ button to activate the corresponding rear display. When the display is turned on, a green indicator on the lower left corner of the display will illuminate.
The lower part of the rear displays ① functions as a signal receiver/transmitter for the remote controller and wireless headphones, and should not be blocked or covered.

Turning the rear displays on and off can also be controlled on the front display. For additional information, refer to “Controlling the rear system on the front display” in this section.

NOTE:

- **The rear displays may turn off automatically when the temperature is high to protect the display screens from being damaged.**
- **The movement of the images displayed on the rear displays could slow down when the temperature is below 32°F (0°C) but this is not a malfunction. The movement will return to normal when the temperature rises between 32°F (0°C) and 122°F (50°C).**
- **The following conditions may occur but these are characteristics of the crystal display and are not malfunctions.**
  - **Black spots, bright spots and after-images appear on this display.**
  - **The screen appears faint or dimmed depending on the angle viewed.**

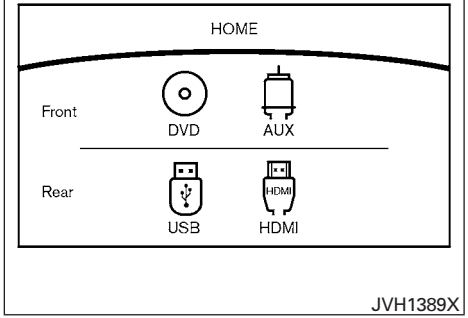

JVH1389X

OPERATIONS ON REAR DISPLAYS

Use the remote controller and take the following steps to operate the rear displays in the rear seats:

1. Turn on the rear displays using the ⏻ button on the remote controller.
2. Push the HOME button and select a source from the DVD, AUX, USB or HDMI interface devices.
   When USB is selected for the first time after the USB device is connected, select a file you with to play from the File Browser screen.

Menus

Push the MENU button on the remote controller to display the operation screen for the source that is playing. Select and adjust the preferred items using the Select buttons and the ENTER button on the remote controller. The available menu items differ depending on the selected source.

Available menu items:

- **“Speaker Output” key**
  When this item is turned on, the audio of the source playing on the corresponding rear display will be output to the vehicle speakers.
- **“Top Menu” key** (DVD only)
  Select to display the top menu screen.
- **“Title Menu” key** (DVD only)
  Menus specific to each disc will be shown. For details, see the instructions attached to the disc.
- **“Title Search” key** (DVD only)
  A scene that belongs to a specified title will be displayed each time the “+” key side or the “—” key side is selected.
- **“Use Keypad” key** (DVD only)
  Select the “Keypad” key and push the ENTER button to open the number entry screen. Enter the number you want to search for and select the “OK” key with the remote controller. The selected Title/Chapter will be played.
- **“Audio” key** (DVD, USB (DivX) only)
  Select a preferred language for the audio output.
- **“Subtitle” key** (DVD, USB (DivX) only)
  Choose the preferred subtitle language setting.
- **“Angle” key** (DVD only)
  If the DVD contains data of different angles, the angle of the image can be changed.
- **“File Browser” key** (USB only)
  The data contained in the USB can be browsed. The tracks are automatically categorized by playlists, songs, artists, composers, genres, etc.
- **“Play Mode” key** (USB only)
  Select a preferred play mode from the “Normal” key/”Repeat” key/”Shuffle” key.
- **“Aspect Ratio” key**
  Aspect can be selected from Normal, Wide, Cinema and Full.
- **“Select No.” key** (DVD (Video-CD) only)
  Select a section number you wish to play.

SETTINGS AND INFORMATION

Various settings for the MES such as aspect ratio, language, etc. can be changed on the rear displays.

Push the SET UP button on the remote controller and select the preferred item using the Select button and ENTER button to change the rear display settings and to view the system information.

Available items:

- “System Settings” key
- “Display Settings” key
- “Information” key

System settings

To change the settings of the Mobile Entertainment System, push the SET UP button on the remote controller and select the “System Settings” key.

Select the preferred item and adjust the setting using the remote controller.

Available items:

- **“Aspect Ratio”** key
  Select the image size from Normal, Wide, Cinema and Full.
- **“Language”** key
  The language displayed on the screen can be changed. Select the “Manual” key and then select a preferred language from the list. To apply the same language that is applied to the front display, select the “Auto” key.
  The language of the rear menu screens can be set independently from the front display. The rear display language settings will be applied to both the rear left and rear right displays.
- **“Operation Guide”** key
  When this item is turned on, an explanation for the menu highlighted on the screen will appear at the bottom of the screen.
- **“DivX® VOD”** key
  DivX® VOD license information can be viewed.

Display settings

To change the rear display settings, push the SET UP button on the remote controller and select the “Display Settings” key.

Select the preferred item and adjust the setting using the remote controller.

Available items

- **“Display Adjustment”** key
  - “Picture Mode” key
    Select image quality from Normal, Dynamic, Cinema and Game.
  - “Auto Bright” key
    Select from Normal, Bright, OFF and Dark. The brightness of the screen is adjusted automatically according to the brightness inside the vehicle compartment. The sensor is located on the right side corner of the rear displays.
  - “Brightness”, “Tint”, “Contrast”, “Color” and “Black Level” keys
    Adjust the levels using the ◄ or ► buttons on the remote controller.
  - “Default” key
    Select this item to reset the screen settings to the default value.
- **“Automatic Detail Enhancement”** key
  The enhancement of the contrast for details can be adjusted automatically with this function. Select the level of the function from High, Medium and Low.
- **“Super Resolution”** key
  Blurred images with a low resolution can be converted and adjusted into more crisp, clearer images. Select the level of the function from High, Medium or Low.
- **“Automatic Contrast Adjustment”** key
  Objects in dark images that are difficult to view can be adjusted and enhanced automatically for clearer viewing. Select the level of the function from High, Medium or Low.
- **“Noise Reduction”** key
  With the noise reduction function, block noise that accompanies images can be reduced. Select the level of the function from High, Medium or Low.

Software information

To display the software information of the Mobile Entertainment System, push the SET UP button on the remote controller and select the “Information” key.

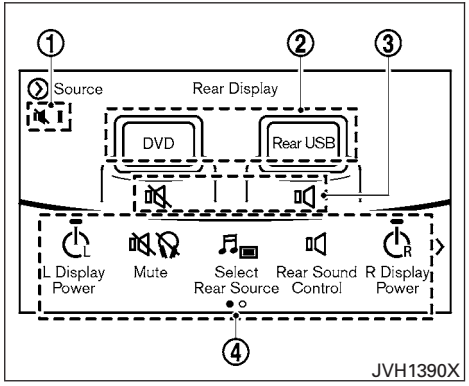

CONTROLLING THE REAR SYSTEM ON THE FRONT DISPLAY

To control the rear displays and the rear speakers on the front display, push the AUDIO button on the control panel and touch the “Rear Display” key. For additional information, refer to “Selecting audio source” in this section.

The Mobile Entertainment System screen will appear on the front display, allowing the system to be controlled from the front seats.

① Status display icons
Status of the speakers and the remote controller is shown in icons. Touch the icons to change the setting.

② Source selection indicator
Touch the left/right rear display icon to display the operation screen. The currently selected source on the corresponding rear display can be operated from the screen.

③ Speaker status indicator
Indicates which of the audio sources is selected to be heard from the speaker. Touch to show the Rear Sound Control screen and change the speaker setting.

④ Setting menu
Various settings can be changed. Touch a preferred menu to change the setting.

Available setting items

– **“L Display Power key/R Display Power”** key
Touch to turn on or off the rear display on the left/right side.

– **“Mute”** key
Touch to mute or unmute all the speakers and the headphones.

– **“Select Rear Source”** key
Touch to display the Select Rear Source screen. Select the “Left Screen” key or the “Right Screen” key and then select a source to be played on the screen.

– **“Rear Sound Control”** key
Touch to display the Rear Sound Control screen. Select a sound setting from the following items:

- “No rear sound — front only” key
- “Play sound for left display” key
- “Play sound for right display” key

– **”Source Control”** key
Touch to display the operation screen for the currently selected source. Touch the “Left Screen” key or the “Right Screen” key to select which of the rear displays you wish to operate.

– **”Remote Controller Lock”** key
Touch to lock or unlock the remote controller operation.
When the ignition switch is placed in the OFF or LOCK position, the remote controller will be unlocked.

– **“Rr Speaker Mute”** key
Touch to mute or unmute the rear speakers

– **“Auto Display Power ON”** key
Touch to turn on or off the setting for automatic power on setting. When this item is turned on, both the left and right rear displays will turn on automatically when the DVD is inserted into the front unit and the movie will start to play.

OPERATING TIPS

- The rear USB (rear media interface) and the rear HDMI cannot be played on the front screen.
- Devices connected to the USB connection port for the front display cannot be played on the rear displays.
- When connecting a device to the USB port for the first time, the system structures the file list and this could slow down the operation speed. This is not a malfunction.
- The operation speed of the system could slow down when the left and right displays play different files from the same device connected to the USB port. This is not a malfunction.
- Images from DVDs or devices connected to the USB port may not be displayed in adequate ratio depending on the resolution. To correct the ratio, adjust the aspect using the remote controller. For additional information, refer to “System settings” in this section.
- If a computer with an HDMI output terminal is connected to the HDMI input terminal, the computer may not automatically shift to the output mode. To view images on the rear displays, operate the computer and change the mode to the output mode according to the computer Owner’s Manual.

Multiple source display

It is possible to play different sources on each display

Refer to the following table of example combinations.

Playback combinations by media:

Rear Display (L)	Rear Display (R)	Availability of playback on the left and right display
DVD	DVD	Simultaneous playback
DVD	USB	Individual playback
DVD	HDMI	Individual playback
HDMI	HDMI	Simultaneous playback
HDMI	USB	Individual playback
USB	USB	Individual playback*1

*1: When playing a USB device simultaneously on the left and right displays, playback may be limited by the image quality (resolution) of the data. Refer to the following examples of combinations. However, when the system is under a heavy load, there are some combinations that cannot be played.

Combinations according to USB device image quality

Rear Display (L)	Rear Display (R)	Availability of individual playback on the left and right display
FULL HD (Maximum 1920 x 1080p)	FULL HD (Maximum 1920 x 1080p)	X (Simultaneous playback)
FULL HD (Maximum 1920 x 1080p)	SD (Maximum 720 x 480p)	O
HD (Maximum 1280 x 720p)	HD (Maximum 1280 x 720p)	X (Simultaneous playback)
HD (Maximum 1280 x 720p)	QHD (Maximum 960 x 540p)	O
HD (Maximum 1280 x 720p)	SD (Maximum 720 x 480p)	O
QHD (Maximum 960 x 540p)	QHD (Maximum 960 x 540p)	O
QHD (Maximum 960 x 540p)	SD (Maximum 720 x 480p)	O
SD (Maximum 720 x 480p)	SD (Maximum 720 x 480p)	O

Rear Display (L)	Rear Display (R)	Availability of individual playback on the left and right display
FULL HD (Maximum 1920 x 1080p)	HD (Maximum 1280 x 720p)	X (Files selected from the rear cannot be played. Enjoy the combinations that can be played)
FULL HD (Maximum 1920 x 1080p)	QHD (Maximum 960 x 540p)	X (Files selected from the rear cannot be played. Enjoy the combinations that can be played)

NOTE:

- **Different movie files cannot be played on the left and right displays at the same time if either or both of the movie files contain images with high resolution.**
- **When DVD or AUX device is selected to be played on the rear displays, different movie files cannot be played on the left and right displays at the same time.**

CARE AND MAINTENANCE

⚠ CAUTION

- **Do not apply excessive force to the monitor screen.**
- **Avoid touching or scratching the monitor as it may become dirty or damaged.**
- **Do not attempt to operate the system in extreme temperature conditions [below -4°F (-20°C) and above 158°F (70°C)]**
- **Do not attempt to operate the system in extreme humidity (less than 10% or more than 75%)**
- **For cleaning, turn the rear displays off and use a soft dry cloth. Never use a rough cloth, alcohol, benzine, thinner or any kind of solvent or paper towel with a chemical cleaning agent. They will scratch or cause discoloration to the displays. If dirt does not come off with a dry cloth, slightly dampen the cloth with neutral detergent.**

AUDIO SETTINGS

Audio settings can be adjusted or audio related functions can be turned on/off using the following procedure.

Some of the setting items may not be displayed when the audio system is turned off.

1. Push the SETTING button.
2. Touch the “Audio” key.

   The following setting items are available:

   *: Availability of the item depends on the model and specifications.

- “Sound Settings” key

Setting Items	Action
Bass	Adjust the speaker tone quality and sound balance by touching the +/- , L/R or R/F keys.
Treble	
Balance	
Fader	
Bose® Centerpoint*	When this item is turned on, surround sound playback is generated from a traditional stereo recording. Turn on this item to activate Bose® Centerpoint and to change its effect level with the Surround Vol key.
Surround Vol*	Touch the +/- keys to adjust the Surround Vol key level if Bose® Centerpoint is turned on.
Speed Sensitive Vol*	This automatically adjusts the volume depending on the vehicle speed. Touch the +/- keys to change the sensitivity level.
Driver’s Audio Stage*	When this item is turned on, a better sound quality will be provided to the driver’s position. The driver can enjoy a more crisp and clear sound that is specialized for the driver’s seat position. The prominence of the effect of this feature depends on the type of music that is played. For some music, it may be difficult to recognize the effect of this feature.

- “Display Album Cover Art” key

Turn this item on to display image files from the media device. If the media device does not contain images, no image will be displayed.

- “Radio Settings” key

Setting Items	Action
HD Mode AM	When this item is turned on, the analog and digital reception switches automatically. When this item is turned off, the reception is fixed in the analog mode.
HD Mode FM	

- “DVD Settings” key*

Setting Items	Action
Angle	Images and movies can be viewed in different angles if the DVD contains this data. Switch the angle number by touching the +/- keys.
CM Skip	Select commercial skip length from 15, 30, and 60 seconds.
DRC	Select the DRC (Dynamic Range Compression) setting from OFF, 1 and 2. DRC allows tuning of the dynamic range of sound recorded in the Dolby Digital format.
Angle Mark	Turn the angle mark display on/off. When this item is turned on, “Multi Angle” will be displayed on the DVD screen.
Menu Skip	DVD menus are automatically configured and the contents will be played directly when this item is turned on. Note that some discs may not be played directly even if this item is turned on.
DOWN MIX	When this item is turned on, a multi-channel recording will be converted to a traditional two channel (stereo) recording.
DVD Language	Enter the language code of the preferred language.
Language	Changeable items will vary depending on the type of DVD. For DVD-V: Audible language can be changed by touching the +/- keys. For Video CD: Select the sound setting from Main audio, Sub audio and Main/Sub audio. For DVD VR: Select the sound setting from Main audio 1, Sub audio 1, Main/Sub audio 1, Main audio 2, Sub audio 2, and Main/Sub audio 2.
Subtitle	The subtitle language can be changed by touching the + or - keys.
DVD Screen Settings	Touch to adjust the DVD aspect ratio.
PG/PL Mode	Touch to switch the PG/PL mode setting.

INFO:

The Available setting items differ depending on the DVD.

- “AUX settings” key*

Setting Items	Action
AUX Image Display	The image display size setting can be selected from the Normal, Wide and Cinema keys.
Volume Setting	The volume setting can be selected from the Low, Medium and High keys.

INFO:

Image display can be turned on/off by touching the “Image ON”/“Image OFF” keys on the upper right corner on the screen.

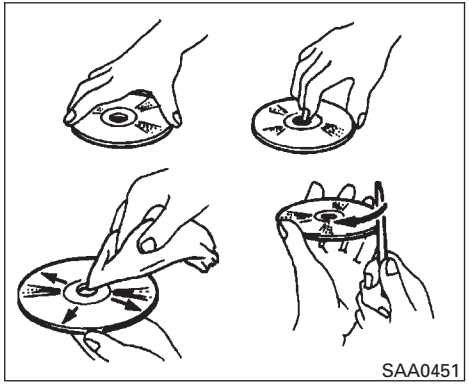

DISC/USB MEMORY DEVICE CARE AND CLEANING

Discs

- Handle a disc by its edges. Never touch the surface of the disc. Do not bend the disc.
- Always place discs in their storage cases when they are not being used.
- To clean a disc, wipe the surface from the center to the outer edge using a clean, soft cloth. Do not wipe the disc using a circular motion.

  Do not use a conventional record cleaner or alcohol intended for industrial use.
- The inner and outer edges of a new disc may be rough. Remove the rough edges by rubbing the inner and outer edges with the side of a pen or pencil as illustrated.

USB memory device

- Never touch the terminal portion of the USB memory device.
- Do not place heavy objects on the USB memory device.
- Do not store the USB memory device in very humid locations.
- Do not expose the USB memory device to direct sunlight.
- Do not spill any liquids on the USB memory device.

Refer to the owner's manual for the USB memory device for details.

GRACENOTE® END USER LICENSE AGREEMENT

This application or device contains software from Gracenote, Inc. of Emeryville, California ("Gracenote").The software from Gracenote (the "Gracenote Software") enables this application to perform disc and/or file identification and obtain music-related information, including name, artist, track, and title information ("Gracenote Data") from online servers or embedded databases (collectively, "Gracenote Servers") and to perform other functions. You may use Gracenote Data only by means of the intended End-User functions of this application or device.

You agree that you will use Gracenote Data, the Gracenote Software, and Gracenote Servers for your own personal non-commercial use only. You agree not to assign, copy, transfer, or transmit the Gracenote Software or any Gracenote Data to any third part. YOU AGREE NOT TO USE OR EXPLOIT GRACENOTE DATA, THE GRACE SOFTWARE, OR GRACENOTE SERVERS, EXCEPT WHEN EXPRESSLY PERMITTED HEREIN.

You agree that your non-exclusive license to use the Gracenote Data, the Gracenote Software, and Gracenote Servers will terminate if you violate these restrictions. If your license terminates, you agree to cease any and all use of the Gracenote Data, the Gracenote Software, and Gracenote Servers. Gracenote reserves all rights in Gracenote Data, the Gracenote Software, and the Gracenote Servers, including all ownership rights. Under no circumstances will Gracenote become liable for any payment to you for any information that you provide. You agree that Gracenote, Inc. may enforce its rights under this Agreement against you directly in its own name.

The Gracenote service uses a unique identifier to track queries for statistical purposes. The purpose of a randomly assigned numeric identifier is to allow the Gracenote service to count queries without knowing anything about who you are. For more information, see the web page for the Gracenote Privacy Policy for the Gracenote service.

The Gracenote Software and each item of Gracenote Data is licensed to you "AS IS". Gracenote makes no representations or warranties, express or implied, regarding the accuracy of any Gracenote Data from the Gracenote Servers. Gracenote reserves the right to delete data from the Gracenote Servers or to change data categories for any cause that Gracenote seems sufficient. No warranty is made that the Gracenote Software or Gracenote Servers are error-free or that functioning of Gracenote Software or Gracenote Servers will be uninterrupted. Gracenote is not obligated to provide you with new enhanced or additional data types or categories that Gracenote may provide in the future and is free to discontinue its services at any time.

GRACENOTE DISCLAIMS ALL WARRANTIES EXPRESS OR IMPLIED, INCLUDING, BUT NOT LIMITED TO, IMPLIED WARRANTIES OF MERCHANTABILITY, FITNESS FOR A PARTICULAR PURPOSE, TITLE, AND NON-INFRINGEMENT. GRACENOTE DOES NOT WARRANT THE RESULTS THAT WILL BE OBTAINED BY YOUR USE OF THE GRACENOTE SOFTWARE OR ANY GRACENOTE SERVER. IN NO CASE WILL GRACENOTE BE LIABLE FOR ANY CONSEQUENTIAL OR INCIDENTAL DAMAGES OR FOR ANY LOST PROFITS OR LOST REVENUES.

© Gracenote, Inc. 2009

When installing a CB, ham radio or car phone in your vehicle, be sure to observe the following precautions; otherwise, the new equipment may adversely affect the engine control system and other electronic parts.

⚠ WARNING

- **A cellular phone should not be used for any purpose while driving so full attention may be given to vehicle operation. Some jurisdictions prohibit the use of cellular phones while driving.**
- **If you must make a call while your vehicle is in motion, the hands free cellular phone operational mode is highly recommended. Exercise extreme caution at all times so full attention may be given to vehicle operation.**
- **If you are unable to devote full attention to vehicle operation while talking on the phone, pull off the road to a safe location and stop your vehicle.**

⚠ CAUTION

- **Keep the antenna as far away as possible from the electronic control modules.**
- **Keep the antenna wire more than 8 in (20 cm) away from the electronic control system harnesses. Do not route the antenna wire next to any harness.**
- **Adjust the antenna standing-wave ratio as recommended by the manufacturer.**
- **Connect the ground wire from the CB radio chassis to the body.**
- **For additional information, it is recommended that you visit a NISSAN dealer for servicing.**

⚠ WARNING

- **Only use a phone after stopping your vehicle in a safe location. If you have to use a phone while driving, exercise extreme caution at all times so full attention may be given to vehicle operation.**
- **If you find yourself unable to devote full attention to vehicle operation while talking on the phone, pull off the road in a safe location and stop your vehicle before doing so.**

⚠ CAUTION

To avoid draining the vehicle battery, only use a phone after starting the engine.

Your vehicle is equipped with a Bluetooth® Hands-Free Phone System. If you are an owner of a compatible Bluetooth® enabled cellular phone, you can set up the wireless connection between your cellular phone and the in-vehicle phone module. With Bluetooth® wireless technology, you can make or receive a telephone call with your cellular phone in your pocket.

Once a cellular phone is connected to the in-vehicle phone module, the procedure for connecting the phone does not need to be performed again. Your phone is automatically selected by the in-vehicle phone module when the ignition switch is switched to the ON position with the selected cellular phone turned on and carried in the vehicle.

You can register up to five different Bluetooth® cellular phones to the in-vehicle phone module. However, you can talk on only one cellular phone at a time.

The Voice Recognition system supports phone commands, so dialing a phone number using your voice is possible. For additional information, refer to “Voice Recognition system” in this manual.

Before using the Bluetooth® Hands-Free Phone System, refer to the following notes.

- Wireless LAN (Wi-Fi) and the Bluetooth® functions share the same frequency band (2.4GHz). Using the Bluetooth® and wireless LAN functions at the same time may slow down or disrupt communications and could cause undesired noise. It is recommended that you turn wireless LAN (Wi-Fi) off when using the Bluetooth® functions.
- Set up the wireless connection between a compatible cellular phone and the in-vehicle phone module before using the Bluetooth® Hands-Free Pone System.

- Some Bluetooth® enabled cellular phones may not be recognized by the in-vehicle phone module. Please visit www.nissanusa.com/bluetooth/ and search for a recommended phone list.
- You will not be able to use a hands-free phone under the following conditions:
  - Your vehicle is outside the service area for your cellular phone network.
  - Your vehicle is in an area where it is difficult to receive radio waves, such as in a tunnel, in an underground parking garage, behind a tall building or in a mountainous area.
  - Your cellular phone is locked in order to prevent dialing.
- When the radio wave condition is not ideal or ambient sound is too loud, it may be difficult to hear the other person's voice during a call.
- This Bluetooth® system supports Wideband speech, which enhances the sound quality of phone calls placed over Bluetooth®. To take advantage of this feature, the cellular device should be used on a carrier supporting Adaptive MultiRate Wideband (AMR-WB) or HD voice technology. The performance of AMR-WB may vary by carrier and calling area. Consult your cellular carrier if you experience issues with call quality or connection.
- Immediately after the ignition switch is turned ON, it may be impossible to receive a call for a short period of time.
- Do not place the cellular phone in an area surrounded by metal or far away from the in-vehicle phone module to prevent tone quality degradation and wireless connection disruption.
- While a cellular phone is connected through the Bluetooth® wireless connection, the battery of the cellular phone may discharge quicker than usual.
- If the Bluetooth® Hands-Free Phone System seems to be malfunctioning, please visit www.nissanusa.com/bluetooth/ for troubleshooting help.
- Some cellular phones or other devices may cause interference or a buzzing noise to be emitted from the audio system speakers. Storing the device in a different location may reduce or eliminate the noise.
- Refer to the owner's manual for the cellular phone for information regarding the telephone pairing procedure specific to your phone, battery charging , and cellular phone antenna, etc.
- The antenna display on the monitor may not match the antenna display of some cellular phones.
- The battery display on the monitor may not match the battery display of some cellular phones.
- Keep the interior of the vehicle as quiet as possible to her the caller's voice clearly as well as to minimize echoes.
- If reception between callers is unclear, adjusting the incoming or outgoing call volume may improve the clarity.

REGULATORY INFORMATION

FCC Regulatory Information

FCC ID: HYQDNNS086

NOTE:

This device complies with part 15 of the FCC Rules. Operation is subject to the following two conditions: (1) This device may not cause harmful interference, and (2) this device must accept any interference received, including interference that may cause undesired operation.

FCC WARNING: Changes or modifications not expressly approved by the party responsible for compliance could void the user's authority to operate the equipment.

CAUTION: Radio Frequency Radiation Exposure

This equipment complies with FCC radiation exposure limits set forth for uncontrolled environment and meets the FCC radio frequency (RF) Exposure Guidelines. This equipment has very low levels of RF energy that it deemed to comply without maximum permissive exposure evaluation (MPE). But it is desirable that it should be installed and operated with at lease 20cm and more between the radiator and person's body.

Co-location: This transmitter must not be co-located or operated in conjunction with any other antenna or transmitter.

IC Regulatory Information

The antenna cannot be removed (and changed) by the user.

NOTE:

This device complies with Industry Canada license–exempt RSS standard(s). Operation is subject to the following two conditions: (1) This device may or may not cause interference, and (2) this device must accept any interference, including interference that may cause undesired operation of the device.

CAUTION: Radio Frequency Radiation Exposure

This equipment complies with IC radiation exposure limits set forth for uncontrolled environment and meets RSS-102 of the IC radio frequency (RF) exposure rules. This equipment has very low levels of RF energy that it deemed to comply without maximum permissive exposure evaluation (MPE). But it is desirable that it should be installed and operated with at least 20cm and more between the radiator and person's body.

Co-location: This transmitter must not be co-located or operated in conjunction with any other antenna or transmitter.

This Class B digital apparatus meets all requirements of the Canadian Interference Causing Equipment Regulations.

L'antenne ne peut être enlevé (et modifié par l'utilisateur).

NOTE:

Le préent appareil est conforme aux CNR d'Industrie Canada applicables aux appareils radio exempts de licence. L'exploitation est autorisé aux deux conditions suivantes: (1) l'appareil ne doit pas produire de brouillage, et (2) l'utilisateur de l'appareil doit accepter tout brouillage radioéectrique subi, mêe si le brouillage est susceptible d'en compromettre le fonctionnement.

The Bluetooth® word mark and logos are registered trademarks owned by Bluetooth SIG, Inc. and any use of such marks by DENSO CORPORATION is under license. Other trademarks and trade names are those of their respective owners.

PHONE

Connecting Bluetooth® Device

Your vehicle is equipped with a Bluetooth® Hands-Free Phone System and Bluetooth® streaming audio device. If you are an owner of a compatible Bluetooth® enabled cellular phone or Bluetooth® audio device, you can set up the wireless connection between your cellular phone and the in-vehicle phone module, or Bluetooth® audio and in-vehicle audio module. With Bluetooth® wireless technology, you can make or receive a telephone call with your cellular phone in your pocket and listen to music on your Bluetooth® streaming audio device via the in-vehicle system.

Connecting cellular phone/audio device

1. Press the SETTING button.
2. Touch the “Bluetooth” key and touch the “Connect Device” key.
3. Touch the “Add New (X/5 Free)” key to register a device.
4. When a PIN code appears on the screen, operate the compatible Bluetooth® cellular phone to enter the PIN code.

   The pairing procedure for cellular phones varies depending on the model of cellular phone. Refer to the owner’s manual for the cellular phone for details.

   If the registered device has both audio and phone functions, the system displays a message asking if you would like to register the device for another function.

   The procedure for connecting a cellular phone/audio device varies depending on the Bluetooth® device. Refer to the owner’s manual for the Bluetooth® device for details.

NOTE:

Some cellular phones or other devices may cause interference or a buzzing noise to be emitted from the audio system speakers. Storing the device in a different location may reduce or eliminate the noise.

You can also visit www.nissanusa.com/bluetooth/ or call NISSAN Consumer Affairs Department for instructions on pairing NISSAN recommended cellular phones or audio devices.

Phone selection

Select one of the connected devices for operation.

1. Push the switch, then touch the “Select Phone” key. A list of the connected cellular phones is displayed.
2. Select one of the connected cellular phones from the list.
3. When selection of the device is successful, a message on the display indicates that the cellular phone was selected.

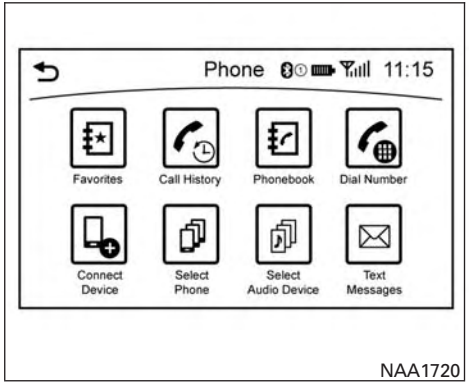

Making a call

1. Push the switch.
2. Select one of the following methods to make a call.

   Available methods

   - Favorites

   Select a telephone number from a list of personally selected numbers.

   - Call History

   Select a telephone number from recent incoming or outgoing calls.

   - Phonebook

   Select a telephone number from the phonebook.

   The telephone number must be transferred to the phonebook from the cellular phone prior to using this method. For additional information, refer to “Phone and text message settings” in this section.

   - Dial Number

   Input the phone number manually using the keypad displayed on the screen. Touch the key to call the number. For additional information, refer to “Character (letters and numbers) input screen” in this section.

3. The number will be dialed and the screen will change to the call in progress screen.

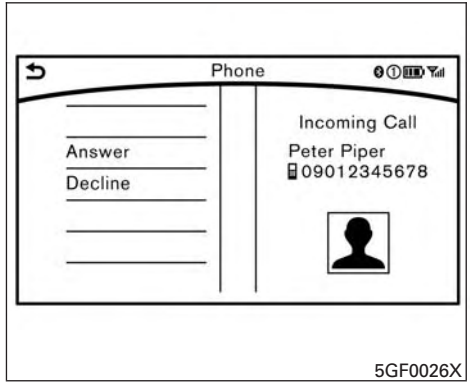

Receiving a call

When you receive a phone call, a notification message is displayed on the touch-screen display with a ring tone.

Taking a call

To answer a call, take one of the following actions.

- Push the switch.
- Touch the “Answer” key.

Reject a call

To reject a call, touch the “Decline” key.

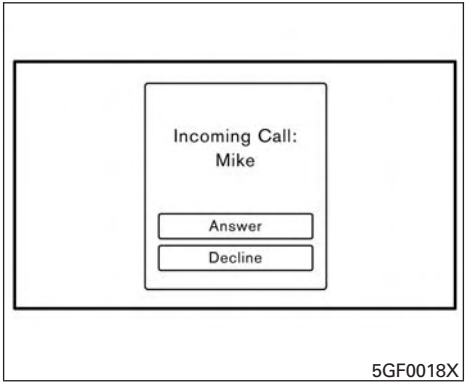

Receiving a call while on the line with another person

When another phone call is received while on the line with another person, a message box informing you of the incoming call will appear on the display.

Available items

Available Items	Action
Answer	Take the second call and put the fist call on hold.
Decline	Reject the second call and keep the fist call on line.

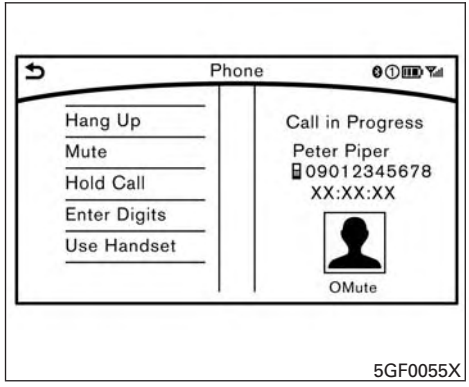

During a call

There are various options available during a call. Select one of the following options displayed on the screen if necessary.

Available items

Available Items	Action
Switch Call*	Answers another incoming call. The person you are talking to will be placed on hold. Push once more to speak to the person on hold again.
Hang Up	This disconnects the person you are currently connected to and will connect you to the person who is on hold.
Mute/ Cancel Mute	When muted, your voice will not be heard by the person on the other end of the line.
Hold Call**	Places the call on hold.
Enter Digits	Using the touch tone, send digits to the connected party for using services such as voicemail.
Use Handset/ Use Hands free	Transfers the call to the cellular phone.
End All Calls*	Hangs up all calls including the ones that were on hold.

*: Available when multiple lines are connected.

**: Available when a single line is connected.

- To adjust the volume of the person's voice to be louder or quieter, push the **—/+** button on the steering wheel or turn the VOL/ON ▪ OFF button on the audio main button, while talking on the phone.
- Touch the "Mute" key if you do not want your voice to be heard by the person on the other end of the line.

Bluetooth® settings

The Bluetooth® settings can be set in detail according to the user's preference.

1. Press the SETTING button.
2. Touch the "Bluetooth" key.
3. Touch the preferred item.

- Bluetooth

  Turns the Bluetooth® connection to the vehicle on/off.

- Connect Device

  Touch this item to connect to the Bluetooth® device. You can also delete a registered device and display information for the registered device.

- Select Phone

  Registered Bluetooth® Hands-Free Phones are shown on the list. Select a device from the list to disconnect or connect a Bluetooth® device.

- Select Audio Device

  Registered Bluetooth® audio players are shown on the list. Select a device from the list to disconnect or connect a Bluetooth® device.

- Vehicle Bluetooth Device Info

  The registered device name and the PIN code can be changed.

HANDS-FREE TEXT MESSAGING ASSISTANT

⚠ WARNING

Use the text messaging feature after parking your vehicle in a safe location. If you have to use the feature while driving, exercise extreme caution at all times so full attention may be given to vehicle operation.

⚠ CAUTION

This feature is disabled if the connected device does not support the Message Access Profile (MAP). For additional information, refer to the owner's manual for your phone.

Laws in some jurisdictions may restrict the use of "Text-to-Speech". Check local regulations before using this feature.

The text messaging assistant system allows the sending and receiving of the text messages through the vehicle interface.

Depending on the device that is connected to the vehicle, some of the items may not be displayed.

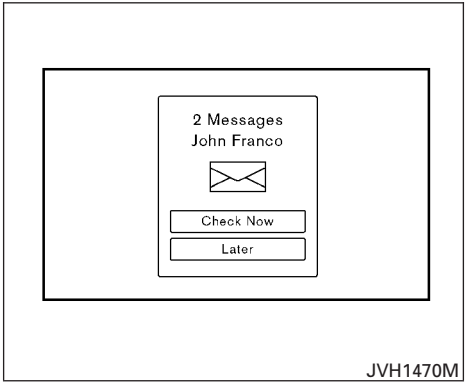

Receiving a message

When the cellular phone connected to the vehicle receives a text message, a notification is displayed on the display accompanied by a tone.

To check the message, touch the “Check Now” key. Touch the “Later” key to save the message to be checked later.

Using the text message function with iPhone®.

If you would like to use the text message function with your iPhone®, please follow the steps below.

1. Connect iPhone® to the Bluetooth® Hands-Free Phone System.
2. Disconnect iPhone® from vehicle setting menu.
3. Turn “Show Notification” ON from Bluetooth® setting menu on your iPhone®.
4. Connect iPhone® from vehicle setting menu.

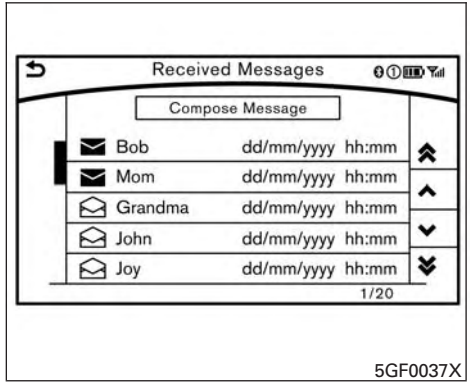

Displaying received message list

1. To display the phone menu screen, take the following actions:
   - Push the switch on the steering wheel or control panel (if so equipped).
2. Touch the “Text Messages” key.
3. Touch an item on the list to read or to reply to the message.

Up to 20 messages can be stored on the message list.

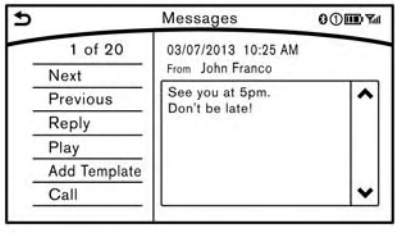

NAA1656

Received message screen

Touching the “Check Now” key on the new message notification screen or selecting a message from the message list will show details of the received message on the display.

Available actions:

- Next:

  Touch to read the next message.

- Previous:

  Touch to read the previous message.

- Reply:

  A reply template can be selected.

  For additional information, refer to “Sending a text message” in this section.

- Play/ Stop:

  Touch the “Play” key to have the hands-free phone system read out the received message. Touch “Stop” to stop reading.

- Add Template:

  The received text message can be added to the template (text list).

- Call:

  If the sender of the message is registered in the Phonebook, touch this menu to make a call to the sender.

- After the message is read out, a message box will appear and an action can be selected.

Reply	Create a reply message. For additional information, refer to “Sending a text message” in this section.
Next	Have the system read out the next message.

- If the sender’s name and address is registered in the Phonebook, the name of the sender is displayed as sender information on the screen.

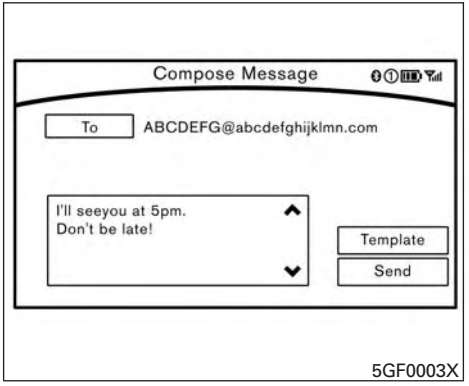

Sending a text message

To display the phone menu screen, take the following actions:

1. Push the switch on the steering wheel or on the control panel (if so equipped).
2. Touch the “Text Message” key.
3. Touch the “Compose Message” key.

The following items are available.

Available item		Action
To	Keypad	Type in the address of the recipient using the keypad. Touch the “OK” key to confirm the address.
	Phonebook	Select a recipient from the phonebook and touch the “OK” key to confirm.
Template	Select from list	Select an item from the message list. The selected text will be added to the message to be sent.
	Edit Text Message Replies	Select an item in the message list to be edited. Use the keypad to edit the text and touch the “OK” key to complete editing.
Send		Touch to send the message.

PHONE AND TEXT MESSAGE SETTINGS

Phone settings

The Bluetooth® Hands-Free Phone System can be set in detail according to the user's preference.

1. Press the SETTING button.
2. Touch the "Phone/Mail" key.
3. Touch the "Phone Settings" key.

The following phone setting items are available.

Incoming Call Settings:

Setting item	Action
Ringtone	Select a type of ringtone.

Phonebook/Favorites Settings:

Setting item			Action
Configure Phonebook Settings	Automatic Transfer Settings	Phonebook Auto download	Turns automatic download of the phonebook from the cellular phone on/off.
		Call History Download	Turns automatic download of the cellular phone call history on/off.
	Manual Phonebook Transfer	Transfer and Overwrite (Depending on cellular phone)	Manually transfers information from the phonebook on the cellular phone.
		Transfer and Add (Depending on cellular phone)	
	Delete Phonebook		To delete a single item, select the item you wish to delete from the list. Touch the "Delete All" key to delete all items. To delete multiple items, touch the "Multiple Selection" key.

Setting item			Action
Favorites Settings	Delete Favorites		To delete a single item, select the item you wish to delete from the list. Touch the “Delete All” key to delete all items. To delete multiple items, touch the “Multiple Selection” key.
	Add to Favorites	From Phonebook	Select items from the phonebook of the in-vehicle system to add to the favorites.
		From Outgoing Calls	Select items from the outgoing calls list to the in-vehicle system to add to the favorites.
		From Incoming Calls	Select items from the incoming calls list of the in-vehicle system to add to the favorites.
		From Missed Calls	Select items from the missed calls list of the in-vehicle system to add to the favorites.
Delete Call History	Delete Outgoing Call History		To delete a single item, select the item you wish to delete from the list. Touch the “Delete All” key to delete all items. To delete multiple items, touch the “Multiple Selection” key.
	Delete Incoming Call History		
	Delete Missed Call History		
	Delete ALL Call History		

The volume of the ringtone, incoming call and outgoing call can also be adjusted.

Mail settings

Various settings can be changed from the Mail Settings screen.

1. Press the SETTING button.
2. Touch the “Phone/Mail” key.
3. Touch the “Mail Settings” key.

The following mail setting items are available.

Settings item	Action
Message Download Settings	The transfer function can be turned on/off. When the transfer function is on, the phonebook on the cellular phone will be automatically downloaded to the hands-free messaging system when connected.
Attempts for Sending	The number of reattempts after failing to send a text message can be selected between 0 and 3.
New Message Alert	The type of tone used for the notification sound can be selected.
Edit Text Message Replies	The template (text to select from when composing an outgoing message) can be edited.

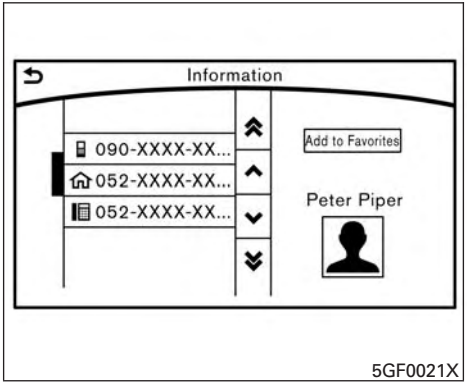

Phonebook

Information in the phonebook on cellular phones can be downloaded. For additional information, refer to “Phone and text message settings” in this section.

1. Push the switch.
2. Touch the “Phonebook” key and select from the list.

This can be viewed on the display and used to make calls or send text messages.

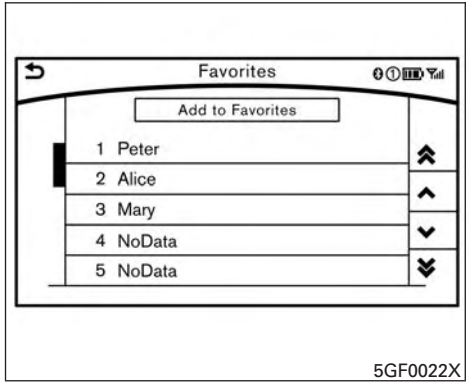

Favorites

Up to 40 phone numbers can be transferred to the favorites list from a cellular phone.

1. Push the switch.
2. Touch the “Favorites” key and select from the list.

It can be viewed on the display and used to make calls or send text messages.

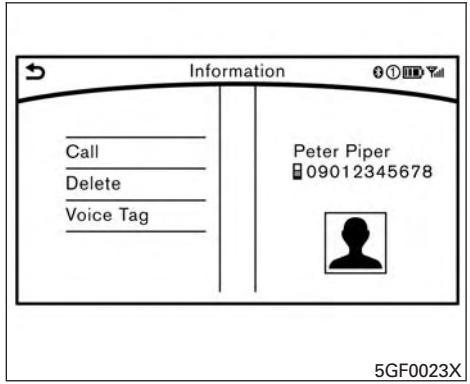

Voice Tag:

A custom voice tag can be recorded for phone numbers on the favorites list and used to dial the number by speaking it.

1. Push the switch.
2. Touch the “Favorites” key.
3. Select an item from the list.
4. Touch the “Voice Tag” key.

Available items	Action
Register	Touch to record a voice tag for the phone number.
Re-registration	Touch to record the voice tag.
Play	Play the recorded voice tag.
Delete	Touch to delete the voice tag.

BLUETOOTH® INFORMATION

Information about the connected Bluetooth® device can be viewed.

1. Press the SETTING button.
2. Touch the “Bluetooth” key.
3. Touch the “Vehicle Bluetooth Device Info.” key.

The following items are available.

Available item	Action
Device Name	The name of the connected Bluetooth® device is displayed. Touch the “Device Name” key to display the keyboard input screen for editing.
Enter PIN Code	The passkey of the connected Bluetooth® device is displayed. Touch the “Enter PIN Code” key to display the keyboard input screen.
Device Address	The device address of the connected Bluetooth® device is displayed.

NISSANCONNECT℠ APPS OVERVIEW

Laws in some jurisdictions may restrict the use of some of the applications and features, such as social networking and texting. Check local regulations for any requirements.

NissanConnect℠ Apps provide in-vehicle access to NissanConnect Vehicle Apps.

Some pre-installed NissanConnect Vehicle Apps can be used without taking any extra steps.

⚠ CAUTION

- **While driving, some operations are limited in order to prevent distracting the driver. While driving, avoid keeping a close watch on the display.**
- **Some application services may be subject to change or termination without prior notice.**

The system allows you to download new applications, update downloaded applications and delete downloaded applications in a similar manner as popular smartphone operating systems.

You will need to connect a compatible smartphone to the vehicle in order to update NissanConnect Vehicle Apps.

The usage of applications is only guaranteed for smartphones that have been tested and approved for use with NissanConnect℠ Apps. Only iPhone® and Android devices are currently supported. Android smartphones must support Bluetooth® and SPP (Serial Port Profile).

USING APPLICATIONS

NOTE:

To use APP functions on the models without a navigation system, the calendar setting is necessary for checking the SSL expiration date. For additional information, refer to “Clock settings” in this section.

MAIN OPERATION

Push the APPS button to display the menu screen.

Touch the icon for the desired application. The selected application will be launched.

The applications shown on the menu screen and the display order can be customized. For additional information, refer to “App Garage Settings screen” in this section.

Some applications can be set to launch automatically upon vehicle ignition.

NISSANCONNECT VEHICLE APPS

NissanConnect Vehicle Apps are unique applications developed by NISSAN.

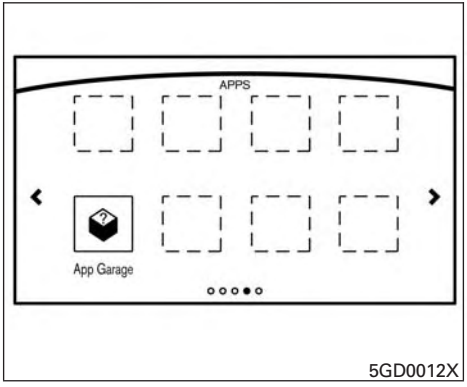

App Garage screen

Push the APPS button and touch the “App Garage” key.

Available settings

- “Vehicle Apps Manager” key (if so equipped)
  Installs, uninstalls and updates NissanConnect Vehicle Apps.
- “App Garage Settings” key
  View Apps information, manage Apps, customize shortcuts on the menu screen and set notifications.
- Available application list
  Displays the downloaded NissanConnect Vehicle Apps.
  When a listed application is selected, the application will start.

App Garage Settings screen

You can use various application settings.

1. Press the APPS button and touch the “App Garage” key.
2. Touch the “App Garage Settings” key.

Menu Item		Action
All Apps		Shows all applications. Select an application from the list to modify additional application-specific settings.
Running Apps	Applications list	Displays all running applications. To display application information or stop an application, select the desired application from the list.
	Stop All	Stops all running applications.
Menu Icon Location Setting	Applications list	Shows or hides the application icon on the menu screen.
	Delete All	Deletes all application icons on the menu screen.
Auto Start Setting		Enables this setting to automatically launch the application upon vehicle ignition.
System Information		Displays system information.
Install Apps via USB		Installs an application via USB from the NISSAN portal site.
Automatic Connection (if so equipped)		Sets the connecting interval. NissanConnect Vehicle Apps Manager (if so equipped) connects to the server at regular intervals in order to obtain up-to-date information (such as checking for application updates).

Menu Item	Action
Network Notification (if so equipped)	If the Network Notification key is on, a pop-up message is displayed when a network connection is established.
Installation Notification (if so equipped)	If the Install Notification key is on, a pop-up message is displayed when a new application is installed.
Factory Data Reset	Discards the downloaded or stored application data.

NOTE:

- If the Auto Start Setting is enabled, some applications may be accessible to other drivers of your vehicle.
- When the “Network Notification” key (if so equipped) is turned off, some apps will be started automatically and use network communication. Communication fees will be charged.
- Depending on the type of application, some applications may not be displayed in the “Running Apps” key field even if they are running.
- The Auto Start function may not be available for some applications.

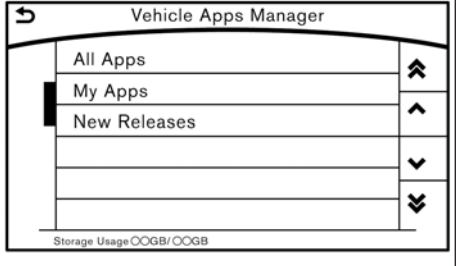

5GD0004X

NissanConnect Vehicle Apps Manager (if so equipped)

On this screen, you can update, uninstall and install NissanConnect Vehicle Apps.

1. Press the APPS button and touch the “App Garage” key.
2. Touch the “Vehicle Apps Manager” key.

Available setting items

- “All Apps” key
  Displays all available NissanConnect Vehicle Apps. You can select to display application information, update, install and uninstall applications.
- “My Apps” key
  Displays installed NissanConnect Vehicle Apps. You can select to display application information, update and uninstall applications.
- “New Releases” key
  Displays newly released NissanConnect Vehicle Apps. You can select to install applications.

NOTE:

- In order to display the application list screen or the installation and update screens using the NissanConnect Vehicle Apps Manager, connection via a smartphone is required to establish communication.
- NissanConnect^{SM} Apps must be installed and running on a compatible smartphone in order to download updates or use NissanConnect Vehicle Apps that require a network connection. For additional information, refer to “Getting user ID and password” in this section.

The major Apps available for use in this system

The major Apps available for use in NissanConnect℠ Apps are as follows.

The Apps are to be updated in the near future.

APPS	Descriptions
Quick Guide	You can see how to connect a Bluetooth® device, make a call and set the clock.
Driving Performance	Vehicle performance such as Fuel Flow, Accel, etc., can be understood intuitively.
Maintenance Note	You can check maintenance items inside the vehicle at your convenience.
Calendar*/** (if so equipped)	Today's schedule can be checked before you leave. Your schedule is linked to web-based services.
Email*/** (if so equipped)	The email account you use can also be accessed through the vehicle system. You will be informed when a new email is received.
Compass (models with navigation system)	In addition to the current traveling direction of the vehicle, the direction of the destination is also shown. Accurate information cannot be provided if GPS position information cannot be obtained.
Clock	Clock shows the current time in various kinds of skins.

*: Requires an account to be set up.
**: Requires NissanConnect℠ Apps to be downloaded to your smartphone.

WARNING

- **Use the information from the Driving Performance strictly as a reference to make your driving more comfortable. The readings are not meant to prevent accidents caused by reckless driving or poor driving conditions (due to weather, road conditions, etc.). Always obey all traffic regulations and posted speed limits.**
- **Operating the Driving Performance while driving can lead to a crash resulting in serious injuries or death. Always park the vehicle in a safe place before operating the display screen.**
- **Look at the display screen only briefly while driving. Keep your eyes on the road. Inattentive driving may lead to a crash resulting in serious injuries or death.**

For Canada

NOTE:

A PIN code can be used so that other people cannot see your email and calendar apps. When the engine is turned off and then on again, the PIN code has to be input. After the PIN code is input, regardless of whether your smartphone is connected to the vehicle or not, your email and calendar apps will be viewable until the engine is turned off. When the system is set to valet parking, if the relevant account is erased, your email and schedule will be erased from the system.

INFO:

- NissanConnect℠ Apps must be installed and running on a compatible smartphone in order to download updates or use NissanConnect Vehicle Apps that require a network connection. For additional information, refer to “Getting user ID and password” in this section.
- When email service and calendar schedule information are displayed in the in-vehicle display, the system controls the display based on the ID and password. Therefore, users are required to manage an ID and password.

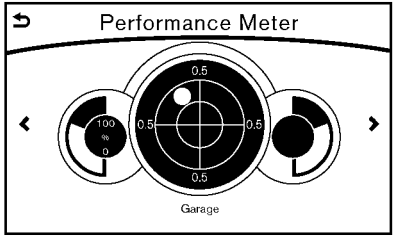

JVH1479M

Examples of how NissanConnect Vehicle Apps is used

Example 1: Driving Performance application

This allows you to see the vehicle status and the results of driving operation.

1. Push the APPS button and touch the “Driving Performance” key.
2. Touch the < or > key to change the layout of the Driving Performance meter.

Touch the meter illustration on the Performance Meter screen to select another meter to display.

NOTE:

Use the displayed information as a reference. It may differ from actual vehicle information depending on the road surface conditions or temperature. Also, it may differ from what is displayed on the vehicle combination meter.

- **Lateral G (G force) and vertical G: Due to the inclination of the road surface, G may occur even when the vehicle stops. This is not a malfunction.**
- **Fuel economy: This is a guideline for the level of fuel economy driving. Therefore, it may differ from the actual fuel economy achieved.**

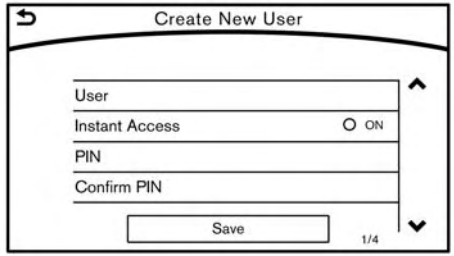

5GD0028X

Example 2: email application (if so equipped)

This allows you to access web-based email through an in-vehicle interface. When you use this application for the first time, you need to create a new user.

To use the email application service, connect a smartphone to the vehicle.

1. Push the APPS button and touch the “Email” key.
2. Touch the “Create New User” key. The new user input screen will be displayed.

3. Input your name and PIN code and select the “Instant Access” key ON or OFF and then touch the “Save” key.

INFO:

If the Instant Access mode is set to ON, it is not necessary to enter a PIN code each time.

4. The stored user name is displayed in the list. Touch the user name.
5. Input PIN code and touch the “OK” key. This will display your mail box screen.

If an account is not yet set up, set up an account (Google account, etc.) in the Manager Account screen displayed.

INFO:

- On the receive message screen, touch the sender name or address to display the sender detail screen.
- System folders (Inbox, Draft, Send, etc.) cannot be modified.

USING VOICE RECOGNITION SYSTEM

Initialization

The Voice Recognition system will activate a few seconds after the ignition switch is turned on. Once activation is complete, you can start using the system by pushing the switch on the steering wheel and speaking voice commands. If the switch on the steering wheel is pushed before the activation completes, the display will show a message to wait until the system is ready.

BEFORE STARTING

To get the best recognition performance from the Voice Recognition system, observe the following items.

- The interior of the vehicle should be as quiet as possible. Close the windows to eliminate surrounding noises (traffic noise and vibration sounds, etc.) which may prevent the system from correctly recognizing the voice commands.
- Wait until the tone sounds before speaking a command.
- Speak in a natural conversational voice without pausing between words.

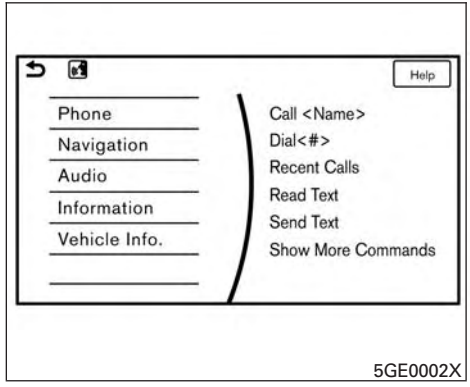

GIVING VOICE COMMANDS

1. Push the switch located on the steering wheel.
2. A list of commands appear on the screen, and the system provides a voice menu prompt.

   When this screen is displayed, almost all of the commands can be recognized. Available commands for each category can be shown on the right side of the screen. Highlight a category listed on the left side of the screen with the multi-function controller to find your preferred command.

Selecting a category by touching the screen or pressing the ENTER button will execute the command. After executing the category command, only the commands related to the selected category can be recognized.

3. After the tone sounds and the icon on the screen changes from to , speak a command. You can also select a command by directly touching the screen.

The Voice Recognition system will pause operation when the multi-function controller is moved. To resume operation, push the switch on the steering wheel.

4. Continue to follow the voice menu prompts and speak after the tone sounds until the preferred operation is completed.

To cancel the voice command, push and hold the switch.

You can interrupt the voice prompt at any time by pushing the switch.

Operating tips

- Speak a command after the tone.
- If the command is not accepted, the system announces, “Please say again”. Repeat the command in a clear voice.
- Push the switch on the steering-wheel once to return to the previous screen.
- Voice commands spoken from the passenger seat cannot be recognized.
- When the switch on the steering wheel is pushed while the air conditioner is set to the Auto mode, the system controls the air conditioner fan speed in order to improve Voice Recognition performance. When the fan speed is set higher than the 4th speed position, the fan speed is decreased to 4th speed. When the air conditioner is set to the manual mode, the fan speed does not change. The accuracy of Voice Recognition may be affected depending on the fan speed and the air direction.
- To skip the voice guidance function and give the command immediately, push the switch on the steering wheel to interrupt the system. Remember to speak after the tone.
- To cancel the command, push and hold the switch or the switch on the steering-wheel.
- To adjust the volume of the system feedback, push the volume switch on the steering wheel or use the audio system **VOL/ON•OFF** button while the system is making the announcement.

Voice prompt interrupt

Push the switch on the steering-wheel to stop the voice prompt and give the command at once. Remember to wait for the tone before speaking.

How to see the voice command screen

1. Push the switch to display the first screen of the voice command list.
2. Speak a command or select an item from the voice command list. The second screen is displayed.
3. Speak a command. The list screen is displayed.
4. Speak the preferred number from the list to perform operation.

The voice commands can be spoken one at a time following prompts step by step or the command can be spoken successively in one step.

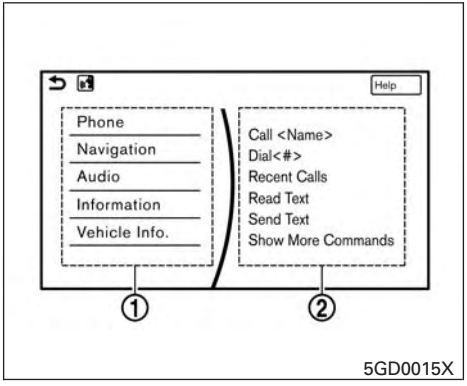

First screen

① Shows available command list. It is also available to select a command from this list by touching or using the multi-function controller.

② Shows available command list. Displayed commands are only available to execute through Voice Recognition. You can say commands from the left screen and the right screen continuously.

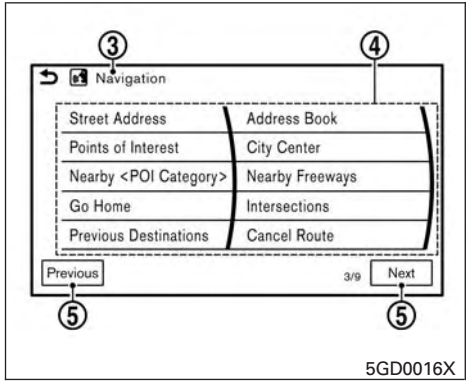

Second screen

③ Previously selected command.

④ Command list

You can say a command from the list, touch the screen directly or select, using the steering switch or the multi-function controller. You can say a preferred word for the < > enclosed part of the command.

⑤ “Previous”/ “Next” key

Say as a command or touch to go to the previous/next screen. It cannot be selected using the steering switch or multi-function controller.

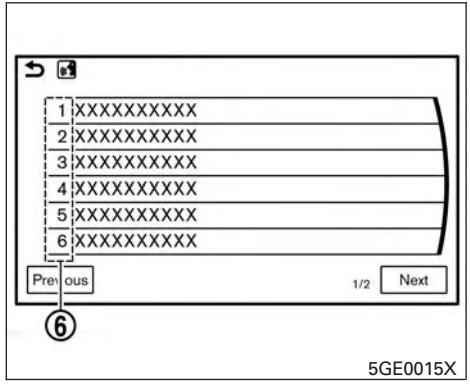

List screen

⑥ Command numbers

Speak 1 to 6 numbers to select. Also, you can touch the screen directly, using the steering switch or the multi-function controller.

How to speak numbers

Voice Recognition requires the user speak numbers in a certain way when giving voice commands.

General rule

Only single digits 0 (zero) to 9 can be used. (For example, if speaking 500, “five zero zero” can be used, but “five hundred” cannot.)

Examples

1–800–662–6200

“One eight zero zero six six two six two zero zero”

For the best recognition, speak “zero” for the number “0” and “oh” for the letter “o”.

Voice command examples

As examples, some additional basic operations that can be performed by voice commands are described here.

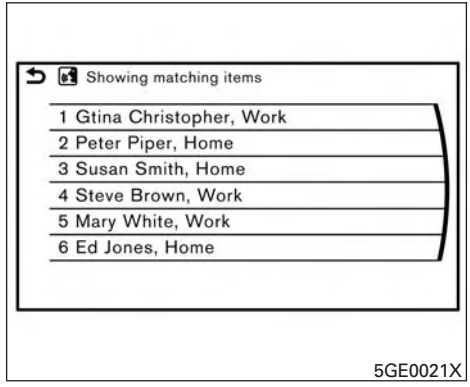

Example 1– Placing a call from handsfree phonebook:

1. Push the switch located on the steering wheel.
2. Wait for the indicator to change to and speak “ Phone”.

You can also speak “Phone” and then “Call <Name> successively.

3. Speak “Call <Name>”.

When options (Home, Work, etc.) are registered to a name in the contact list of a cellular phone, the option can be commanded directly.

Example, “Call Steve Brown Work” or “Call Steve Brown Other”

4. The system prompts you to speak or select an item number from the displayed list. To select a displayed matching item, speak a number from between 1 and 6.

If the selected number has more than one phone number registered to it, the phone number list is displayed.

Example 2– Playing radio:

1. Push the switch located on the steering wheel.
2. Wait for the indicator to change to and speak “Audio”.
3. Speak “Play FM” to turn on the FM radio.

Command list

To use the Voice Recognition function, you can speak commands in the order of 1st command, 2nd command and 3rd command. You can also operate the system with directly speaking the 2nd or 3rd command.

Variable numbers or words such as names can be applied in < > when speaking a command.

For additional information, refer to the separate Navigation System Owner’s Manual (if so equipped) for the navigation command.

General command

Command	Action
Show More Commands	Displays other commands of the same category.
Go Back	Corrects the last recognition result to return to the previous screen.
Exit	Cancels Voice Recognition.
Next	Skips to the next page.
Previous	Skips to the previous page.

General phone command

The following commands can be used during the Voice Recognition session.

Command	Action
Dial	The system makes a call to a spoken phone number.
Change Number	Corrects the phone number when it is not recognized (available during phone number entry).

Phone command

1st command	2nd command	3rd command	4th command	Action
Phone	Call <Name>	< 1–6 >		Makes a call to a contact that is stored on the cellular phone. Select from the list of displayed contacts on the right side screen.
	Dial <#>	Dial		Makes a call to a spoken phone number.
		Change Number		Changes the number to call.
	Recent Calls	< 1–6 >		Makes a call to the recent incoming, outgoing, or missed call number.
	Read Text	< 1–6 >	Play	Listens to recent text message received.
			Reply	Replies to received message.
			Call	Calls the sender of the message.
	Send Text	< phonebook name>		Selects a text message from the list and sends it to a contact name. You can select type from <Work>, <Mobile>, <Home>, or <Other>.
		< phonebook name>< type>		
	Phonebook	< phonebook name>		Makes a call to a contact that is stored on the cellular phone. You can select type from “Work”, “Mobile”, “Home”, or “Other”. Select “Reply” to reply to a message. Select “Call” to call the sender.
		< phonebook name>< type>		
	Favorites	< favorite name > < 1–6 >		Accesses frequently called contacts by storing them in the favorites list.
		< favorite name > < Type>		

1st command	2nd command	3rd command	4th command	Action
	Redial			Makes a call to the last outgoing phone number.
	International Call	< phone number >		Makes an international call by allowing more than 11 digits to be spoken. You may need to include the international call prefixes and country codes.
	Add Phone			Use this command to connect a compatible Bluetooth ® device to the system. Follow the on-screen instructions to complete the pairing process from your handset.
	Call < Name > Work	< 1–6 >		To call someone's work place, say the person's name stored in the phonebook on your cellular phone between "Call" and "Work".
	Call < Name > Cellular	< 1–6 >		To call someone's cellular phone, say the person's name stored in the phonebook on your cellular phone between "Call" and "Mobile".
	Call < Name > Home	< 1–6 >		To call someone's home, say the person's name stored in the phonebook on your cellular phone between "Call" and "Home".
	Call < Name > Other	< 1–6 >		To call someone at a place categorized as "Other", say the person's name stored in the phonebook on your cellular phone between "Call" and "Other".

NOTE:

The system can read out SMS text messages in voice. However, it cannot always read the text correctly.

Audio command

1st command	2nd command	3rd command	Action
Audio	FM <87.7–107.9>		Switches to the FM band, selecting the station of the preferred frequency.
	SXM <Channel#>		Switches to the SiriusXM Satellite Radio band, selecting the preferred channel.
	USB Play Album	<album name>	Turns on the USB mode, selecting the album.
	iPod Play Album	<album name>	Turns on the iPod® mode, selecting the album.
	AM <530–1710>		Switches to the AM band, selecting the preferred station.
	FM <87.7–107.9> HD <#>		Switches to the FM HD band, selecting the preferred station.
	DISC Track <#>		Turns on the CD, selecting the track number.
	USB Play Song < Name>		Switches to the USB, selecting the track. You can speak the commands successively.
	Play < Source Name>		Plays the spoken audio source.
	USB All Artists		Displays the USB all artists list.
	USB All Albums		Displays the USB all albums list.
	USB All Folders		Displays the USB all folders list.
	iPod All Artists		Displays the iPod® all artists list.
	iPod All Albums		Displays the iPod® all albums list.
	iPod All Songs		Displays the iPod® all songs list.

Notes on operating audio by Voice Recognition

- An audio device connected via Blutooth ® cannot be operated with the Voice Recognition system. Source change is only available for Bluetooth®streaming audio.
- Song title and Artist name information will be overwritten when another iPod®/iPhone® is connected after song titles and artists names in the previously connected iPod®/iPhone® have been installed.
- If two USB devices are connected at the same time, voice operation will only be available for use with one registered and selected device. When selecting “YES” in the pop-up screen that displays after a new USB audio device is connected, the USB audio device is registered in the Voice Recognition system and is selected automatically. One iPod® and one USB device can be registered in the system. If a USB audio device is newly registered, old data is overwritten. It may take a few moments to register an audio device. If you want to enable voice operation for music stored on a previously registered audio device, select the device you want to use in advance. For additional information, refer to the ″Voice Recognition settings″ in this section.

Even when a device has been previously registered, simply connecting the device will not result in it being selected automatically.

- The Voice Recognition system may not function when the song information is too long (artist names, album titles, song titles, and playlists, etc.)
- The SXM function will not operate without a subscription to SiriusXM Satellite Radio.

Information command

1st command	2nd command	Action
Information	Voice Menu	Connects to the Nissan Connect SM Apps Services Response Specialists. For additional information, refer to the Navigation System Owner's Manual for details.
	Fuel Prices	Displays the fuel prices.
	Weather Forecast	Displays the weather forecast.
	Current Weather	Displays the nearby weather (current weather).
	Sports Scores	Displays the sports scores.
	Traffic Information*	Turns the traffic information system on or off.
	Route Information*	Displays the route information.

*: Models with navigation system only.

NOTE:

The Fuel Prices, Weather Forecast, Current Weather, Sports Scores and Traffic Information will not operate without a subscription to SiriusXM Radio

VOICE RECOGNITION SETTINGS

Voice recognition functions can be set.

1. Press the SETTING button.
2. Touch the “Voice Recognition” key.
3. Touch the item you want to set.

Available settings

- “Minimize Voice Feedback” key:

Set the Minimize Voice Feedback function “ON” key (short feedback).

- “Audio Device Setting” key

Select an audio device to be operated via voice recognition system from the list of devices registered to the in-vehicle audio system. The device with an indicator light illuminated can be operated with voice recognition system.

CUSTOMER ASSISTANCE

For assistance or inquiries about NissanConnect^{SM}, or to order updated map data for the navigation system (where fitted), it is recommended that you contact a NISSAN dealer.

SYSTEM UNIT
Display screen

Symptom	Possible cause	Possible solution
The screen is too dark.	The cabin temperature is too low.	Wait until the cabin temperature becomes moderate.
	Screen brightness is set to the maximum darkness.	Adjust the brightness setting of the screen. For additional information, refer to “Screen settings” in this section.
The screen is too bright.	Screen brightness is set to the maximum brightness.	Adjust the brightness setting of the screen. For additional information, refer to “Screen settings” in this section.
A small black spot or a small bright spot appears on the screen.	This is a phenomenon typical to display screens.	This is not a malfunction.
A dot or stripe pattern appears on the screen.	Electromagnetic waves that are generated from neon billboards, high voltage electric power cables, ham radios or other radio devices equipped on other vehicles may adversely affect this screen.	This is not a malfunction.
Image lag appears on the screen.	This is a phenomenon typical to display screens.	This is not a malfunction.
Image motion displayed on the screen is slow.	The cabin temperature is below 32°F (0°C).	Wait until the in-cabin temperature rises to above 32°F (0°C).
When looking at the screen from an angle, the screen lightens or darkens.	This is a phenomenon typical to display screens.	Adjust the brightness setting of the screen. For additional information, refer to “Screen settings” in this section.
The screen turns blue or an error message is displayed on the display.	The SD card is not inserted into the slot correctly.	If the SD card containing map data is accidentally removed, after re-inserting the SD card containing map data into the slot, place the ignition switch in the OFF position and then back in the ON position again.
	A system malfunction has occurred.	It is recommended that you contact a NISSAN dealer for inspection.

HD Radio Technology

Sound:

Symptom	Possible cause	Possible solution
Delay in digital audio on HD Radio broadcasts.	The radio acquires an analog station first and blends to a digital signal.	This is not a malfunction.
Audio skip, stutter or echo.	The radio station has not properly aligned the digital and analog audio.	Verify correct operation on another station. Report any station with poor performance.
Volume changing up/down.	The radio station has not properly aligned digital and analog audio level.	Verify correct operation on another station and check www.hdradio.com for stations in the area. Report any station with poor performance.
Sound fading in and out.	The transition between analog and digital is taking place (blending).	Verify transition performance on several stations in the area. Report any station with poor performance.
Excessive blending (Transition between analog and digital).	The receiver is located near the edge of the digital coverage area.	Refer to www.hdradio.com to verify stations in your coverage area.
Digital audio not better than analog audio.	Audio processing on the digital audio at a station can potentially decrease the digital audio sound quality.	Verify correct operation on another station. Report any station with poor performance.

Functional:

Symptom	Possible cause	Possible solution
Keep losing my local stations.	The digital coverage is slightly less than the analog signal coverage.	Verify correct operation on another station. This is expected behavior.
	Shadowing (urban/terrain) can cause reduced digital coverage.	Verify correct operation on another station.
Some data fields are blank.	Text information is sent at the broadcaster's discretion.	Verify correct operation on another station. Report any station issues.
Text information is truncated / appears to be more available.	The display is limited to a fixed number of characters and more data is being sent than can be shown.	This is intended behavior.
AM reception changes at night.	AM stations are required by the government (FCC) to lower their power at night.	This is not a malfunction.

Compact Disc (CD) player

Symptom	Possible cause	Possible solution
Music cannot be played back.	The disc is inserted upside down.	Insert a CD with the label side facing up.
	Moisture has accumulated inside the unit.	Wait until the moisture evaporates (approximately 1 hour).
	The cabin temperature is too high.	Wait until the cabin temperature becomes moderate.
	The disc is scratched or dirty.	Wipe off any dirt from the disc. Scratched discs cannot be recovered. Replace the disc.
	Depending on the condition in which they are stored, discs may become unreadable due to deterioration (for example, keeping the discs in the passenger compartment, etc.).	Replace the disc with a deterioration-free disc. Do not use a deteriorated disc. The label surface of a disc may crack or chip, and the layer of the label surface may eventually peel off.

Symptom	Possible cause	Possible solution
Compressed audio files cannot be played back.	If both music CD files (CD-DA data) and compressed audio files (MP3 data, etc.) are mixed on one disc, the compressed audio files cannot be played back.	Prepare a disc that contains compressed audio files only.
	The files are not named using characters that are compliant with the specifications.	Use the character codes and the number of characters that are compliant with the specifications for the folder names and file names. In addition, always use “.MP3”, “.WMA”, “.mp3” or “.wma” file extensions.
It takes a long time before the music starts playing.	The disc contains a large amount of data.	Some time may be required to check the files. It is recommended that unnecessary folders or any files other than compressed audio files should not be recorded on a disc.
The sound quality is poor.	The disc is dirty.	Wipe off any dirt from the disc.
No sounds are played although the CD play time is displayed.	The system is playing the first track of a mix mode disc. (Mix mode is a format in which data except music is recorded on the first track and music data is recorded on one other than the first track in a session.)	Play music data in other tracks.
Music cuts off or skips.	The combination of writing software and hardware might not match; or the writing speed, writing depth, writing width, etc. might not match the specifications.	Create a disc using different writing speed settings, etc.
The system skips the selected track and moves to the next track.	A non-MP3/WMA file has been given an extension of “.MP3”, “.WMA”, “.mp3” or “.wma”.	Prepare MP3/WMA files.
	Some of the file cannot be played due to copyright protection.	Prepare playable files.
The tracks do not play back in the desired order.	The folder locations on the disc are changed by the writing software while the files are written on the disc.	Check the settings of the writing software and create a new disc.

iPod® player

Symptom	Possible cause	Possible solution
The system does not recognize an iPod®.	The connector cable is not correctly connected or the iPod® does not correctly operate.	Connect the connector cable again. If the system does not recognize the iPod® after performing the procedure above, reset the iPod®.
	The iPod® that is connected is not compatible with the system.	Check the iPod® model and firmware versions available for the system.
	The USB extension cable is not correctly connected.	Do not use a USB extension cable.
	The cable is rapidly connected to or disconnected from the USB connector.	Slowly connect or disconnect the USB cable.
An iPod® cannot be operated.	The iPod® is connected to the in-vehicle audio system while headsets, etc. are connected to the iPod®.	Remove all equipment from the iPod® after disconnecting the iPod® from the system, and then connect it to the system again.
	The iPod® is not operating normally.	Disconnect and re-connect the iPod® to the in-vehicle audio system.
	The system plays back an album/track that includes particular album art.	Disconnect the iPod® from the in-vehicle audio system and then reset the iPod®. Disable the album art and then re-connect the iPod® to the system.
An iPod® does not respond.	There are too many tracks in a category.	Decrease the number of tracks in a category (less than 3,000 tracks).
	The shuffle function is turned on.	Turn off the shuffle function if many tracks are stored on the iPod.
Music cannot be played back.	The connector is not connected to the iPod®.	Firmly connect the connector until it clicks.
Music stops playing.	The sound cuts off due to vibration resulting from the iPod® being in an unstable location.	Place the iPod® in a stable location where it does not roll over.
The sound is distorted.	The EQ (equalizer) function of the iPod® is turned on.	Turn off the EQ (equalizer) function.
The iPod® battery requires more time than usual to charge.	Charging the iPod® battery may take longer while the iPod® is playing.	If the iPod® requires charging, it is recommended to stop playback.

Symptom	Possible cause	Possible solution
An iPod® cannot be charged while connected to the system.	The cable connected to the iPod® may be deteriorated (cable disconnection, etc.).	Check the cable.
The connected iPod® cannot be operated with the in-vehicle system.	—	The operation of an iPod® must be performed using the in-vehicle audio system after the iPod® is connected to the system.
The sound skips.	Surrounding circumstances (noise, etc.) may cause the audio to skip.	This does not indicate a malfunction.
	The USB extension cable is not correctly connected.	Do not use a USB extension cable.

USB memory

Symptom	Possible cause	Possible solution
The system does not recognize a USB device.	A USB extension cable is used.	Do not use a USB extension cable.
	A USB hub is used.	Do not use a USB hub.
	Connection or disconnection operation of the USB device was too abrupt.	Connect or disconnect the USB device slowly.

Bluetooth® streaming audio

Symptom	Possible cause	Possible solution
Registration cannot be performed.	The Bluetooth® audio device is not compatible with the in-vehicle audio system.	Check the owner's manual for the Bluetooth® audio device.
	The PIN code is incorrect.	Check the PIN code for the Bluetooth® audio device that is to be registered.
		Check that the PIN code for the Bluetooth® audio device is consistent with that for the in-vehicle audio system.
	Another Bluetooth® device is used in the vehicle.	Turn off the other Bluetooth® device and wait until registration is completed.
Music cannot be played.	The Bluetooth® audio device is not compatible with the in-vehicle audio system.	Check the owner's manual for the Bluetooth® audio device.
	The system is not in the Bluetooth® audio mode.	Press the "AUDIO" button to select the Bluetooth® audio mode.
	The Bluetooth® adapter is turned off.	Turn on the Bluetooth® adapter when it is used for a Bluetooth® audio device.
Music stops playing.	The Bluetooth® audio device is not compatible with the in-vehicle audio system.	Visit www.nissanusa.com/bluetooth/ to search for a recommended Bluetooth® audio device.
	A cellular phone is connected.	This is not a malfunction.
	The sound may cut off when a Bluetooth® audio device is operated.	Press the "AUDIO" button to select the Bluetooth® audio mode, and then operate the device on the vehicle's display screen.
Audio operation cannot be performed.	A Bluetooth® audio device that does not support audio operations is in use.	This is not a malfunction. Refer to the owner's manual for the Bluetooth® audio device.
	An error occurs when connecting to a Bluetooth® audio profile.	Turn the power source of the Bluetooth® audio player off and on, and then resume connection with the system.

Symptom	Possible cause	Possible solution
A cellular phone cannot be registered.	The cellular phone is not compatible with the in-vehicle hands-free phone system.	Use a cellular phone compatible with the system. It is recommended that you visit the website www.nissanusa.com/bluetooth/ for model compatibility.
	Registration of the cellular phone has been performed incorrectly.	Check the registration procedure, and then register the cellular phone again.
A cellular phone cannot be connected or becomes disconnected after registration is complete.	The Bluetooth® setting of the in-vehicle hands-free phone system is turned off.	Turn on the Bluetooth® setting of the system.
	The Bluetooth® setting of the cellular phone is turned off.	Turn on the Bluetooth® setting of the cellular phone.
	The remaining battery level of the cellular phone is low.	Charge the battery of the cellular phone.
	The wireless Bluetooth® connection may be disrupted depending on the location of the cellular phone.	Do not place the cellular phone in an area surrounded by metal or far away from the in-vehicle hands-free phone system. Do not place the cellular phone close to the seats or your body.
	Registration of the cellular phone is not complete.	Perform registration of the cellular phone.
A call to a particular number fails.	If the system tries to make a call several times to the same phone number (for example: the party does not respond to the call, the party is out of the network service area, or the call is abandoned before the party responds), the system may reject a request to make a call to the phone number.	Turn the cellular phone off and then on again to reset the connection.

Symptom	Possible cause	Possible solution
The system does not recognize the connection of a cellular phone and cannot receive or make a call.	The cellular phone is not compatible with the in-vehicle hands-free phone system.	Use a cellular phone compatible with the system. It is recommended that you visit the website www.nissanusa.com/bluetooth/ for model compatibility.
	The cellular phone is not connected.	Check the registration procedure, and then register the cellular phone again.
	The phone operation is limited by the functions (such as dial lock, etc.) of the registered cellular phone.	Remove any settings that are limiting use of the cellular phone, and then perform registration again.
Registered voice tag is cut short.	Speaking of the voice tag did not fit within the 5 second recording period after the beep.	Speak the voice tag within 5 seconds after the beep.
The other party cannot hear your voice. The other party can hear your voice, but it cracks or cuts out.	The cellular phone is not connected.	Check the registration procedure, and then register the cellular phone again.
	The fan speed of the air conditioner is too fast.	Decrease the fan speed of the air conditioner.
	The ambient noise level is excessive. (For example: heavy rain, construction sites, inside a tunnel, oncoming vehicles, etc.)	Close the windows to shut out ambient noise.
	The noise generated by driving the vehicle is too loud.	Reduce the vehicle speed, and then speak a command.
	The incoming or outgoing voice level is too loud.	Adjust the incoming or outgoing voice level properly.
The voice is cut out or noise is heard during a call.	The wireless Bluetooth® connection may be disrupted depending on the location of the cellular phone.	Do not place the cellular phone in an area surrounded by metal or far away from the in-vehicle hands-free phone system. Do not place a cellular phone close to the seats or your body.
When a cellular phone is operated to make a call, the hands-free function is no longer available.	Some models of a cellular phone do not switch to the hands-free mode when they are operated to make a call.	This is not a malfunction. Make a call again using the hands-free function.
The other party's voice cannot be heard. There is no ringtone.	The volume level is set to the minimum.	Adjust the volume level.
	A cellular phone is not connected.	Check the registration procedure, and then register the cellular phone again.
Each volume level (ringtone, incoming voice or outgoing voice) is different.	Each volume level is not adjusted properly.	Adjust each volume level properly.

Symptom	Possible cause	Possible solution
The antenna display is different between the vehicle screen and the screen on a cellular phone. Making or receiving a call is unavailable even though the antenna display indicates that it is possible to do so.	The antenna display varies depending on the model of cellular phone.	This does not indicate a malfunction. The antenna display and remaining battery level shown on the navigation screen may be different from those shown on the cellular phone screen. Use them as a reference.
A voice cannot be heard clearly when using a cellular phone behind tall buildings.	Some structures such as tall buildings, etc. may cause irregular reflection of radio waves or completely shut out radio waves that are used for cellular phones.	This is not a malfunction.
Noise is heard when using a cellular phone under/near areas of elevated railroads, high voltage electric power cables, traffic signals, or neon billboards, etc.	Electromagnetic waves that are generated from radio devices may adversely affect the cellular phone.	This is not a malfunction.
Noise is heard in the sound from the audio system while using a cellular phone.	Radio waves that are generated from a cellular phone may adversely affect the sound from the audio system.	This is not a malfunction.
The sound skips.	The cellular phone may have turned on the wireless LAN (Wi-Fi).	Turn off the wireless LAN (Wi-Fi).
Phonebook cannot be downloaded.	An error occurred during the phone pairing process.	Re-register the Bluetooth® pairing information after deleting the pairing information from both the cellular phone and the vehicle system.

VOICE RECOGNITION

Symptom	Possible cause	Possible solution
The system does not operate or fails to interpret the command correctly.	The interior of the vehicle is too noisy.	Close the windows or make sure that the other occupants are quiet.
	The fan speed of the air conditioner is too fast.	Decrease the fan speed of the air conditioner.
	The noise generated by driving the vehicle is too loud.	Reduce the vehicle speed, and then speak the command.
	The voice command is spoken in a low voice.	Speak the command in a louder voice.
	The command is spoken too fast.	Speak the command after confirming the following: voice guidance is announced, a tone sounds, and an icon on the screen changes from white to orange.
	The command is spoken too slowly.	Speak in a natural voice without pausing between words.
The system prompts to repeat a command.	Pronunciation is unclear.	Speak clearly.
	The command is spoken too late after the tone.	Speak the command within 5 seconds after confirming the following: a voice guidance is announced, a tone sounds, and an icon on the screen changes from white to orange.
	An improper command is spoken.	Speak the command or a number that is displayed in white on the screen.
		Speak a command that is shown in the command list.
The system does not correctly recognize a number spoken.	Many numbers are spoken at once.	Place a pause between the appropriate digits for correct recognition by the system. When speaking a telephone number, place a pause between area codes and dial codes, etc.
Voice Recognition does not operate, and a tone sounds twice after pushing the switch.	The switch is pushed before the system is ready to accept voice commands.	After turning on NissanConnect[SM], wait for the Voice Recognition system to be ready before giving voice commands.

Symptom	Possible cause	Possible solution
The USB memory device cannot operate with Voice Recognition.	Depending on the device, an iPhone® or iPod® may be recognized as a USB memory device.	This is not a malfunction.
	More than one audio device is connected to the USB port.	Only one audio device can be operated with the Voice Recognition system even when multiple numbers of devices are connected. Select an audio source to operate with the Voice Recognition system.
The USB/iPod® operation screen is grayed out.	The audio device is not connected.	Connect an audio device to the system.
	An audio source to be operated with the Voice Recognition system has not been selected.	Select an audio source to be operated with the Voice Recognition system.
An error message is displayed when trying to select a track and operate the USB/iPod®.	The track information is being processed for registration by the system.	Song information will be loaded into the system when a new audio device is registered for the first time or when the song information in the pre-registered device has been changed. Wait for the loading to complete (this may take from a few minutes up to an hour).
	The number of songs stored on the connected audio device exceeds its capacity.	Decrease the number of songs stored on the audio device.
	No song is stored on the audio device.	Store songs on the connected audio device. Storing songs with information such as artist name, album name, song name, and playlist, etc. will make Voice Recognition song search available.
The Navigation item is not displayed in the voice operation menu screen.	Voice Recognition command preparation for the navigation system is not completed immediately after the system is started.	Display any screen other than the Voice Recognition screen, and then push the switch.
The system does not correctly recognize a Point of Interest (POI) name spoken.	There are some rare cases where a POI is unavailable by Voice Recognition but the location can be found on the map.	This is not a malfunction. Consider using an alternative search method, like street address.
	Partial or alias name is spoken.	For best results, speak the full name.
	Some POI category names can only be searched when nearby.	This is not a malfunction.

NissanConnect℠ uses an operating system like those found on many computers, tablets and cell phones. Like these devices, processing speed may vary, and system response delays or resets may occur intermittently. This does not indicate a malfunction, and further information on system operation can be found below.

System Start-Up

Due to the large number of features and capabilities that the NissanConnect℠ needs to load on start-up, it may take up to a minute for all functions (such as Apps) to be available. The system will display "Now Loading All Apps..." during this time.

System Response Delay

NissanConnect℠ uses an operating system like those found on many computers, tablets and cell phones. Like these devices, sometimes programs do not respond immediately and this may temporarily delay system use.

In most situations, simply waiting a few moments longer should be sufficient for the pending operations to complete.

If the system temporarily does not respond to commands, the system can be easily reset. Simply push down the VOL/ON-OFF knob for at least 5 seconds. The system will turn off and restart.

After restart, all functions should be available.

If a navigation route was set, the route should resume automatically.

System Reset

As noted above, intermittent system resets may occur during normal operation. You may also wish to reset the system if you find that a particular feature is not loading or responding. Often, a quick system reset will resolve any issue you may be experiencing. After restart, all functions will be available as described above.

System Updates

Like many digital devices, the NissanConnect℠ is designed to allow for software updates as enhancements are developed and additional features added. If you have questions about system performance, it is recommended that you contact a NISSAN dealer to ensure that your vehicle has had the latest available software installed.

Operating Tips

NissanConnect℠ provides several methods of operation to suit your preferences. The following are suggested operating tips.

- Operating the multi-function controller steering wheel controls, or other controls too quickly can cause a lag between the control and the display. Operate the controls carefully and allow the system to respond to your request.
- NISSAN recommends using Voice Recognition whenever possible to select options while driving. Some touch-screen functionality is intentionally unavailable during driving. Please view the available voice commands by pushing the (TALK) switch and then selecting a category on the display.
- When looking for a street address or Points of Interest (POI), remember that you can use Connected Search and Assisted Search features within NissanConnect℠ Services to expand your search methods and results. The Voice Recognition system recognizes a defined set of commands. These commands can be viewed in the display by pushing the (TALK) switch and then selecting a category from the displayed list. The commands can also be found in the Voice Recognition section under command list. For additional information, refer to "Command list" in this section.

- In some situations, the system may not be able to recognize your command even if you say the exact command. This can be due to noise conditions or an accent.
- In some unique cases, the system may expect a word to be spoken as it is spelled as opposed to the way it is normally pronounced.

ADDITIONAL HELP

For additional technical information, it is recommended that you contact us online at OWNERS.www.nissanusa.com or call us at 1–855–426–6628.

MEMO

5 Starting and driving

Precautions when starting and driving 5-2
Exhaust gas (carbon monoxide) 5-2
Three-way catalyst 5-2
Tire Pressure Monitoring System (TPMS) 5-3
On-pavement and off-road driving precautions 5-6
Avoiding collision and rollover 5-7
Off-road recovery 5-7
Rapid air pressure loss 5-7
Drinking alcohol/drugs and driving 5-8
Driving safety precautions 5-8
Push-Button Ignition Switch 5-10
Operating range 5-11
Push-button ignition switch positions 5-12
Emergency engine shut off 5-12
NISSAN Intelligent Key® battery discharge 5-13
NISSAN Vehicle Immobilizer System 5-13
Before starting the engine 5-14
Starting the engine 5-14
Remote engine start (if so equipped) 5-15
Driving the vehicle 5-15
Continuously Variable Transmission (CVT) 5-15
Parking brake 5-19
Blind Spot Warning (BSW) (if so equipped) 5-20
BSW system operation 5-21
How to enable/disable the BSW system 5-22
BSW system limitations 5-23
BSW driving situations 5-24
System temporarily unavailable 5-27
System maintenance 5-28
Rear Cross Traffic Alert (RCTA) (if so equipped) 5-29
RCTA system operation 5-30
How to enable/disable the RCTA system 5-32
RCTA system limitations 5-33
System temporarily unavailable 5-36
System maintenance 5-37
Cruise control (if so equipped) 5-38
Precautions on cruise control 5-38
Cruise control operations 5-39
Intelligent Cruise Control (ICC) (if so equipped) 5-40
ICC system operation 5-41
The ICC switch 5-43
ICC system limitations 5-48
System temporarily unavailable 5-51
System maintenance 5-53
Forward Emergency Braking (FEB) (if so equipped) . . 5-54

FEB system operation 5-55
Turning the FEB system on/off 5-57
FEB system limitations 5-57
System temporarily unavailable 5-58
System malfunction 5-59
System maintenance 5-59
Break-in schedule 5-60
Fuel efficient driving tips 5-61
Increasing fuel economy 5-62
Intelligent 4WD (if so equipped) 5-62
4x4–i system operation 5-62
Parking/parking on hills 5-66
Power steering 5-67
Brake system 5-67
Brake precautions 5-67
Anti-lock Braking System (ABS) 5-68
Brake assist 5-69
Vehicle Dynamic Control (VDC) system 5-69
Rise-up and build-up 5-71
Brake force distribution 5-71
Hill Descent Control System (if so equipped) 5-72
Hill start assist system 5-73
Rear sonar system (RSS) (if so equipped) 5-73
Cold weather driving 5-74
Freeing a frozen door lock 5-74
Antifreeze 5-74
Battery 5-74
Draining of coolant water 5-74
Tire equipment 5-75
Special winter equipment 5-75
Driving on snow or ice 5-75
Engine block heater (if so equipped) 5-75

⚠WARNING

- **Do not leave children or adults who would normally require the assistance of others alone in your vehicle. Pets should also not be left alone. They could accidentally injure themselves or others through inadvertent operation of the vehicle. Also, on hot, sunny days, temperatures in a closed vehicle could quickly become high enough to cause severe or possibly fatal injuries to people or animals.**
- **Properly secure all cargo with ropes or straps to help prevent it from sliding or shifting. Do not place cargo higher than the seatbacks. In a sudden stop or collision, unsecured cargo could cause personal injury.**

EXHAUST GAS (carbon monoxide)

⚠WARNING

- **Do not breathe exhaust gases; they contain colorless and odorless carbon monoxide. Carbon monoxide is dangerous. It can cause unconsciousness or death.**
- **If you suspect that exhaust fumes are entering the vehicle, drive with all windows fully open, and have the vehicle inspected immediately.**
- **Do not run the engine in closed spaces such as a garage.**
- **Do not park the vehicle with the engine running for any extended length of time.**
- **Keep the rear vent windows, liftgates, doors and trunk lids (if so equipped) closed while driving, otherwise exhaust gases could be drawn into the passenger compartment. If you must drive with one of these open, follow these precautions:**
  1. **Open all the windows.**
  2. **Set the air recirculation button to off and the fan control dial to high to circulate the air.**
- **If electrical wiring or other cable connections must pass to a trailer through the seal on the liftgate or the body, follow the manufacturer's recommendation to prevent carbon monoxide entry into the vehicle.**
- **The exhaust system and body should be inspected by a qualified mechanic whenever:**
  a. **The vehicle is raised for service.**
  b. **You suspect that exhaust fumes are entering into the passenger compartment.**
  c. **You notice a change in the sound of the exhaust system.**
  d. **You have had an accident involving damage to the exhaust system, underbody, or rear of the vehicle.**

THREE-WAY CATALYST

The three-way catalyst is an emission control device installed in the exhaust system. Exhaust gases in the three-way catalyst are burned at high temperatures to help reduce pollutants.

⚠WARNING

- **The exhaust gas and the exhaust system are very hot. Keep people, animals or flammable materials away from the exhaust system components.**
- **Do not stop or park the vehicle over flammable materials such as dry grass, waste paper or rags. They may ignite and cause a fire.**

⚠ CAUTION

- **Do not use leaded gasoline. Deposits from leaded gasoline will seriously reduce the three-way catalyst's ability to help reduce exhaust pollutants.**
- **Keep your engine tuned up. Malfunctions in the ignition, fuel injection, or electrical systems can cause overrich fuel flow into the three-way catalyst, causing it to overheat. Do not keep driving if the engine misfires, or if noticeable loss of performance or other unusual operating conditions are detected. Have the vehicle inspected promptly. It is recommended that you visit a NISSAN dealer for this service.**
- **Avoid driving with an extremely low fuel level. Running out of fuel could cause the engine to misfire, damaging the three-way catalyst.**
- **Do not race the engine while warming it up.**
- **Do not push or tow your vehicle to start the engine.**

TIRE PRESSURE MONITORING SYSTEM (TPMS)

Each tire, including the spare (if provided), should be checked monthly when cold and inflated to the inflation pressure recommended by the vehicle manufacturer on the vehicle placard or tire inflation pressure label. (If your vehicle has tires of a different size than the size indicated on the vehicle placard or tire inflation pressure label, you should determine the proper tire inflation pressure for those tires.)

As an added safety feature, your vehicle has been equipped with a Tire Pressure Monitoring System (TPMS) that illuminates a low tire pressure telltale when one or more of your tires is significantly under-inflated. Accordingly, when the low tire pressure telltale illuminates, you should stop and check all four tires as soon as possible, and inflate them to the proper pressure. Driving on a significantly under-inflated tire causes the tire to overheat and can lead to tire failure. Under-inflation also reduces fuel efficiency and tire tread life, and may affect the vehicle's handling and stopping ability.

Please note that the TPMS is not a substitute for proper tire maintenance, and it is the driver's responsibility to maintain correct tire pressure, even if under-inflation has not reached the level to trigger illumination of the TPMS low tire pressure telltale.

Your vehicle has also been equipped with a TPMS malfunction indicator to indicate when the system is not operating properly. The TPMS malfunction indicator is combined with the low tire pressure telltale. When the system detects a malfunction, the telltale will flash for approximately one minute and then remain continuously illuminated. This sequence will continue upon subsequent vehicle start-ups as long as the malfunction exists. When the malfunction indicator is illuminated, the system may not be able to detect or signal low tire pressure as intended. TPMS malfunctions may occur for a variety of reasons, including the installation of replacement or alternate tires or wheels on the vehicle that prevent the TPMS from functioning properly. Always check the TPMS malfunction telltale after replacing one or more tires or wheels on your vehicle to ensure that the replacement or alternate tires and wheels allow the TPMS to continue to function properly.

Additional information:

- Since the spare tire is not equipped with the TPMS, the TPMS does not monitor the tire pressure of the spare tire.

- The TPMS will activate only when the vehicle is driven at speeds above 16 mph (25 km/h). Also, this system may not detect a sudden drop in tire pressure (for example, a flat tire while driving).
- The low tire pressure warning light does not automatically turn off when the tire pressure is adjusted. After the tire is inflated to the recommended pressure, the vehicle must be driven at speeds above 16 mph (25 km/h) to activate the TPMS and turn off the low tire pressure warning light. Use a tire pressure gauge to check the tire pressure.
- The “Tire Pressure Low - Add Air” warning appears in the vehicle information display when the low tire pressure warning light is illuminated and low tire pressure is detected. The “Tire Pressure Low - Add Air” warning turns off when the low tire pressure warning light turns off.
- The “Tire Pressure Low - Add Air” warning appears each time the ignition switch is placed in the on position as long as the low tire pressure warning light remains illuminated.
- The “Tire Pressure Low - Add Air” warning does not appear if the low tire pressure warning light illuminates to indicate a TPMS malfunction.
- Tire pressure rises and falls depending on the heat caused by the vehicle’s operation and the outside temperature. Do not reduce the tire pressure after driving because the tire pressure rises after driving. Low outside temperature can lower the temperature of the air inside the tire which can cause a lower tire inflation pressure. This may cause the low tire pressure warning light to illuminate. If the warning light illuminates, check the tire pressure for all four tires.
- The Tire and Loading Information label is located in the driver’s door opening.
- You can also check the pressure of all tires (except the spare tire) on the vehicle information display screen. The order of the tire pressure figures displayed on the screen corresponds with the actual order of the tire position.

For additional information, refer to “Low tire pressure warning light” in the “Instruments and controls” section and “Tire Pressure Monitoring System (TPMS)” in the “In case of emergency” section of this manual.

⚠ WARNING

- **Radio waves could adversely affect electric medical equipment. Those who use a pacemaker should contact the electric medical equipment manufacturer for the possible influences before use.**
- **If the low tire pressure warning light illuminates while driving, avoid sudden steering maneuvers or abrupt braking, reduce vehicle speed, pull off the road to a safe location and stop the vehicle as soon as possible. Driving with underinflated tires may permanently damage the tires and increase the likelihood of tire failure. Serious vehicle damage could occur and may lead to an accident and could result in serious personal injury. Check the tire pressure for all four tires. Adjust the tire pressure to the recommended COLD tire pressure shown on the Tire and Loading Information label to turn the low tire pressure warning light off. If you have a flat tire, replace it with a spare tire as soon as possible. (For additional information, refer to “Flat tire” in the “In case of emergency” section for changing a flat tire.)**

- **Since the spare tire is not equipped with the TPMS, when a spare tire is mounted or a wheel is replaced, tire pressure will not be indicated, the TPMS will not function and the low tire pressure warning light will flash for approximately 1 minute. The light will remain on after 1 minute. Have your tires replaced and/or TPMS system reset as soon as possible. It is recommended that you visit a NISSAN dealer for this service.**
- **Replacing tires with those not originally specified by NISSAN could affect the proper operation of the TPMS.**
- **Do not inject any tire liquid or aerosol tire sealant into the tires, as this may cause a malfunction of the tire pressure sensors.**

⚠ CAUTION

- **The TPMS may not function properly when the wheels are equipped with tire chains or the wheels are buried in snow.**
- **Do not place metalized film or any metal parts (antenna, etc.) on the windows. This may cause poor reception of the signals from the tire pressure sensors, and the TPMS will not function properly.**

Some devices and transmitters may temporarily interfere with the operation of the TPMS and cause the low tire pressure warning light to illuminate.

Some examples are:

- Facilities or electric devices using similar radio frequencies are near the vehicle.
- If a transmitter set to similar frequencies is being used in or near the vehicle.
- If a computer (or similar equipment) or a DC/AC converter is being used in or near the vehicle.

The low tire pressure warning light may illuminate in the following cases.

- If the vehicle is equipped with a wheel and tire without TPMS.
- If the TPMS has been replaced and the ID has not been registered.
- If the wheel is not originally specified by NISSAN.

FCC Notice:

For USA:

This device complies with Part 15 of the FCC Rules. Operation is subject to the following two conditions: (1) This device may not cause harmful interference, and (2) this device must accept any interference received, including interference that may cause undesired operation.

NOTE:

Changes or modifications not expressly approved by the party responsible for compliance could void the user's authority to operate the equipment.

For Canada:

This device complies with Industry Canada licence-exempt RSS standard(s). Operation is subject to the following two conditions: (1) this device may not cause interference, and (2) this device must accept any interference, including interference that may cause undesired operation of the device.

TPMS with Easy-Fill Tire Alert

When adding air to an under-inflated tire, the TPMS with Easy-Fill Tire Alert provides visual and

audible signals outside the vehicle to help you inflate the tires to the recommended COLD tire pressure.

Vehicle set-up

1. Park the vehicle in a safe and level place.
2. Apply the parking brake and place the shift lever to the P (Park) position.
3. Place the ignition switch to the ON position. Do not start the engine.

Operation

1. Add air to the tire.
2. After a few seconds, the hazard indicators will start flashing.
3. When the designated pressure is reached, the horn beeps once and the hazard indicators stop flashing.
4. Perform the above steps for each tire.
   - If the tire is over-inflated more than approximately 4 psi (30 kPa), the horn beeps and the hazard indicators flash three times. To correct the pressure, push the core of the valve stem on the tire briefly to release pressure. When the pressure reaches the designated pressure, the horn beeps once.
   - If the hazard indicator does not flash within approximately 15 seconds after starting to inflate the tire, it indicates that the Easy-Fill Tire Alert is not operating.
   - The TPMS will not activate the Easy-Fill Tire Alert under the following conditions:
     - If there is interference from an external device or transmitter.
     - The air pressure from the inflation device is not sufficient to inflate the tire.
     - There is a malfunction in the TPMS system.
     - There is a malfunction in the horn or hazard indicators.
     - The identification code of the tire pressure sensor is not registered to the system.
     - The battery of the tire pressure sensor is low.
   - If the Easy-Fill Tire Alert does not operate due to TPMS interference, move the vehicle about 3 ft (1 m) backward or forward and try again.

If the Easy-Fill Tire Alert is not working, use a tire pressure gauge.

ON-PAVEMENT AND OFF-ROAD DRIVING PRECAUTIONS

Utility vehicles have a significantly higher rollover rate than other types of vehicles.

They have higher ground clearance than passenger cars to make them capable of performing in a variety of on-pavement and off-road applications. This gives them a higher center of gravity than ordinary vehicles. An advantage of higher ground clearance is a better view of the road, allowing you to anticipate problems. However, they are not designed for cornering at the same speeds as conventional 2-wheel drive vehicles any more than low-slung sports cars are designed to perform satisfactorily under off-road conditions. If at all possible, avoid sharp turns at high speeds. As with other vehicles of this type, failure to operate this vehicle correctly may result in loss of control or vehicle rollover. In a rollover crash, an unbelted person is significantly more likely to die than a person wearing a seat belt.

For additional information, refer to “Driving safety precautions” in this section.

AVOIDING COLLISION AND ROLLOVER

⚠WARNING

Failure to operate this vehicle in a safe and prudent manner may result in loss of control or an accident.

Be alert and drive defensively at all times. Obey all traffic regulations. Avoid excessive speed, high speed cornering, or sudden steering maneuvers, because these driving practices could cause you to lose control of your vehicle.

As with any vehicle, loss of control could result in a collision with other vehicles or objects or cause the vehicle to roll over, particularly if the loss of control causes the vehicle to slide sideways.

Be attentive at all times, and avoid driving when tired. Never drive when under the influence of alcohol or drugs (including prescription or over-the-counter drugs which may cause drowsiness). Always wear your seat belt as outlined in the "Safety – Seats, seat belts and supplemental restraint system" section of this manual, and also instruct your passengers to do so.

Seat belts help reduce the risk of injury in collisions and rollovers. **In a rollover crash, an unbelted or improperly belted person is significantly more likely to be injured or killed than a person properly wearing a seat belt.**

OFF-ROAD RECOVERY

While driving, the right side or left side wheels may unintentionally leave the road surface. If this occurs, maintain control of the vehicle by following the procedure below. Please note that this procedure is only a general guide. The vehicle must be driven as appropriate based on the conditions of the vehicle, road and traffic.

1. Remain calm and do not overreact.
2. Do not apply the brakes.
3. Maintain a firm grip on the steering wheel with both hands and try to hold a straight course.
4. When appropriate, slowly release the accelerator pedal to gradually slow the vehicle.
5. If there is nothing in the way, steer the vehicle to follow the road while vehicle speed is reduced. Do not attempt to drive the vehicle back onto the road surface until vehicle speed is reduced.
6. When it is safe to do so, gradually turn the steering wheel until both tires return to the road surface. When all tires are on the road surface, steer the vehicle to stay in the appropriate driving lane.
   - If you decide that it is not safe to return the vehicle to the road surface based on vehicle, road or traffic conditions, gradually slow the vehicle to a stop in a safe place off the road.

RAPID AIR PRESSURE LOSS

Rapid air pressure loss or a "blow-out" can occur if the tire is punctured or is damaged due to hitting a curb or pothole. Rapid air pressure loss can also be caused by driving on under-inflated tires.

Rapid air pressure loss can affect the handling and stability of the vehicle, especially at highway speeds.

Help prevent rapid air pressure loss by maintaining the correct air pressure and visually inspect the tires for wear and damage. For additional information, refer to "Wheels and tires" in the "Do-it-yourself" section of this manual. If a tire rapidly loses air pressure or "blows-out" while driving, maintain control of the vehicle by following the procedure below. Please note that this procedure is only a general guide. The vehicle must be driven as appropriate based on the conditions of the vehicle, road and traffic.

⚠WARNING

The following actions can increase the chance of losing control of the vehicle if there is a sudden loss of tire air pressure. Losing control of the vehicle may cause a collision and result in personal injury.

- **The vehicle generally moves or pulls in the direction of the flat tire.**
- **Do not rapidly apply the brakes.**
- **Do not rapidly release the accelerator pedal.**
- **Do not rapidly turn the steering wheel.**

1. Remain calm and do not overreact.
2. Maintain a firm grip on the steering wheel with both hands and try to hold a straight course.
3. When appropriate, slowly release the accelerator pedal to gradually slow the vehicle.
4. Gradually steer the vehicle to a safe location off the road and away from traffic if possible.
5. Lightly apply the brake pedal to gradually stop the vehicle.
6. Turn on the hazard warning flashers and contact a roadside emergency service to change the tire. For additional information, refer to “Changing a flat tire” in the “In case of emergency” section of this manual.

DRINKING ALCOHOL/DRUGS AND DRIVING

⚠WARNING

Never drive under the influence of alcohol or drugs. Alcohol in the bloodstream reduces coordination, delays reaction time and impairs judgement. Driving after drinking alcohol increases the likelihood of being involved in an accident injuring yourself and others. Additionally, if you are injured in an accident, alcohol can increase the severity of the injury.

NISSAN is committed to safe driving. However, you must choose not to drive under the influence of alcohol. Every year thousands of people are injured or killed in alcohol-related collisions. Although the local laws vary on what is considered to be legally intoxicated, the fact is that alcohol affects all people differently and most people underestimate the effects of alcohol.

Remember, drinking and driving don’t mix! That is true for drugs (over-the-counter, prescription) and illegal drugs, too. Don’t drive if your ability to operate your vehicle is impaired by alcohol, drugs, or some other physical condition.

DRIVING SAFETY PRECAUTIONS

Your NISSAN is designed for both normal and off-road use. However, avoid driving in deep water or mud as your NISSAN is mainly designed for leisure use, unlike a conventional off-road vehicle.

Remember that 2-wheel drive models are less capable than 4-wheel drive models for rough road driving and extrication when stuck in deep snow or mud, or the like.

Please observe the following precautions:

⚠WARNING

- **Spinning the front wheels on slippery surface may cause the 4WD warning message to display and the 4WD system to automatically switch from the 4WD to the 2WD mode. This could reduce the traction. Be especially careful when towing a trailer. (4WD models)**
- **Drive carefully when off the road and avoid dangerous areas. Every person who drives or rides in this vehicle should be seated with their seat belt fastened. This will keep you and your passengers in position when driving over rough terrain.**

- **Do not drive across steep slopes. Instead drive either straight up or straight down the slopes. Off-road vehicles can tip over sideways much more easily than they can forward or backward.**
- **Many hills are too steep for any vehicle. If you drive up them, you may stall. If you drive down them, you may not be able to control your speed. If you drive across them, you may roll over.**
- **Do not shift gears while driving on downhill grades as this could cause loss of control of the vehicle.**
- **Stay alert when driving to the top of a hill. At the top there could be a drop-off or other hazard that could cause an accident.**
- **If your engine stalls or you cannot make it to the top of a steep hill, never attempt to turn around. Your vehicle could tip or roll over. Always back straight down in R (Reverse) gear and apply brakes to control your speed.**
- **Heavy braking going down a hill could cause your brakes to overheat and fade, resulting in loss of control and an accident. Apply brakes lightly and use a low gear to control your speed.**
- **Unsecured cargo can be thrown around when driving over rough terrain. Properly secure all cargo so it will not be thrown forward and cause injury to you or your passengers.**
- **Secure heavy loads in the cargo area as far forward and as low as possible. Do not equip the vehicle with tires larger than specified in this manual. This could cause your vehicle to roll over.**
- **Do not grip the inside or spokes of the steering wheel when driving off-road. The steering wheel could move suddenly and injure your hands. Instead drive with your fingers and thumbs on the outside of the rim.**
- **Before operating the vehicle, ensure that the driver and all passengers have their seat belts fastened.**
- **Always drive with the floor mats in place as the floor may become hot.**
- **Lower your speed when encountering strong crosswinds. With a higher center of gravity, your NISSAN is more affected by strong side winds. Slower speeds ensure better vehicle control.**
- **Do not drive beyond the performance capability of the tires, even with 4WD engaged.**
- **For 4WD equipped vehicles, do not attempt to raise two wheels off the ground and shift the transmission to any drive or reverse position with the engine running. Doing so may result in drivetrain damage or unexpected vehicle movement which could result in serious vehicle damage or personal injury.**
- **Do not attempt to test a 4WD equipped vehicle on a 2-wheel dynamometer (such as the dynamometers used by some states for emissions testing), or similar equipment even if the other two wheels are raised off the ground. Make sure you inform test facility personnel that your vehicle is equipped with 4WD before it is placed on a dynamometer. Using the wrong test equipment may result in drivetrain damage or unexpected vehicle movement which could result in serious vehicle damage or personal injury.**
- **When a wheel is off the ground due to an unlevel surface, do not spin the wheel excessively.**

- **Accelerating quickly, sharp steering maneuvers or sudden braking may cause loss of control.**
- **If at all possible, avoid sharp turning maneuvers, particularly at high speeds. Your NISSAN vehicle has a higher center of gravity than a passenger car. The vehicle is not designed for cornering at the same speeds as passenger cars.**
- **Failure to operate this vehicle correctly could result in loss of control and/or a rollover accident.**
- **Always use tires of the same type, size, brand, construction (bias, bias-belted, or radial), and tread pattern on all four wheels. Install tire chains on the front wheels when driving on slippery roads and drive carefully.**
- **Be sure to check the brakes immediately after driving in mud or water. For additional information, refer to "Brake system" in this section.**
- **Avoid parking your vehicle on steep hills. If you get out of the vehicle and it rolls forward, backward or sideways, you could be injured.**
- **Whenever you drive off-road through sand, mud or water as deep as the wheel hub, more frequent maintenance may be required. For additional information, refer to "Severe driving conditions" in the "Maintenance and schedules" section of this manual.**

⚠ WARNING

Do not operate the push-button ignition switch while driving the vehicle except in an emergency. (The engine will stop when the ignition switch is pushed three consecutive times in quick succession or the ignition switch is pushed and held for more than 2 seconds.) If the engine stops while the vehicle is being driven, this could lead to a crash and serious injury.

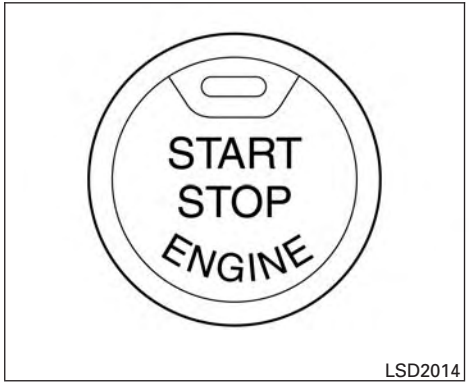

LSD2014

When the ignition switch is pushed without depressing the brake pedal, the ignition switch will illuminate.

Push the ignition switch center:

- Once to change to ACC.
- Two times to change to ON.
- Three times to return to OFF.

The ignition switch will automatically return to the LOCK position when any door is either opened or closed with the switch in the OFF position.

The ignition lock is designed so that the ignition switch position cannot be switched to OFF until the shift lever is moved to the P (Park) position.

When the ignition switch cannot be pushed toward the OFF position, proceed as follows:

1. Move the shift lever into the P (Park) position.
2. Push the ignition switch. The ignition switch position will change to the ON position.
3. Push the ignition switch again to the OFF position.

The shift lever can be moved from the P (Park) position if the ignition switch is in the ON position and the brake pedal is depressed.

If the battery of the vehicle is discharged, the push-button ignition switch cannot be moved from the LOCK position.

Some indicators and warnings for operation are displayed on the vehicle information display. For additional information, refer to “Vehicle information display” in the “Instruments and controls” section of this manual.

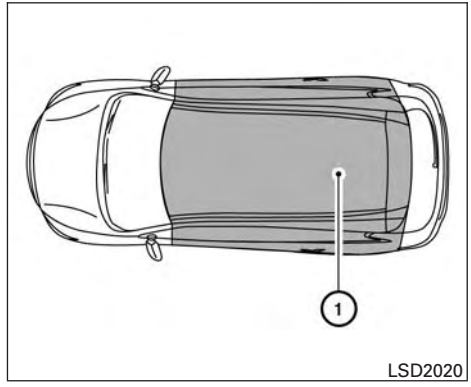

LSD2020

OPERATING RANGE

The Intelligent Key functions can only be used when the Intelligent Key is within the specified operating range.

When the Intelligent Key battery is almost discharged or strong radio waves are present near the operating location, the Intelligent Key system’s operating range becomes narrower and may not function properly.

If the Intelligent Key is within the operating range, it is possible for anyone, even someone who does not carry the Intelligent Key, to push the ignition switch to start the engine.

The operating range of the engine start function is inside of the vehicle ①.

- The luggage area is not included in the operating range, but the Intelligent Key may function.
- If the Intelligent Key is placed on the instrument panel, inside the glove box, storage bin or door pocket, the Intelligent Key may not function.
- If the Intelligent Key is placed near the door or window outside the vehicle, the Intelligent Key may function.

PUSH-BUTTON IGNITION SWITCH POSITIONS

LOCK (Normal parking position)

The ignition switch can only be locked in this position.

The ignition switch will be unlocked when it is pushed to the ACC position while carrying the Intelligent Key.

The ignition switch will lock when any door is opened or closed with the ignition switched off.

ACC (Accessories)

This position activates electrical accessories, such as the radio, when the engine is not running.

ACC has a battery saver feature that will turn the ignition switch to the OFF position after a period of time under the following conditions:

- All doors are closed.
- Shift lever is in P (Park).

The battery saver feature will be canceled if any of the following occur:

- Any door is opened.
- Shift lever is moved out of P (Park).
- Ignition switch changes position.

ON (Normal operating position)

This position turns on the ignition system and electrical accessories.

ON has a battery saver feature that will turn the ignition switch to the OFF position, if the vehicle is not running, after some time under the following conditions:

- All doors are closed.
- Shift lever is in P (Park).

The battery saver feature will be canceled if any of the following occur:

- Any door is opened.
- Shift lever is moved out of the P (Park) position.
- Ignition switch changes position.

⚠ CAUTION

Do not leave the vehicle with the ignition switch in ACC or ON positions when the engine is not running for an extended period. This can discharge the battery.

OFF

The ignition switch is in the OFF position when the engine is turned off using the ignition switch. No lights will illuminate on the ignition switch.

EMERGENCY ENGINE SHUT OFF

To shut off the engine in an emergency situation while driving, perform the following procedure:

- Rapidly push the push-button ignition switch three consecutive times in less than 1.5 seconds, or
- Push and hold the push-button ignition switch for more than 2 seconds.

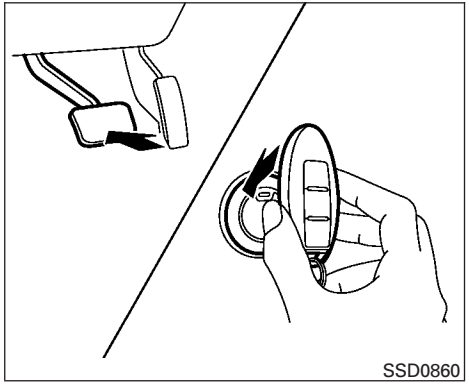

NISSAN INTELLIGENT KEY® BATTERY DISCHARGE

If the battery of the NISSAN Intelligent Key® is discharged, or environmental conditions interfere with the Intelligent Key operation, start the engine according to the following procedure:

1. Place the shift lever in the P (Park) position.
2. Firmly apply the foot brake.
3. Touch the ignition switch with the Intelligent Key as illustrated. (A chime will sound.)

   After Step 3 is performed, when the ignition switch is pushed without depressing the brake pedal, the ignition switch position will change to ACC.
4. Push the ignition switch while depressing the brake pedal within ten seconds after the chime sounds. The engine will start.

NOTE:

- **When the ignition switch is pushed to the ACC or ON position or the engine is started by the above procedure, the Intelligent Key battery discharge indicator appears in the vehicle information display even when the Intelligent Key is inside the vehicle. This is not a malfunction. To turn off the Intelligent Key battery discharge indicator, touch the ignition switch with the Intelligent Key again.**
- **If the Intelligent Key battery discharge indicator appears, replace the battery as soon as possible. For additional information, refer to “Battery replacement” in the “Do-it-yourself” section of this manual.**

NISSAN VEHICLE IMMOBILIZER SYSTEM

The NISSAN Vehicle Immobilizer System will not allow the engine to start without the use of the registered key.

If the engine fails to start using a registered key (for example, when interference is caused by another registered key, an automated toll road device or automatic payment device on the key ring), restart the engine using the following procedure:

1. Leave the ignition switch in the ON position for approximately 5 seconds.
2. Place the ignition switch in the OFF or LOCK position, and wait approximately 10 seconds.
3. Repeat steps 1 and 2.
4. Restart the engine while holding the device (which may have caused the interference) separate from the registered key.

If the no start condition re-occurs, NISSAN recommends placing the registered key on a separate key ring to avoid interference from other devices.

BEFORE STARTING THE ENGINE

- Make sure the area around the vehicle is clear.
- Check fluid levels such as engine oil, coolant, brake fluid, and windshield-washer fluid as frequently as possible, or at least whenever you refuel.
- Check that all windows and lights are clean.
- Visually inspect tires for their appearance and condition. Also check tires for proper inflation.
- Check that all doors are closed.
- Position seat and adjust head restraints/headrests.
- Adjust inside and outside mirrors.
- Fasten seat belts and ask all passengers to do likewise.
- Check the operation of warning lights when the ignition switch is placed in the ON position. For additional information, refer to "Warning lights, indicator lights and audible reminders" in the "Instruments and controls" section of this manual.

STARTING THE ENGINE

1. Apply the parking brake.
2. Move the shift lever to P (Park) or N (Neutral). P (Park) is recommended.

   The starter is designed not to operate if the shift lever is in any of the driving positions.
3. Push the ignition switch to the ON position. Depress the brake pedal and push the ignition switch to start the engine.

   To start the engine immediately, push and release the ignition switch while depressing the brake pedal with the ignition switch in any position.

   - If the engine is very hard to start in extremely cold weather or when restarting, depress the accelerator pedal a little (approximately 1/3 to the floor) and while holding, crank the engine. Release the accelerator pedal when the engine starts.
   - If the engine is very hard to start because it is flooded, depress the accelerator pedal all the way to the floor and hold it. Push the ignition switch to the ON position to start cranking the engine. After five or six seconds, stop cranking by pushing the ignition switch to LOCK. After cranking the engine, release the accelerator pedal. Crank the engine with your foot off the accelerator pedal by depressing the brake pedal and pushing the push-button ignition switch to start the engine. If the engine starts, but fails to run, repeat the above procedure.

⚠ CAUTION

Do not operate the starter for more than 15 seconds at a time. If the engine does not start, push the ignition switch to the OFF position and wait 10 seconds before cranking again, otherwise the starter could be damaged.

4. **Warm-up**

   Allow the engine to idle for at least 30 seconds after starting. Do not race the engine while warming it up. Drive at moderate speed for a short distance first, especially in cold weather. In cold weather, keep the engine running for a minimum of two to three minutes before shutting it off. Starting and stopping the engine over a short period of time may make the vehicle more difficult to start.
5. To stop the engine, shift the shift lever to the P (Park) position and push the ignition switch to the OFF position.

NOTE:

Care should be taken to avoid situations that can lead to potential battery discharge and potential no-start conditions such as:

1. **Installation or extended use of electronic accessories that consume battery power when the engine is not running (phone chargers, GPS, DVD players, etc.)**
2. **The vehicle is not driven regularly and/or only driven short distances.**

In these cases, the battery may need to be charged to maintain battery health.

REMOTE ENGINE START (if so equipped)

Vehicles started with the remote engine start require the ignition switch to be placed in the ON position before the shift lever can be moved from the P (Park) position. To place the ignition switch to the ON position, follow these steps:

1. Make sure that the Intelligent Key is on you.
2. Apply the brake.
3. Push the ignition switch once to the ON position.

For additional information, refer to “NISSAN Intelligent Key®” in the “Pre-driving checks and adjustments” section of this manual.

CONTINUOUSLY VARIABLE TRANSMISSION (CVT)

WARNING

- **Do not depress the accelerator pedal while shifting from P (Park) or N (Neutral) to R (Reverse), D (Drive). Always depress the brake pedal until shifting is completed. Failure to do so could cause you to lose control and have an accident.**
- **Cold engine idle speed is high, so use caution when shifting into a forward or reverse gear before the engine has warmed up.**
- **Do not downshift abruptly on slippery roads. This may cause a loss of control.**
- **Never shift to either the P (Park) or R (Reverse) position while the vehicle is moving forward and P (Park) or D (Drive) position while the vehicle is reversing. This could cause an accident or damage the transmission.**

CAUTION

- **To avoid possible damage to your vehicle, when stopping the vehicle on an uphill grade, do not hold the vehicle by depressing the accelerator pedal. The foot brake should be used for this purpose.**
- **Except in an emergency, do not shift to the N (Neutral) position while driving. Coasting with the transmission in the N (Neutral) position may cause serious damage to the transmission.**

The CVT in your vehicle is electronically controlled to produce maximum power and smooth operation.

The recommended operating procedures for this transmission are shown on the following pages. Follow these procedures for maximum vehicle performance and driving enjoyment.

Engine power may be automatically reduced to protect the CVT if the engine speed increases quickly when driving on slippery roads or while being tested on some dynamometers.

Starting the vehicle

1. After starting the engine, fully depress the foot brake pedal before moving the shift lever out of the P (Park) position.
   This CVT is designed so that the foot brake pedal must be depressed before shifting from P (Park) to any driving position while the ignition switch is in the ON position.
   The shift lever cannot be moved out of the P (Park) position and into any of the other positions if the ignition switch is placed in the LOCK, OFF or ACC position while the ready light illuminates.
2. Keep the foot brake pedal depressed and move the shift lever to a driving position.
3. Release the parking brake and foot brake pedal and then gradually start the vehicle in motion.

⚠ WARNING

- **Do not depress the accelerator pedal while shifting from P (Park) or N (Neutral) to R (Reverse) or D (Drive) position. Always depress the brake pedal until shifting is completed. Failure to do so could cause you to lose control and have an accident.**
- **Cold engine idle speed is high, so use caution when shifting into a forward or reverse gear before the engine has warmed up.**
- **Do not downshift abruptly on slippery roads. This may cause a loss of control.**
- **Never shift to either the P (Park) or R (Reverse) position while the vehicle is moving forward and P (Park) or D (Drive) position while the vehicle is reversing. This could cause an accident or damage the transmission.**

⚠ CAUTION

- **To avoid possible damage to your vehicle, when stopping the vehicle on an uphill grade, do not hold the vehicle by depressing the accelerator pedal. The foot brake should be used for this purpose.**
- **Except in an emergency, do not shift to the N (Neutral) position while driving. Coasting with the transmission in the N (Neutral) position may cause serious damage to the transmission.**

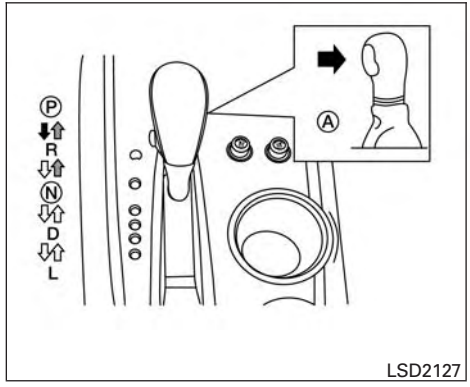

LSD2127

Shifting

➡	Press the button Ⓐ while depressing the brake pedal
⬅	Press the button Ⓐ to shift
⇨	Shift without pressing Ⓐ button

After starting the engine, fully depress the brake pedal, press the shift lever button and move the shift lever from the P (Park) position to any of the desired shift positions.

⚠ WARNING

Apply the parking brake if the shift lever is in any position while the engine is not running. Failure to do so could cause the vehicle to move unexpectedly or roll away and result in serious personal injury or property damage.

⚠ CAUTION

Use the P (Park) or R (Reverse) position only when the vehicle is completely stopped.

P (Park)

⚠ CAUTION

To prevent transmission damage, use the P (Park) position only when the vehicle is completely stopped

Use the P (Park) shift lever position when the vehicle is parked or when starting the engine. Make sure the vehicle is completely stopped. **The brake pedal must be depressed and the shift lever button pressed to move the shift lever from N (Neutral) or any drive position to P (Park).** Apply the parking brake. When parking on a hill, apply the parking brake first, then move the shift lever into the P (Park) position.

R (Reverse)

⚠ CAUTION

To prevent transmission damage, use the R (Reverse) position only when the vehicle is completely stopped.

Use the R (Reverse) position to back up. Make sure the vehicle is completely stopped before selecting the R (Reverse) position. **The brake pedal must be depressed and the shift lever button pressed to move the shift lever from P (Park), N (Neutral) or any drive position to R (Reverse).**

N (Neutral)

Neither forward nor reverse gear is engaged. The engine can be started in this position. You may shift to N (Neutral) and restart a stalled engine while the vehicle is moving.

D (Drive)

Use this position for all normal forward driving.

L (Low)

Use this position for engine braking on steep downhill gradients/climbing steep slopes and whenever approaching sharp bends. Do not use the L (Low) position in any other circumstances.

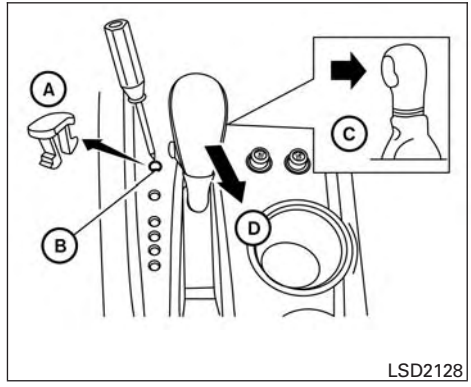

Shift lock release

If the battery charge is low or discharged, the shift lever may not be moved from the P (Park) position even with the brake pedal depressed and the shift lever button pressed. To move the shift lever, perform the following procedure:

1. Place the ignition switch in the OFF or LOCK position.
2. Apply the parking brake.
3. Remove the shift lock release cover Ⓐ using a suitable tool.
4. Push down the shift lock release Ⓑ using a suitable tool.

5. Press the shift lever button Ⓒ and move the shift lever to the N (Neutral) position Ⓓ while holding down the shift lock release. The vehicle may be moved to the desired location. Replace the removed shift lock release cover after the operation. If the shift lever cannot be moved out of the P (Park) position, have the CVT system checked as soon as possible. It is recommended that you visit a NISSAN dealer for this service.

⚠WARNING

If the shift lever cannot be moved from the P (Park) position while the engine is running and the brake pedal is depressed, the stop lights may not work. Malfunctioning stop lights could cause an accident injuring yourself and others.

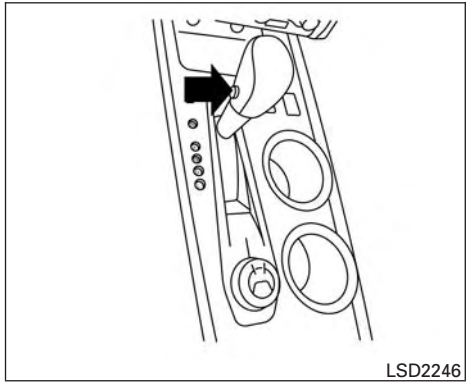

Overdrive (O/D) OFF switch

When the O/D OFF switch is pushed with the shift lever in the D (Drive) position, the O/D OFF light in the instrument panel illuminates. For additional information, refer to “Overdrive OFF indicator light” in the “Instruments and controls” section of this manual.

Use the overdrive OFF mode when you need improved engine braking.

To turn off the overdrive OFF mode, push the O/D OFF switch again. The O/D OFF indicator light will turn off.

Each time the engine is started, or when the shift lever is shifted to any position other than D (Drive), the overdrive OFF mode will be automatically turned off.

Accelerator downshift — in D (Drive) position —

For passing or hill climbing, depress the accelerator pedal to the floor. This shifts the transmission down into a lower gear, depending on the vehicle speed.

High fluid temperature protection mode

This transmission has a high fluid temperature protection mode. If the fluid temperature becomes too high (for example, when climbing steep grades in high temperatures with heavy loads, such as when towing a trailer), engine power and, under some conditions, vehicle speed will be decreased automatically to reduce the chance of transmission damage. Vehicle speed can be controlled with the accelerator pedal, but the engine and vehicle speed may be limited.

Fail-safe

If the vehicle is driven under extreme conditions, such as excessive wheel spinning and subsequent hard braking, the fail-safe

system may be activated. The Malfunction Indicator Light (MIL) may come on to indicate the fail-safe mode is activated. For additional information, refer to "Malfunction Indicator Light (MIL)" in the "Instruments and controls" section of this manual. This will occur even if all electrical circuits are functioning properly. In this case, place the ignition switch in the OFF position and wait for 10 seconds. Then push the switch back to the ON position. The vehicle should return to its normal operating condition. If it does not return to its normal operating condition, have the transmission checked and repaired, if necessary. It is recommended that you visit a NISSAN dealer for this service.

⚠ WARNING

When the high fluid temperature protection mode or fail-safe operation occurs, vehicle speed may be gradually reduced. The reduced speed may be lower than other traffic, which could increase the chance of a collision. Be especially careful when driving. If necessary, pull to the side of the road at a safe place and allow the transmission to return to normal operation, or have it repaired if necessary.

⚠ WARNING

- **Be sure the parking brake is fully released before driving. Failure to do so can cause brake failure and lead to an accident.**
- **Do not release the parking brake from outside the vehicle.**
- **Do not use the shift lever in place of the parking brake. When parking, be sure the parking brake is fully engaged.**
- **To help avoid risk of injury or death through unintended operation of the vehicle and/or its systems, do not leave children, people who require the assistance of others or pets unattended in your vehicle. Additionally, the temperature inside a closed vehicle on a warm day can quickly become high enough to cause a significant risk of injury or death to people and pets.**

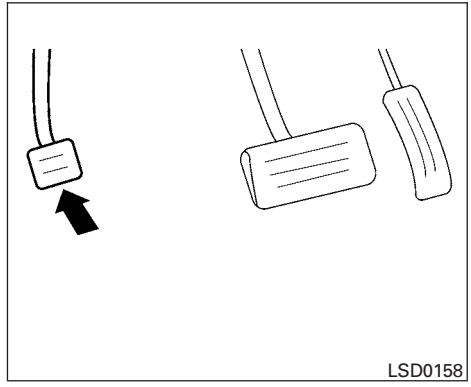

To engage: Firmly depress the parking brake.

To release:

1. Firmly apply the foot brake.
2. Move the shift lever to the P (Park) position.
3. Firmly depress the parking brake pedal and it will release.
4. Before driving, be sure the brake warning light goes out.

BLIND SPOT WARNING (BSW) (if so equipped)

⚠ WARNING

Failure to follow the warnings and instructions for proper use of the BSW system could result in serious injury or death.

- **The BSW system is not a replacement for proper driving procedures and is not designed to prevent contact with vehicles or objects. When changing lanes, always use the side and rear mirrors and turn and look in the direction your vehicle will move to ensure it is safe to change lanes. Never rely solely on the BSW system.**

The BSW system helps alert the driver of other vehicles in adjacent lanes when changing lanes.

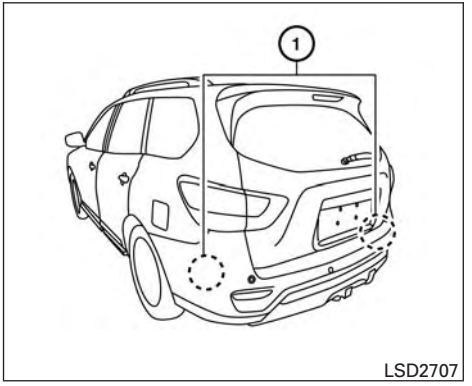

The BSW system uses radar sensors ① installed near the rear bumper to detect other vehicles in an adjacent lane.

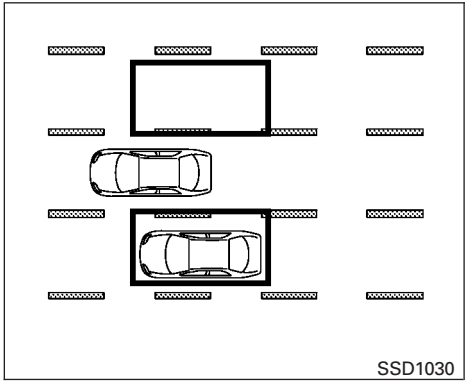

Detection zone

The radar sensors can detect vehicles on either side of your vehicle within the detection zone shown as illustrated. This detection zone starts from the outside mirror of your vehicle and extends approximately 10 ft (3.0 m) behind the rear bumper, and approximately 10 ft (3.0 m) sideways.

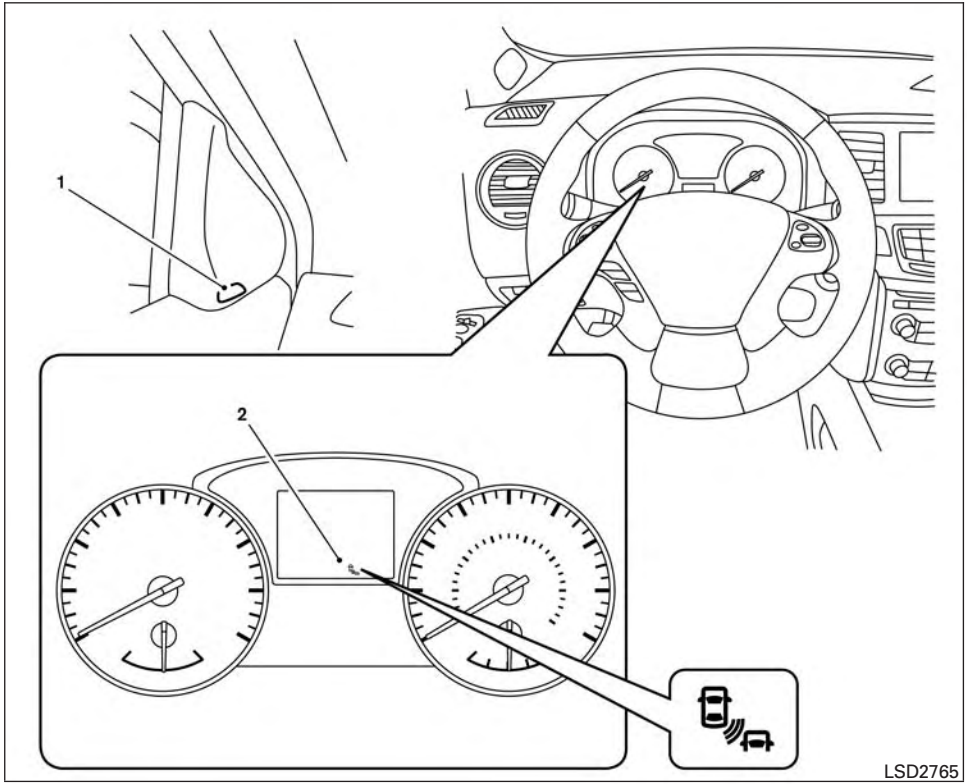

1. Side BSW/RCTA Indicator Light
2. BSW/RCTA Indicator

BSW SYSTEM OPERATION

The BSW system operates above approximately 20 mph (32km/h).

If the radar sensors detect a vehicle in the detection zone, the side BSW/RCTA indicator light (1) illuminates. If the turn signal is then activated, the system chimes (twice) and the side BSW/RCTA indicator light flashes. The side BSW/RCTA indicator light continues to flash until the detected vehicles leaves the detection zone.

The side BSW/RCTA indicator light illuminates for a few seconds when the ignition switch is placed in the ON position.

The brightness of the side BSW/RCTA indicator light is adjusted automatically depending on the brightness of the ambient light.

If a vehicle comes into the detection zone after the driver activates the turn signal, then only the side BSW/RCTA indicator light flashes and no chime sounds. For additional information, refer to “BSW driving situations” in this section.

The BSW system automatically turns on every time the engine is started, as long as it is activated using the settings menu on the vehicle information display.

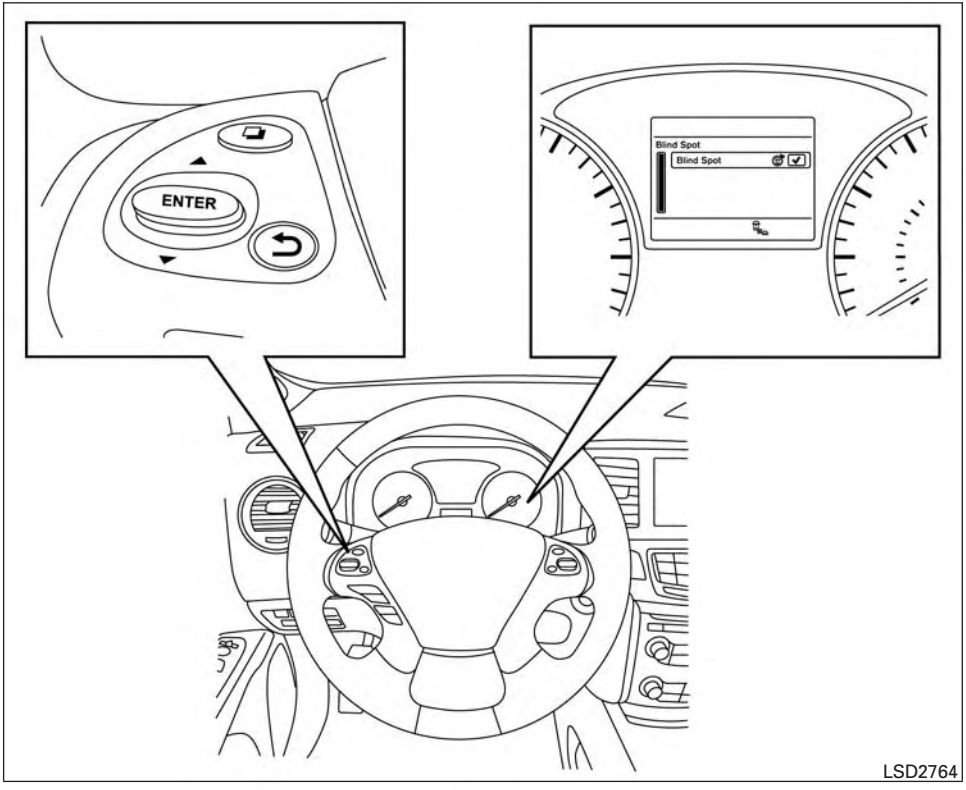

HOW TO ENABLE/DISABLE THE BSW SYSTEM

When the BSW system is enabled in the vehicle information display, the system can be turned off by pushing the warning systems switch. For additional information, refer to “Warning systems switch” in the “Instruments and controls” section of this manual.

Perform the following steps to enable or disable the BSW system.

1. Press the button until “Settings” displays in the vehicle information display and then press ENTER. Use the button to select “Driver Assistance.” Then press the ENTER button.
2. Select “Driving Aids” and press the ENTER button.
3. Select “Blind Spot” and press the ENTER button.
4. Use the ENTER button to turn the system on or off.

NOTE:

- **When enabling/disabling the system, the system will retain current settings even if the engine is restarted.**

- **The RCTA system (if so equipped) is integrated into the BSW system. There is not a separate selection in the vehicle information display for the RCTA system. When the BSW is disabled, the RCTA system is also disabled.**
- **When the BSW system is turned on, the BSW/RCTA indicator (white) in the vehicle information display illuminates.**

BSW SYSTEM LIMITATIONS

⚠ WARNING

Listed below are the system limitations for the BSW system. Failure to operate the vehicle in accordance with these system limitations could result in serious injury or death.

- **The BSW system cannot detect all vehicles under all conditions.**
- **The radar sensors may not be able to detect and activate BSW when certain objects are present such as:**
  - **Pedestrian, bicycles, animals.**
  - **Vehicles such as motorcycles, low height vehicles, or high ground clearance vehicles.**
  - **Oncoming vehicles.**
  - **Vehicles remaining in the detection zone when you accelerate from a stop.**
  - **A vehicle merging into an adjacent lane at a speed approximately the same as your vehicle.**
  - **A vehicle approaching rapidly from behind.**
  - **A vehicle which your vehicle overtakes rapidly.**
  - **A vehicle that passes through the detection zone quickly.**
  - **When overtaking several vehicles in a row, the vehicles after the first vehicle may not be detected if they are traveling close together.**
- **The radar sensors' detection zone is designed based on a standard lane width. When driving in a wider lane, the radar sensors may not detect vehicles in an adjacent lane. When driving in a narrow lane, the radar sensors may detect vehicles driving two lanes away.**
- **The radar sensors are designed to ignore most stationary objects, however objects such as guardrails, walls, foliage and parked vehicles may occasionally be detected. This is a normal operation condition.**
- **The following conditions may reduce the ability of the radar to detect other vehicles:**
  - **Severe weather**
  - **Road spray**
  - **Ice/frost/snow build-up on the vehicle**
  - **Dirt build-up on the vehicle**
- **Do not attach stickers (including transparent material), install accessories or apply additional paint near the radar sensors. These conditions may reduce the ability of the radar to detect other vehicles.**
- **Excessive noise (for example, audio system volume, open vehicle window) will interfere with the chime sound, and it may not be heard.**

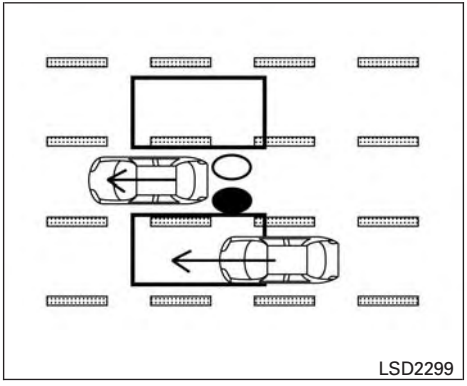

Illustration 1 – Approaching from behind

BSW DRIVING SITUATIONS

Indicator on

Indicator off

Indicator flashing

Another vehicle approaching from behind

Illustration 1: The side BSW/RCTA indicator light illuminates if a vehicle enters the detection zone from behind in an adjacent lane.

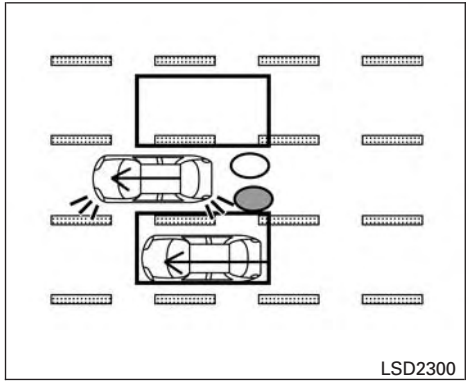

Illustration 2 – Approaching from behind

Illustration 2: If the driver activates the turn signal when another vehicle is in the detection zone, then the system chimes (twice) and the side indicator light flashes.

NOTE:

- **The radar sensors may not detect vehicles which are approaching rapidly from behind.**
- **If the driver activates the turn signal before a vehicle enters the detection zone, the side indicator light will flash but no chime will sound when the other vehicle is detected.**

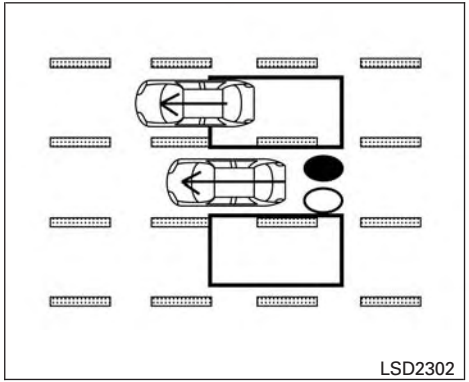

Illustration 3 – Overtaking another vehicle

Overtaking another vehicle

Illustration 3: The side indicator light illuminates if you overtake a vehicle and that vehicle stays in the detection zone for approximately 2 seconds.

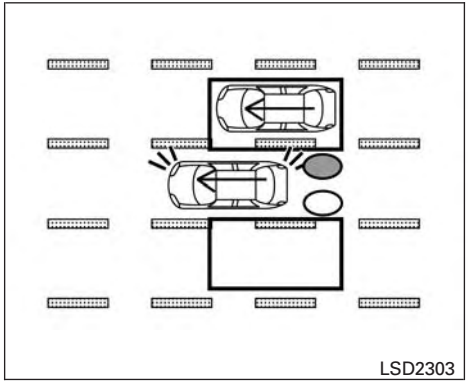

Illustration 4 – Overtaking another vehicle

Illustration 4: If the driver activates the turn signal while another vehicle is in the detection zone, then the system chimes (twice) and the side indicator light flashes.

NOTE:

- **When overtaking several vehicles in a row, the vehicles after the first vehicle may not be detected if they are traveling close together.**
- **The radar sensors may not detect slower moving vehicles if they are passed quickly.**
- **If the driver activates the turn signal before a vehicle enters the detection zone, the side indicator light will flash but no chime will sound when the other vehicle is detected.**

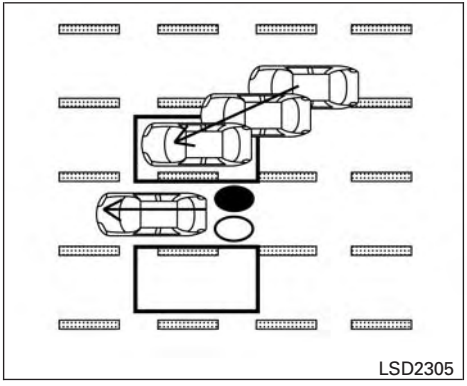

Illustration 5 – Entering from the side

Entering from the side

Illustration 5: The side indicator light illuminates if a vehicle enters the detection zone from either side.

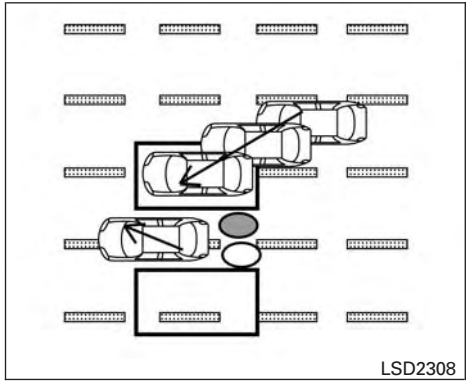

Illustration 6 – Entering from the side

Illustration 6: If the driver activates the turn signal while another vehicle is in the detection zone, then the system chimes (twice) and the side indicator light flashes.

NOTE:

- **If the driver activates the turn signal before a vehicle enters the detection zone, the side indicator light will flash but no chime will sound when the other vehicle is detected.**
- **The radar sensors may not detect a vehicle which is traveling at about the same speed as your vehicle when it enters the detection zone.**

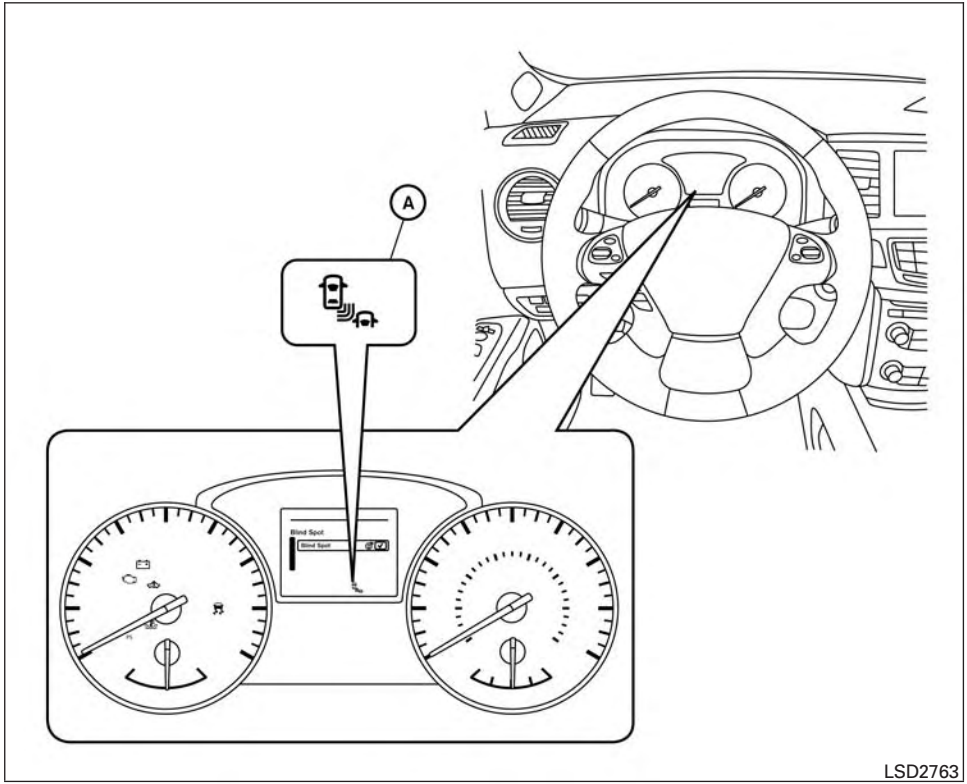

SYSTEM TEMPORARILY UNAVAILABLE

When radar blockage is detected, the system will be deactivated automatically. The “Side Radar Obstruction” warning message will appear and the BSW/RCTA indicator (white) will blink Ⓐ in the vehicle information display.

The system is not available until the conditions no longer exist.

The radar sensors may be blocked by temporary ambient conditions such as splashing water, mist or fog. The blocked condition may also be caused by objects such as ice, frost or dirt obstructing the radar sensors.

NOTE:

If the BSW system stops working, the RCTA system (if so equipped) will also stop working.

Action to take:

When the above conditions no longer exist, the system will resume automatically.

Malfunction

If the BSW system malfunctions, it will turn off automatically. The system malfunction warning message with the BSW/RCTA indicator (orange) will appear in the vehicle information display.

NOTE:

If the BSW system stops working, the RCTA system (if so equipped) will also stop working.

Action to take:

Stop the vehicle in a safe location, place the vehicle in the P (Park) position, turn the engine off and restart the engine. If the message continues to appear, have the system checked. It is recommended that you visit a NISSAN dealer for this service.

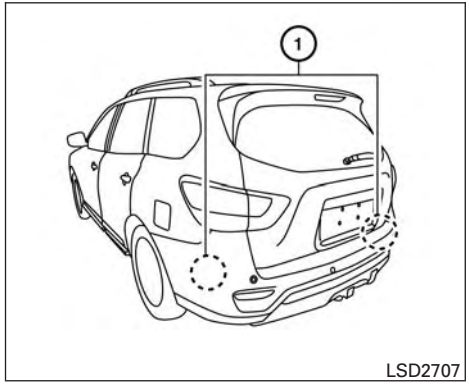

SYSTEM MAINTENANCE

The two radar sensors ① for the BSW and RCTA systems are located near the rear bumper. Always keep the area near the radar sensors clean.

The radar sensors may be blocked by temporary ambient conditions such as splashing water, mist or fog.

The blocked condition may also be caused by objects such as ice, frost or dirt obstructing the radar sensors.

Check for and remove objects obstructing the area around the radar sensors.

Do not attach stickers (including transparent material), install accessories or apply additional paint near the radar sensors.

Do not strike or damage the area around the radar sensors. It is recommended that you consult a NISSAN dealer if the area around the radar sensors is damaged due to a collision.

Radio frequency statement

For USA

FCC ID: OAYSRR2B or OAYSRR3B

This device complies with part 15 of the FCC Rules.

Operation is subject to the following two conditions:

1. This device may not cause harmful interference, and
2. This device must accept any interference received, including interference that may cause undesired operation.

FCC Warning

Changes or modifications not expressly approved by the party responsible for compliance could void the user's authority to operate the equipment.

For Canada

Applicable law: Canada 310

This device complies with Industry Canada license-exempt RSS standard(s). Operation is subject to the following two conditions:

1. This device may not cause interference, and
2. This device must accept any interference, including interference that may cause undesired operation of the device.

Frequency bands: 24.05 – 24.25GHz

Output power: less than 20 milliwatts

Droit applicable: Canada 310

Le présent appareil est conforme aux CNR d'Industrie Canada applicables aux appareils radio exempts de licence. L'exploitation est autorisée aux deux conditions suivantes:

1. L'appareil ne doit pas produire de brouillage, et
2. L'utilisateur de l'appareil doit accepter tout brouillage radioélectrique subi, même si le brouillage est susceptible d'en compromettre le fonctionnement.

Bandes de fréquences: 24.05 - 24.25GHz

Puissance émise: Moins de 20 milliwatts

REAR CROSS TRAFFIC ALERT (RCTA) (if so equipped)

⚠ WARNING

Failure to follow the warnings and instructions for proper use of the RCTA system could result in serious injury or death.

- **The RCTA system is not a replacement for proper driving procedures and is not designed to prevent contact with vehicles or objects. When backing out of a parking space, always use the side and rear mirrors and turn and look in the direction your vehicle will move. Never rely solely on the RCTA system.**

The RCTA system will assist you when backing out from a parking space. When the vehicle is in reverse, the system is designed to detect other vehicles approaching from the right or left of the vehicle. If the system detects cross traffic, it will alert you.

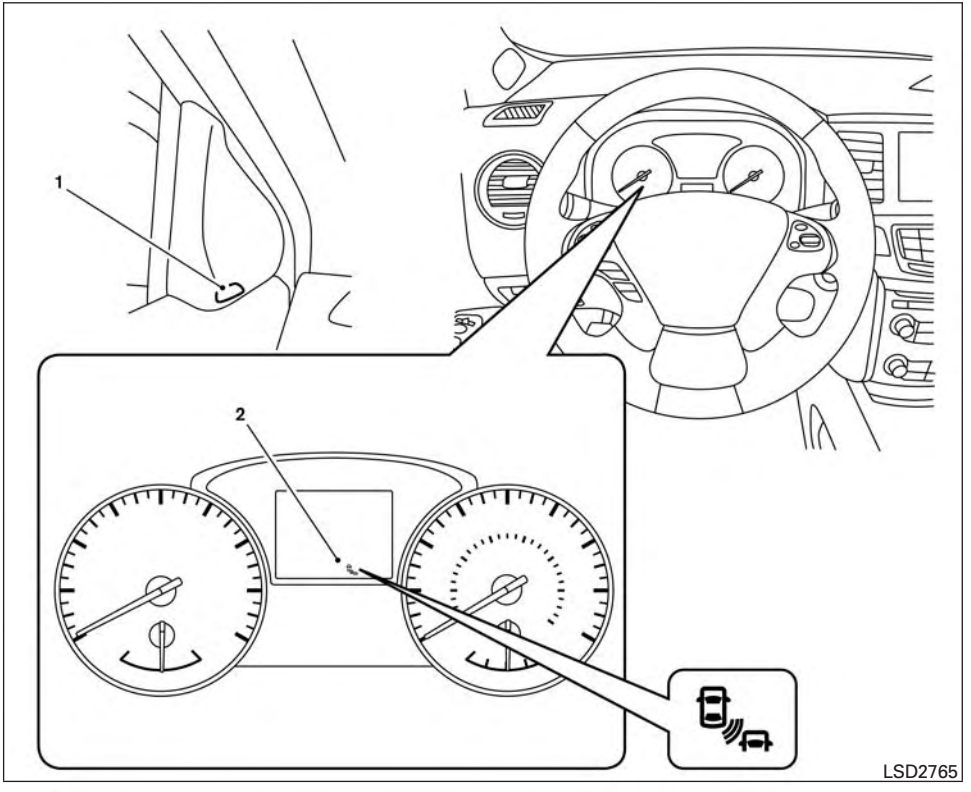

1. Side BSW/RCTA Indicator Light
2. BSW/RCTA Indicator

RCTA SYSTEM OPERATION

The RCTA system can help alert the driver of an approaching vehicle when the driver is backing out of a parking space.

When the shift position is in R (Reverse) and the vehicle speed is less than approximately 5 mph (8 km/h), the RCTA system is operational.

If the radar detects an approaching vehicle from either side, the system chimes (once) and the side BSW/RCTA indicator light flashes on the side the vehicle is approaching from.

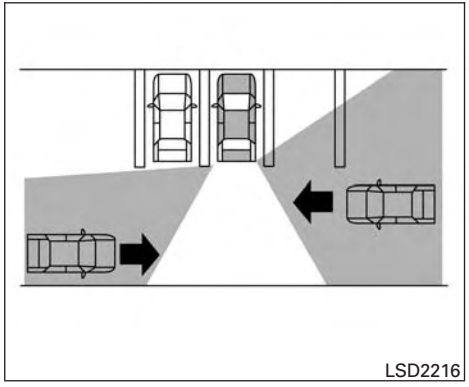

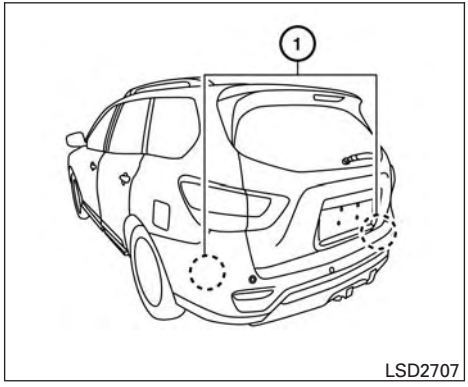

The RCTA system uses radar sensors ① installed on both sides near the rear bumper to detect an approaching vehicle.

The radar sensors ① can detect an approaching vehicle from up to approximately 66 ft. (20 m) away.

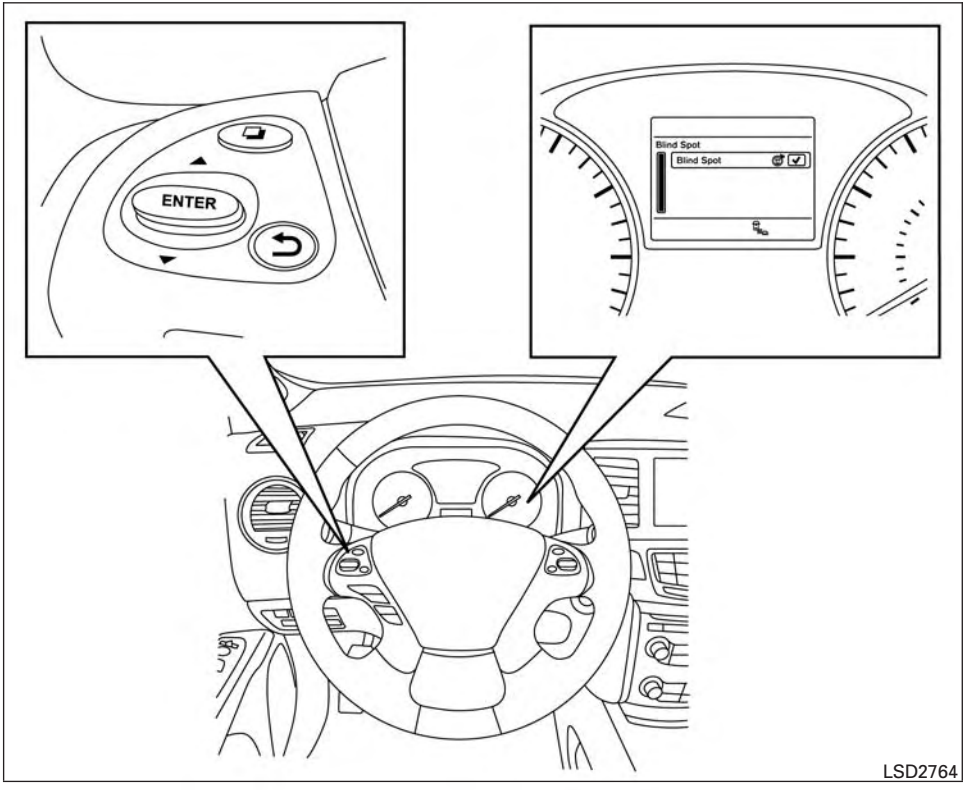

HOW TO ENABLE/DISABLE THE RCTA SYSTEM

When the RCTA system is enabled in the vehicle information display, the system can be turned off by pushing the warning systems switch. For additional information, refer to “Warning systems switch” in the “Instruments and controls” section of this manual.

Perform the following steps to enable or disable the RCTA system.

1. Press the button until “Settings” displays in the vehicle information display and then press ENTER. Use the button to select “Driver Assistance.” Then press the ENTER button.
2. Select “Driving Aids” and press the ENTER button.
3. Select “Blind Spot” and press the ENTER button.
4. Use the ENTER button to turn the system on or off.

When the RCTA system is turned on, the BSW/RCTA indicator (white) in the vehicle information display illuminates.

NOTE:

- **The RCTA system is integrated into the BSW system. There is not a separate selection in the vehicle information display for the RCTA system. When the BSW is disabled, the RCTA system is also disabled.**
- **When enabling/disabling the system, the system setting will be retained even if the engine is restarted.**

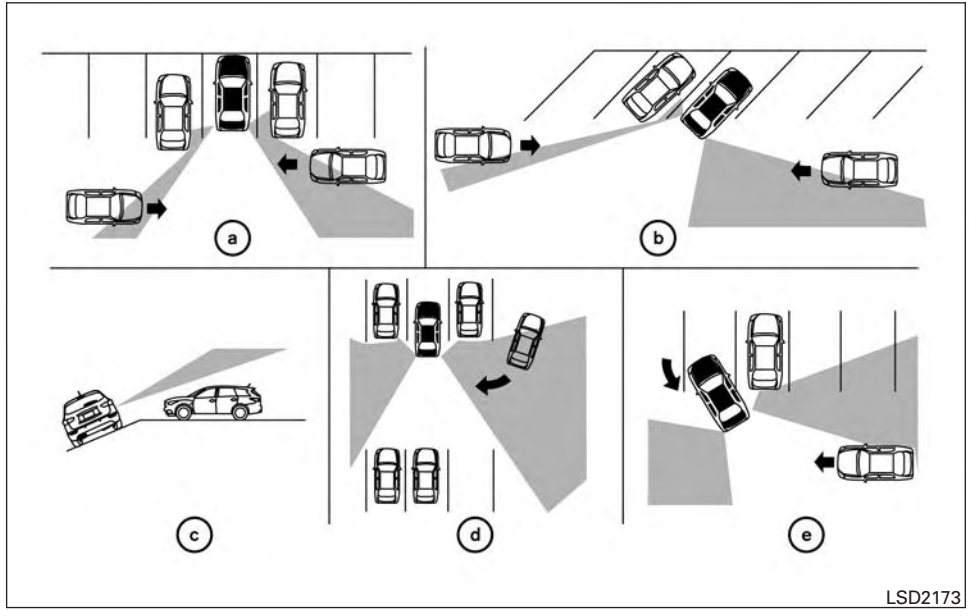

RCTA SYSTEM LIMITATIONS

⚠ WARNING

Listed below are the system limitations for the RCTA system. Failure to operate the vehicle in accordance with these system limitations could result in serious injury or death.

- **Always check surroundings and turn to check what is behind you before backing up. The radar sensors detect approaching (moving) vehicles. The radar sensors cannot detect every object such as:**
  - **Pedestrians, bicycles, motorcycles, animals or child-operated toy vehicles**
  - **A vehicle that is passing at speeds greater than approximately 19 mph (30 km/h)**
  - **A vehicle that is passing at speeds lower than approximately 5 mph (8 km/h)**
- **The radar sensors may not detect approaching vehicles in certain situations:**
  - **Illustration a: When a vehicle parked next to you obstructs the beam of the radar sensor.**
  - **Illustration b: When the vehicle is parked in an angled parking space.**
  - **Illustration c: When the vehicle is parked on inclined ground.**
  - **Illustration d: When an approaching vehicle turns into your vehicle's parking lot aisle.**
  - **Illustration e: When the angle formed by your vehicle and approaching vehicle is small**
- **The following conditions may reduce the ability of the radar to detect other vehicles:**
  - **Severe weather**
  - **Road spray**
  - **Ice/frost/snow build-up on the vehicle**
  - **Dirt build- up on the vehicle**
- **Do not attach stickers (including transparent material), install accessories or apply additional paint near the radar sensors. These conditions may reduce the ability of the radar to detect other vehicles**
- **Excessive noise (e.g. audio system volume, open vehicle window) will interfere with the chime sound, and it may not be heard.**

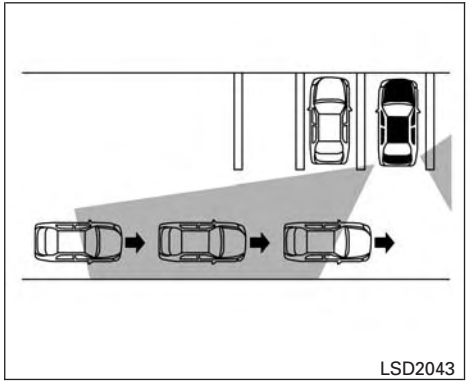

Illustration 1

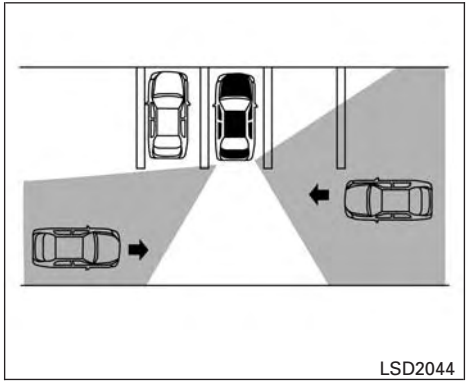

Illustration 2

NOTE:

In the case of several vehicles approaching in a row (Illustration 1) or in the opposite direction (Illustration 2), a chime may not be sounded by the RCTA system after the first vehicle passes the sensors.

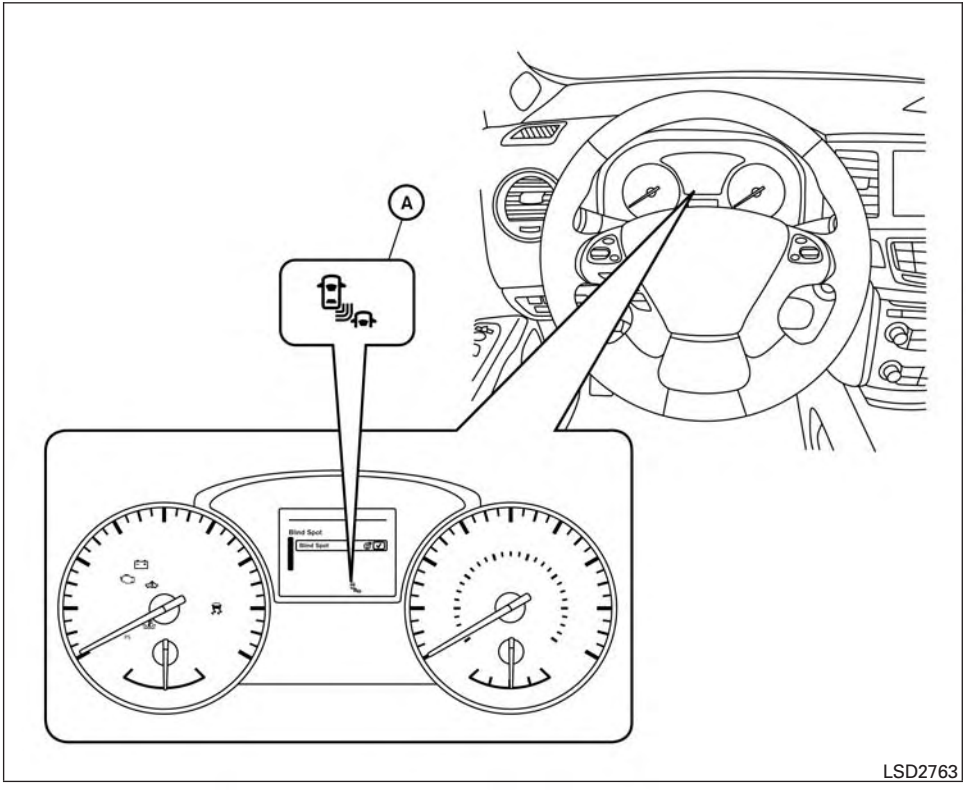

SYSTEM TEMPORARILY UNAVAILABLE

When radar blockage is detected, the system will be deactivated automatically. The “Side Radar Obstruction” warning message will appear and the BSW/RCTA indicator (white) will blink Ⓐ in the vehicle information display.

The systems are not available until the conditions no longer exist.

The radar sensors may be blocked by temporary ambient conditions such as splashing water, mist or fog.

The blocked condition may also be caused by objects such as ice, frost or dirt obstructing the radar sensors.

NOTE:

If the BSW system stops working, the RCTA system will also stop working.

Action to take

When the above conditions no longer exist, the system will resume automatically.

Malfunction

When the RCTA system malfunctions, it will turn off automatically. The system malfunction warning message with the BSW/RCTA indicator (orange) will appear in the vehicle information display.

NOTE:

If the BSW system stops working, the RCTA system (if so equipped) will also stop working.

Action to take

Stop the vehicle in a safe location, place the vehicle in the P (Park) position, turn the engine off and restart the engine. If the message continues to appear, have the system checked. It is recommended that you visit a NISSAN dealer for this service.

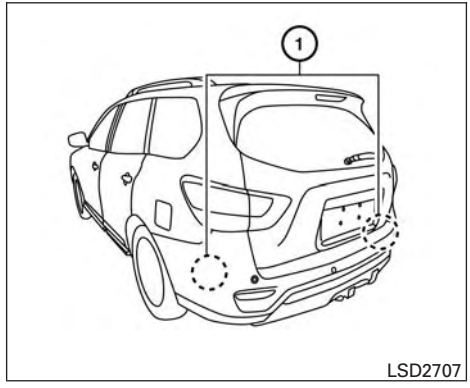

SYSTEM MAINTENANCE

The two radar sensors ① for the BSW and RCTA systems are located near the rear bumper. Always keep the area near the radar sensors clean.

The radar sensors may be blocked by temporary ambient conditions such as splashing water, mist or fog.

The blocked condition may also be caused by objects such as ice, frost or dirt obstructing the radar sensors.

Check for and remove objects obstructing the area around the radar sensors.

Do not attach stickers (including transparent material), install accessories or apply additional paint near the radar sensors.

Do not strike or damage the area around the radar sensors. It is recommended that you consult a NISSAN dealer if the area around the radar sensors is damaged due to a collision.

Radio frequency statement

For USA

FCC ID: OAYSRR2B or OAYSRR3B

This device complies with part 15 of the FCC Rules.

Operation is subject to the following two conditions:

1. This device may not cause harmful interference, and
2. This device must accept any interference received, including interference that may cause undesired operation.

FCC Warning

Changes or modifications not expressly approved by the party responsible for compliance could void the user's authority to operate the equipment.

For Canada

Applicable law: Canada 310

This device complies with Industry Canada license-exempt RSS standard(s). Operation is subject to the following two conditions:

1. This device may not cause interference, and
2. This device must accept any interference, including interference that may cause undesired operation of the device.

Frequency bands: 24.05 – 24.25GHz

Output power: less than 20 milliwatts

Droit applicable: Canada 310

Le présent appareil est conforme aux CNR d'Industrie Canada applicables aux appareils radio exempts de licence. L'exploitation est autorisée aux deux conditions suivantes:

1. L'appareil ne doit pas produire de brouillage, et
2. L'utilisateur de l'appareil doit accepter tout brouillage radioélectrique subi, même si le brouillage est susceptible d'en compromettre le fonctionnement.

Bandes de fréquences: 24.05 - 24.25GHz

Puissance émise: Moins de 20 milliwatts

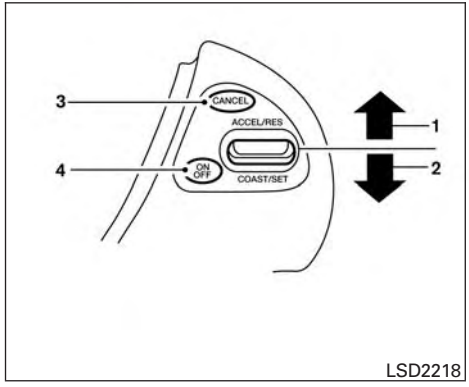

PRECAUTIONS ON CRUISE CONTROL

1. ACCEL/RES switch
2. COAST/SET switch
3. CANCEL switch
4. ON/OFF switch

- If the cruise control system malfunctions, it cancels automatically. The indicator illuminates in the vehicle information display then blinks to warn the driver. For additional information, refer to "Vehicle information display" in the "Instruments and controls" section of this manual.
- If the indicator blinks, push the cruise control ON/OFF switch off and have the system checked. It is recommended that you visit a NISSAN dealer for this service.
- The indicator may blink when the cruise control ON/OFF switch is pushed ON while pushing the ACCEL/RES, COAST/SET, or CANCEL switch. To properly set the cruise control system, use the following procedures.

WARNING

Do not use the cruise control when driving under the following conditions:

- **When it is not possible to keep the vehicle at a set speed.**
- **In heavy traffic or in traffic that varies in speed.**
- **On winding or hilly roads.**
- **On slippery roads (rain, snow, ice, etc.).**
- **In very windy areas.**

Doing so could cause a loss of vehicle control and result in an accident.

CRUISE CONTROL OPERATIONS

The cruise control allows driving at a speed between 25 - 89 mph (40 - 144 km/h) without keeping your foot on the accelerator pedal.

To turn on the cruise control, push the ON/OFF switch on. The indicator (white) in the vehicle information display will illuminate.

To set cruising speed, accelerate the vehicle to the desired speed, push the COAST/SET switch and release it. The indicator (green) in the vehicle information display will illuminate. Take your foot off the accelerator pedal. Your vehicle maintains the set speed.

- **To pass another vehicle,** depress the accelerator pedal. When you release the pedal, the vehicle returns to the previously set speed.
- The vehicle may not maintain the set speed when going up or down steep hills. If this happens, drive without the cruise control.

To cancel the preset speed, use one of the following three methods:

- Push the CANCEL switch; the indicator (green) in the vehicle information display goes out.
- Tap the brake pedal; the indicator (green) goes out.
- Push the ON/OFF switch off. The indicator in the vehicle information display go out.

The cruise control is automatically canceled and the indicator (green) in the vehicle information display goes out if:

- You depress the brake pedal while pushing the ACCEL/RES or SET/COAST switch. The preset speed is deleted from memory.
- The vehicle slows down more than 8 mph (13 km/h) below the set speed.
- You move the shift lever to N (Neutral).

To reset at a faster cruising speed, use one of the following three methods:

- Depress the accelerator pedal. When the vehicle attains the desired speed, push and release the COAST/SET switch.
- Push and hold the ACCEL/RES switch. When the vehicle attains the speed you desire, release the switch.
- Push and release the ACCEL/RES switch. Each time you do this, the set speed increases by about 1 mph (1.6 km/h).

To reset at a slower cruising speed, use one of the following three methods:

- Lightly tap the brake pedal. When the vehicle attains the desired speed, push the COAST/SET switch and release it.
- Push and hold the COAST/SET switch. Release the switch when the vehicle slows to the desired speed.
- Push and release the COAST/SET switch. Each time you do this, the set speed decreases by about 1 mph (1.6 km/h).

To resume the preset speed, push and release the ACCEL/RES switch. The vehicle returns to the last set cruising speed when the vehicle speed is over 25 mph (40 km/h).

⚠ WARNING

Failure to follow the warnings and instructions for proper use of the ICC system could result in serious injury or death.

- **The ICC system is only an aid to assist the driver and is not a collision warning or avoidance device. It is the driver's responsibility to stay alert, drive safely, and be in control of the vehicle at all times.**
- **Always observe posted speed limits and do not set the speed over them.**
- **Always drive carefully and attentively when using the ICC system. Read and understand the Owner's Manual thoroughly before using the ICC system. To avoid serious injury or death, do not rely on the system to prevent accidents or to control the vehicle's speed in emergency situations. Do not use the ICC system except in appropriate road and traffic conditions.**

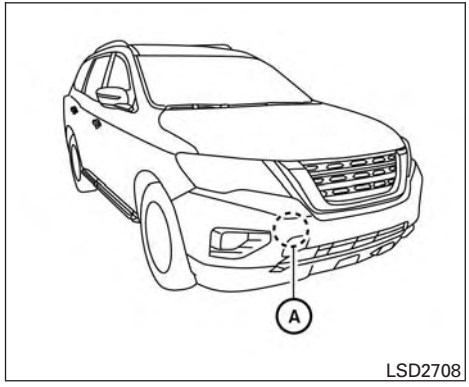

LSD2708

The ICC system is intended to enhance the operation of the vehicle when following a vehicle traveling in the same lane and direction.

The ICC system uses a radar sensor Ⓐ located on the front of the vehicle to detect vehicles traveling ahead.

If the radar sensor detects a slower moving vehicle ahead, the system will reduce the vehicle speed so that your vehicle follows the vehicle in front at the selected distance.

The detection range of the sensor is approximately 390 ft (120 m) ahead.

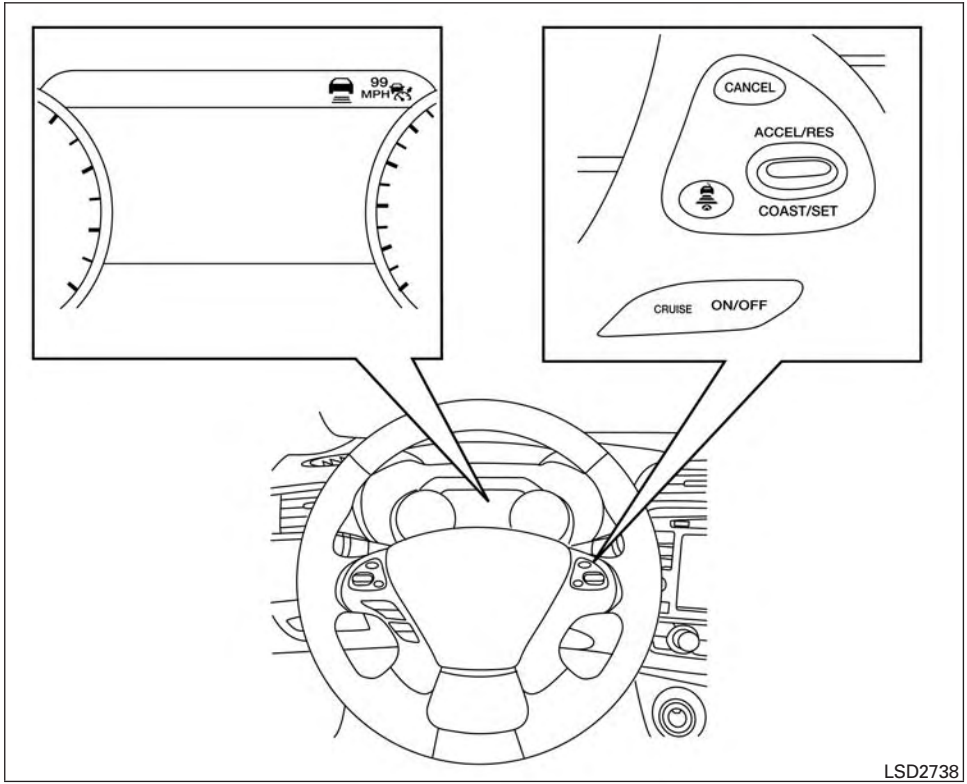

ICC SYSTEM OPERATION

The ICC system maintains a selected distance from the vehicle in front of you within the speed range 0 to 90 mph (0 to 144 km/h) up to the set speed. The set speed can be selected by the driver between 20 to 90 mph (32 to 144 km/h), based on road conditions.

The vehicle travels at the set speed when the road ahead is clear.

The ICC system is designed to maintain a selected distance from the vehicle in front of you and can reduce the speed to match a slower vehicle ahead. The system will decelerate the vehicle as necessary and if the vehicle ahead comes to a stop, the vehicle decelerates to a standstill. However, the ICC system can only apply up to 40% of the vehicle's total braking power.

This system should only be used when traffic conditions allow vehicle speeds to remain fairly constant or when vehicle speeds change gradually. If a vehicle moves into the traveling lane ahead or if a vehicle traveling ahead rapidly decelerates, the distance between vehicles may become closer because the ICC system cannot decelerate the vehicle quickly enough. If this occurs, the ICC system will sound a warning chime and blink the system display to notify the driver to take necessary action.

For additional information, refer to “Approach warning” in this section.

The following items are controlled in the ICC system:

- When there are no vehicles traveling ahead, the ICC system maintains the speed set by the driver. The set speed range is between approximately 20 and 90 mph (32 and 144 km/h).
- When there is a vehicle traveling ahead, the ICC system adjusts the speed to maintain the distance, selected by the driver, from the vehicle ahead. If the vehicle ahead comes to a stop, the vehicle decelerates to a standstill within the limitations of the system. The system will cancel once it judges a standstill with a warning chime.
- When the vehicle traveling ahead has moved out from its lane of travel, the ICC system accelerates and maintains vehicle speed up to the set speed.

The ICC system does not control vehicle speed or warn you when you approach stationary and slow moving vehicles. You must pay attention to vehicle operation to maintain proper distance from vehicles ahead when approaching toll gates or traffic congestion.

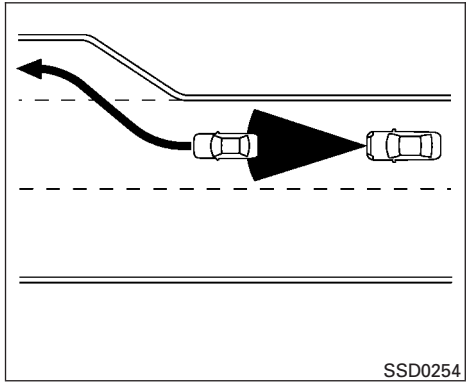

When driving on the freeway at a set speed and approaching a slower traveling vehicle ahead, the ICC system will adjust the speed to maintain the distance, selected by the driver, from the vehicle ahead. If the vehicle ahead changes lanes or exits the freeway, the ICC system will accelerate and maintain the speed up to the set speed. Pay attention to the driving operation to maintain control of the vehicle as it accelerates to the set speed.

Normally when controlling the distance to a vehicle ahead, this system automatically accelerates or decelerates your vehicle according to the speed of the vehicle ahead. Depress the accelerator to properly accelerate your vehicle when acceleration is required for a lane change. Depress the brake pedal when deceleration is required to maintain a safe distance to the vehicle ahead due to its sudden braking or if a vehicle cuts in. Always stay alert when using the ICC system.

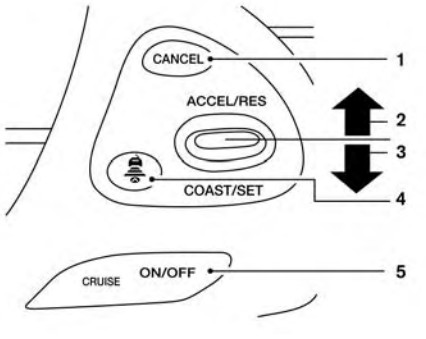

LSD2739

THE ICC SWITCH

The system is operated by the CRUISE ON/OFF switch and four control switches, all mounted on the steering wheel.

1. **CANCEL switch:**

   Deactivates the system without erasing the set speed.

2. **ACCEL/RES switch:**

   Resumes set speed or increases speed incrementally.

3. **COAST/SET switch:**

   Sets desired cruise speed or reduces speed incrementally.

4. **DISTANCE switch:**

   Changes the vehicle's following distance:

   - Long
   - Middle
   - Short

5. **CRUISE ON/OFF switch:**

   Master switch to activate the system.

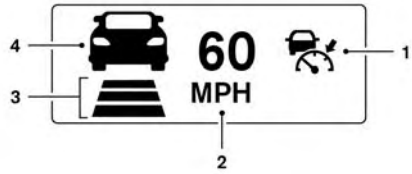

LSD2285

The ICC system display and indicators

The display is located between the speedometer and tachometer.

1. CRUISE ON/OFF switch indicator:

   - **ICC system ON indicator (white):** Indicates that the CRUISE ON/OFF switch is ON.
   - **ICC system SET indicator (green):** Indicates that the cruising speed is set.
   - **ICC system warning (orange):** Indicates that if there is a malfunction in the ICC system.

2. Set vehicle speed indicator:

   Indicates the set vehicle speed.

   For Canadian models, the speed is displayed in km/h.

3. Set distance indicator:

   Displays the selected distance between vehicles set with the distance switch.

4. Vehicle ahead detection indicator:

   Indicates whether it detects a vehicle in front of you.

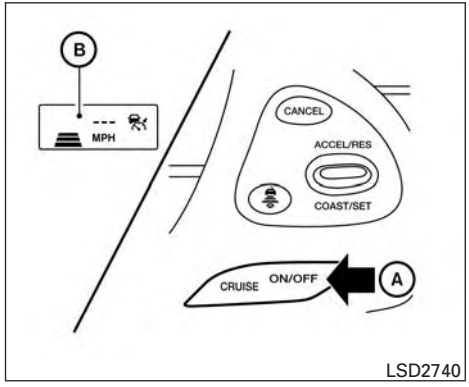

LSD2740

Operating ICC

To turn on the cruise control: quickly push and release the CRUISE ON/OFF switch Ⓐ. The ICC system ON indicator (white), set distance indicator and set vehicle speed indicator come on in a standby state for setting.

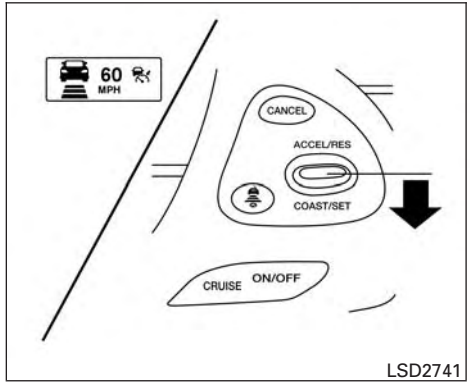

LSD2741

To set cruising speed: accelerate your vehicle to the desired speed, push the COAST/SET switch and release it. The ICC system set indicator (green), vehicle ahead detection indicator, set distance indicator and set vehicle speed indicator Ⓑ will come on. Take your foot off the accelerator pedal. Your vehicle will maintain the set speed.

When the COAST/SET switch is pushed under the following conditions, the system cannot be set and the ICC indicators will blink for approximately 2 seconds:

- When traveling below 20 mph (32 km/h) and a vehicle ahead is not detected

- When the shift lever is not in the D (Drive) or Manual mode
- When the parking brake is applied
- When the brakes are operated by the driver

When the COAST/SET switch is pushed under the following conditions, the system cannot be set.

A warning chime will sound and a message will pop up:

- When the VDC system is off (To use the ICC system, turn on the VDC system. Push the CRUISE ON/OFF switch to turn off the ICC system and reset the ICC switch by pushing the CRUISE ON/OFF switch again.)

  For additional information about the VDC system, refer to “Vehicle Dynamic Control (VDC) system” in this section.
- When ABS or VDC is operating
- When a wheel is slipping (To use the ICC system, make sure the wheels are no longer slipping. Push the CRUISE ON/OFF switch to turn off the ICC system, and reset the ICC system by pushing the CRUISE ON/OFF switch again.)

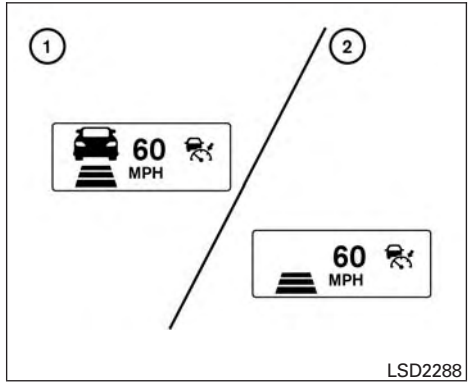

① System set display with vehicle ahead

② System set display without vehicle ahead

Vehicle detected ahead

When a vehicle is detected in the lane ahead, the ICC system decelerates the vehicle by controlling the throttle and applying the brakes to match the speed of a slower vehicle ahead. The system then controls the vehicle speed based on the speed of the vehicle ahead to maintain the driver selected distance.

NOTE:

- **The stoplights of the vehicle come on when braking is performed by the ICC system.**
- **When the brake operates, a noise may be heard. This is not a malfunction.**

When a vehicle ahead is detected, the vehicle ahead detection indicator comes on. The ICC system will also display the set speed and selected distance.

Vehicle ahead not detected

When a vehicle is no longer detected ahead, the ICC system gradually accelerates your vehicle to resume the previously set vehicle speed. The ICC system then maintains the set speed.

When a vehicle is no longer detected, the vehicle ahead detection indicator turns off.

If a vehicle ahead appears during acceleration to the set vehicle speed or any time the ICC system is in operation, the system controls the distance to that vehicle.

When a vehicle is no longer detected under approximately 15 mph (24 km/h), the system will be canceled.

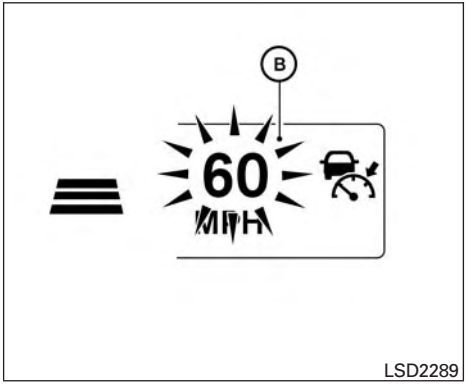

When passing another vehicle, the set speed indicator Ⓑ will flash when the vehicle speed exceeds the set speed. The vehicle detect indicator will turn off when the area ahead of the vehicle is open. When the pedal is released, the vehicle will return to the previously set speed.

Even though your vehicle speed is set in the ICC system, you can depress the accelerator pedal when it is necessary to accelerate your vehicle rapidly.

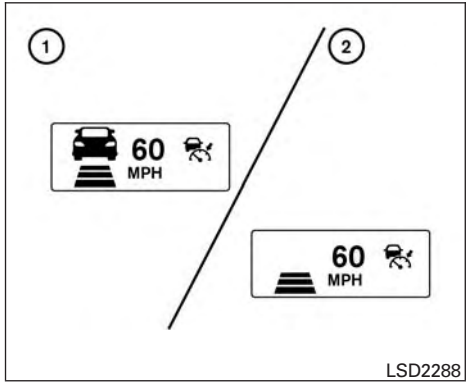

① System set display with vehicle ahead

② System set display without vehicle ahead

How to change the set vehicle speed

To cancel the preset speed: use one of the following methods:

- Push the CANCEL switch. The set vehicle speed indicator will go out.
- Tap the brake pedal. The set vehicle speed indicator will go out.
- Turn the CRUISE ON/OFF switch off. The ICC indicators will go out.

To reset at a faster cruising speed: use one of the following methods:

- Depress the accelerator pedal. When the vehicle attains the desired speed, push and release the COAST/SET switch.
- Push and hold the ACCEL/RES switch. The set vehicle speed will increase by approximately 5 mph (5 km/h).
- Push, then quickly release the ACCEL/RES switch. Each time you do this, the set speed will increase by approximately 1 mph (1 km/h).

To reset at a slower cruising speed: use one of the following methods:

- Lightly tap the brake pedal. When the vehicle attains the desired speed, push the COAST/SET switch and release it.
- Push and hold the COAST/SET switch. The set vehicle speed will decrease by approximately 5 mph (5 km/h).
- Push, then quickly release the COAST/SET switch. Each time you do this, the set speed will decrease by approximately 1 mph (1 km/h).

To resume the preset speed: push and release the ACCEL/RES switch. The vehicle will resume the last set cruising speed when the vehicle speed is over 20 mph (32 km/h).

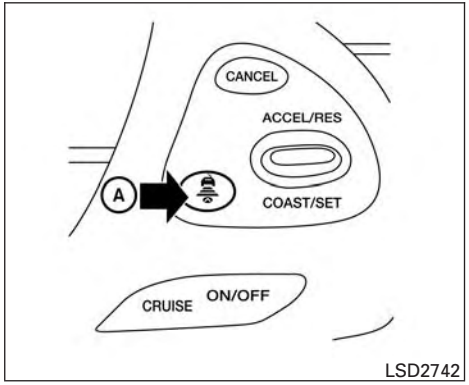

How to change the set distance to the vehicle ahead

The distance to the vehicle ahead can be selected at any time depending on the traffic conditions.

Each time the distance switch Ⓐ is pushed, the set distance will change to long, middle, short and back to long again, in that sequence.

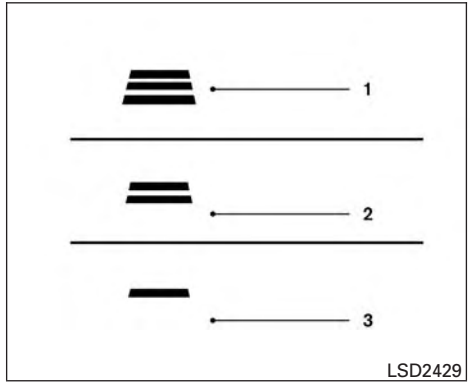

	Distance	Approximate distance at 60 mph (100 km/h) [ft (m)]
1.	Long	200 (60)
2.	Middle	150 (45)
3.	Short	90 (30)

- The distance to the vehicle ahead will change according to the vehicle speed. The higher the vehicle speed, the longer the distance.
- If the engine is stopped, the set distance becomes “long.” (Each time the engine is started, the initial setting becomes “long.”)

Approach warning

If your vehicle comes closer to the vehicle ahead due to rapid deceleration of that vehicle or if another vehicle cuts in, the system warns the driver with the chime and ICC system display. Decelerate by depressing the brake pedal to maintain a safe vehicle distance if:

- The chime sounds.
- The vehicle ahead detection indicator blinks.

The warning chime may not sound in some cases when there is a short distance between vehicles. Some examples are:

- When the vehicles are traveling at the same speed and the distance between vehicles is not changing.
- When the vehicle ahead is traveling faster and the distance between vehicles is increasing.
- When a vehicle cuts in near your vehicle.

The warning chime will not sound when:

- The vehicle approaches other vehicles that are parked or moving slowly.
- The accelerator pedal is depressed, overriding the system.

NOTE:

The approach warning chime may sound and the system display may blink when the ICC sensor detects objects on the side of the vehicle or on the side of the road. This may cause the ICC system to decelerate or accelerate the vehicle. The ICC sensor may detect these objects when the vehicle is driven on winding roads, narrow roads, hilly roads, or when entering or exiting a curve. In these cases you will have to manually control the proper distance ahead of your vehicle.

Also, the sensor sensitivity can be affected by vehicle operation (steering maneuver or driving position in the lane) or traffic or vehicle condition (for example, if a vehicle is being driven with some damage).

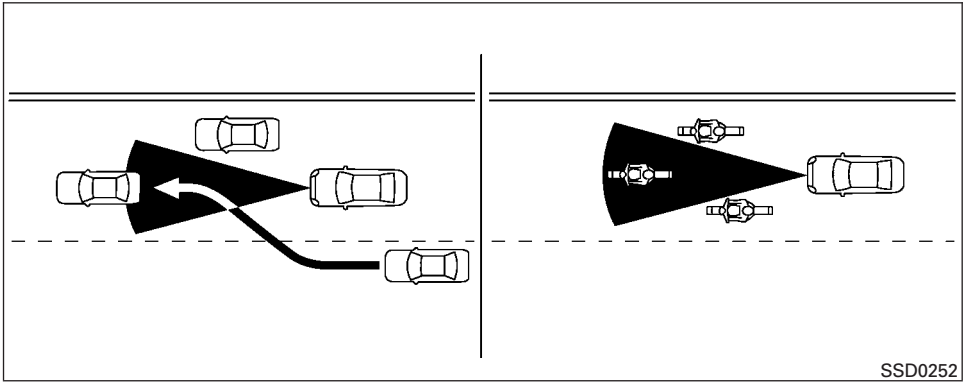

ICC SYSTEM LIMITATIONS

⚠ WARNING

Listed below are the system limitations for the ICC system. Failure to operate the vehicle in accordance with these system limitations could result in serious injury or death.

- **The ICC system is primarily intended for use on straight, dry, open roads with light traffic. It is not advisable to use the ICC system in city traffic or congested areas.**
- **The ICC system will not adapt automatically to road conditions. This system should be used in evenly flowing traffic. Do not use the system on roads with sharp curves, or on icy roads, in heavy rain or in fog.**

- **As there is a performance limit to the distance control function, never rely solely on the ICC system. This system does not correct careless, inattentive or absentminded driving, or overcome poor visibility in rain, fog, or other bad weather. Decelerate the vehicle speed by depressing the brake pedal, depending on the distance to the vehicle ahead and the surrounding circumstances in order to maintain a safe distance between vehicles.**
- **If the vehicle ahead comes to a stop, the vehicle decelerates to a standstill within the limitations of the system. The system will cancel once it judges that the vehicle has come to a standstill and sound a warning chime. To prevent the vehicle from moving, the driver must depress the brake pedal.**
- **Always pay attention to the operation of the vehicle and be ready to manually control the proper following distance. The ICC system may not be able to maintain the selected distance between vehicles (following distance) or selected vehicle speed under some circumstances.**
- **The system may not detect the vehicle in front of you in certain road or weather conditions. To avoid accidents, never use the ICC system under the following conditions:**
  - **On roads where the traffic is heavy or there are sharp curves**
  - **On slippery road surfaces such as on ice or snow, etc.**
  - **During bad weather (rain, fog, snow, etc.)**
  - **When rain, snow or dirt adhere to the bumper around the distance sensor**
  - **On steep downhill roads (the vehicle may go beyond the set vehicle speed and frequent braking may result in overheating the brakes)**
  - **On repeated uphill and downhill roads**
  - **When traffic conditions make it difficult to keep a proper distance between vehicles because of frequent acceleration or deceleration**
  - **Interference by other radar sources.**
- **Do not use the ICC system if you are towing a trailer. The system may not detect a vehicle ahead.**
- **In some road or traffic conditions, a vehicle or object can unexpectedly come into the sensor detection zone and cause automatic braking. Always stay alert and avoid using the ICC system where not recommended in this warning section.**

The radar sensor will not detect the following objects:

- Stationary and slow moving vehicles
- Pedestrians or objects in the roadway
- Oncoming vehicles in the same lane
- Motorcycles traveling offset in the travel lane

The following are some conditions in which the sensor cannot properly detect a vehicle ahead and the system may not operate properly:

- When snow or road spray from traveling vehicles reduces the sensor's detection.

- When excessively heavy baggage is loaded in the rear seat or cargo area of your vehicle.

The ICC system is designed to automatically check the sensor's operation within the limitations of the system.

The detection zone of the ICC sensor is limited. A vehicle ahead must be in the detection zone for the vehicle-to-vehicle distance detection mode to maintain the selected distance from the vehicle ahead.

A vehicle ahead may move outside of the detection zone due to its position within the same lane of travel. Motorcycles may not be detected in the same lane ahead if they are traveling offset from the centerline of the lane. A vehicle that is entering the lane ahead may not be detected until the vehicle has completely moved into the lane.

If this occurs, the ICC system may warn you by blinking the system indicator and sounding the chime. The driver may have to manually control the proper distance away from vehicle traveling ahead.

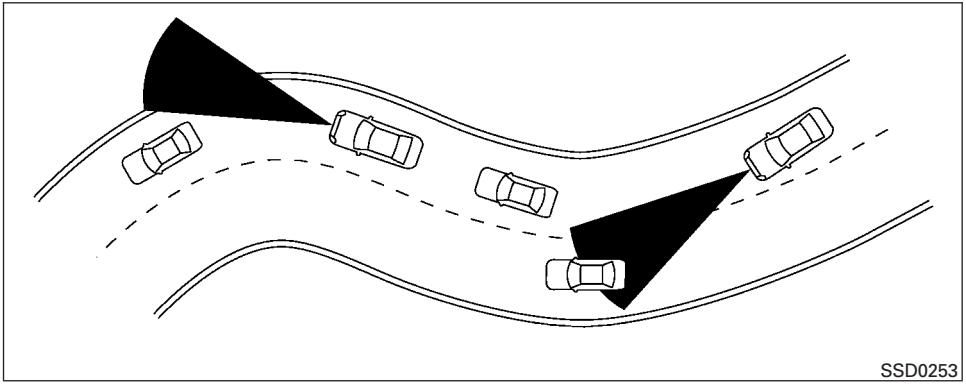

When driving on some roads, such as winding, hilly, curved, narrow roads, or roads which are under construction, the ICC sensor may detect vehicles in a different lane, or may temporarily not detect a vehicle traveling ahead. This may cause the ICC system to decelerate or accelerate the vehicle.

The detection of vehicles may also be affected by vehicle operation (steering maneuver or traveling position in the lane, etc.) or vehicle condition.

If this occurs, the ICC system may warn you by blinking the system indicator and sounding the chime unexpectedly. You will have to manually control the proper distance away from the vehicle traveling ahead.

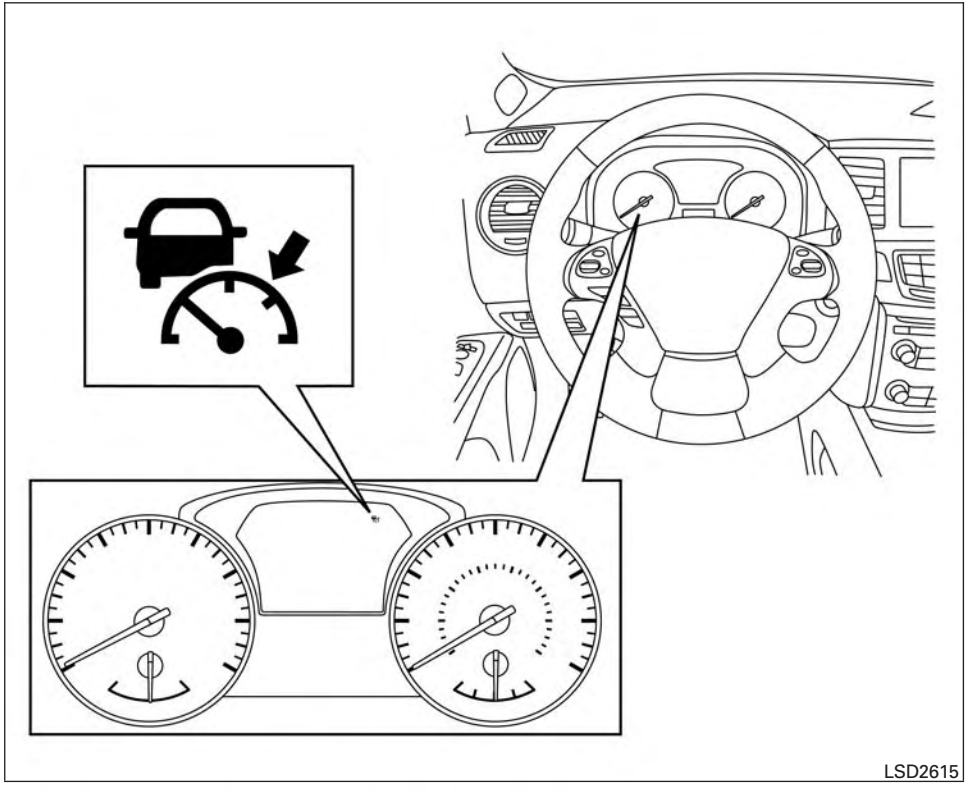

SYSTEM TEMPORARILY UNAVAILABLE

The following are conditions in which the ICC system may be temporarily unavailable. In these instances, the ICC system may not cancel and may not be able to maintain the selected following distance from the vehicle ahead.

Condition A

Under the following conditions, the ICC system is automatically canceled. A chime will sound and the system will not be able to be set:

- When the VDC system is turned off
- When the VDC or ABS operates
- When a vehicle ahead is not detected and your vehicle is traveling below the speed of 15 mph (24 km/h)
- When the system judges the vehicle is at a standstill
- When the shift lever is not in the D (Drive) or Manual mode
- When the parking brake is applied
- When a wheel slips

Action to take

When the conditions listed above are no longer present, turn the system off using the ICC CRUISE ON/OFF switch. Turn the ICC system back on to use the system.

Condition B

When the radar sensor area of the front bumper is covered with dirt or is obstructed, the ICC system will automatically be canceled. If the sensor area is covered with ice, a transparent or translucent vinyl bag, etc., the ICC system may not detect vehicles ahead. In these instances, the ICC system may not cancel and may not be able to maintain the selected following distance from the vehicle ahead. Be sure to check and clean the sensor area.

The system warning light (orange) will illuminate and the “Unavailable: Front Radar Obstruction” warning message will appear in the vehicle information display.

When driving on roads with limited road structures or buildings (for example, or long bridges, deserts, snow fields, driving next to long walls), the system may illuminate the system warning light (orange) and display the “Unavailable: Front Radar Obstruction” message.

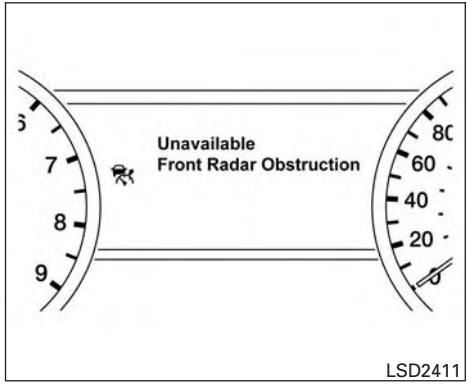

LSD2411

Action to take

If the warning light (orange) comes on, park the vehicle in a safe location and turn the engine off. Check to see if the radar sensor window is blocked. If the radar sensor window is blocked, remove the blocking material. Restart the engine. If the warning light continues to illuminate, have the ICC system checked. It is recommended that you visit a NISSAN dealer for this service.

Condition C

When the ICC system is not operating properly, a chime sounds and the system warning light (orange) will come on.

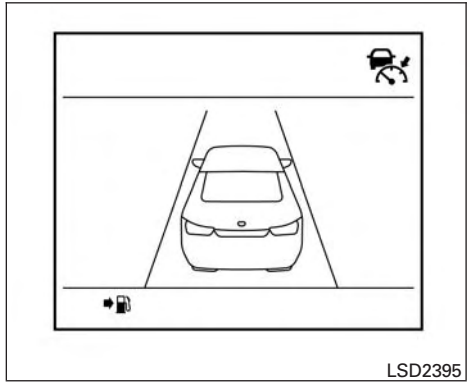
LSD2395

Action to take

If the warning light comes on, park the vehicle in a safe place. Turn the engine off, restart the engine, resume driving and set the ICC system again.

If it is not possible to set the system or the indicator stays on, it may indicate that the system is malfunctioning. Although the vehicle is still drivable under normal conditions, have the vehicle checked. It is recommended that you visit a NISSAN dealer for this service.

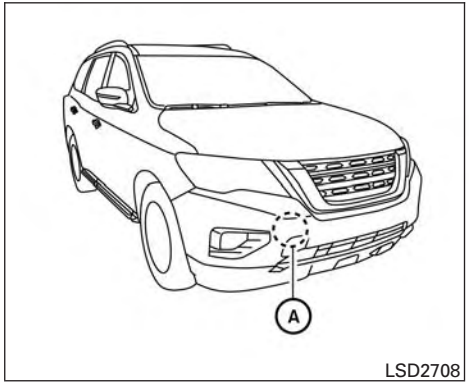

SYSTEM MAINTENANCE

The sensor for the ICC system Ⓐ is located on the front of the vehicle.

To keep the ICC system operating properly, be sure to observe the following:

- Always keep the sensor area clean.
- Do not strike or damage the areas around the sensor. Do not touch or remove the screw located on the sensor. Doing so could cause failure or malfunction. If the sensor is damaged due to an accident, it is recommended that you visit a NISSAN dealer.
- Do not attach a sticker (including transparent material) or install an accessory near the sensor. This could cause failure or malfunction.
- Do not attach metallic objects near the sensor area (brush guard, etc.) This could cause failure or malfunction.
- Do not alter, remove, or paint the front bumper. Before customizing or restoring the front bumper, it is recommended that you visit a NISSAN dealer.

Radio frequency statement

FCC Notice

For USA

This device complies with part 15 of the FCC Rules.

Operation is subject to the following two conditions:

1. This device may not cause harmful interference, and
2. This device must accept any interference received, including interference that may cause undesired operation.

FCC Warning

Changes or modifications not expressly approved by the party responsible for compliance could void the user's authority to operate the equipment.

This equipment has been tested and found to comply with the limits for a Class A digital device, pursuant to Part 15 of the FCC Rules. These limits are designed to provide reasonable protection against harmful interference when the equipment is operated in a commercial environment. This equipment generates, uses, and can radiate radio frequency energy and, if not installed and used in accordance with the instruction manual, may cause harmful interference to radio communications. Operation of this equipment in a residential area is likely to cause harmful interference in which case the user will be required to correct the interference at his own expense.

Radio Frequency Radiation Exposure Information:

This equipment complies with FCC radiation exposure limits set forth for an uncontrolled environment. This equipment should be installed and operated with minimum distance of 20 cm between the radiator and your body.

The transmitter must not be co-located or operating in conjunction with any other antenna or transmitter.

For Canada

This device complies with Industry Canada license-exempt RSS standard(s). Operation is subject to the following two conditions:

1. This device may not cause inteference,
2. This device must accept any interference, including interference that may cause undesired operation of the device.

⚠ WARNING

Failure to follow the warnings and instructions for proper use of the FEB system could result in serious injury or death.

- **The FEB system is a supplemental aid to the driver. It is not a replacement for the driver's attention to traffic conditions or responsibility to drive safely. It cannot prevent accidents due to carelessness or dangerous driving techniques.**
- **The FEB system does not function in all driving, traffic, weather and road conditions.**

The FEB system can assist the driver when there is a risk of a forward collision with the vehicle ahead in the traveling lane.

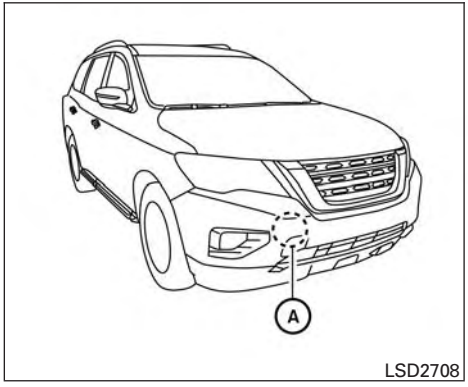

The FEB system uses a radar sensor Ⓐ located behind the lower grille of the front bumper to measure the distance to the vehicle ahead in the same lane.

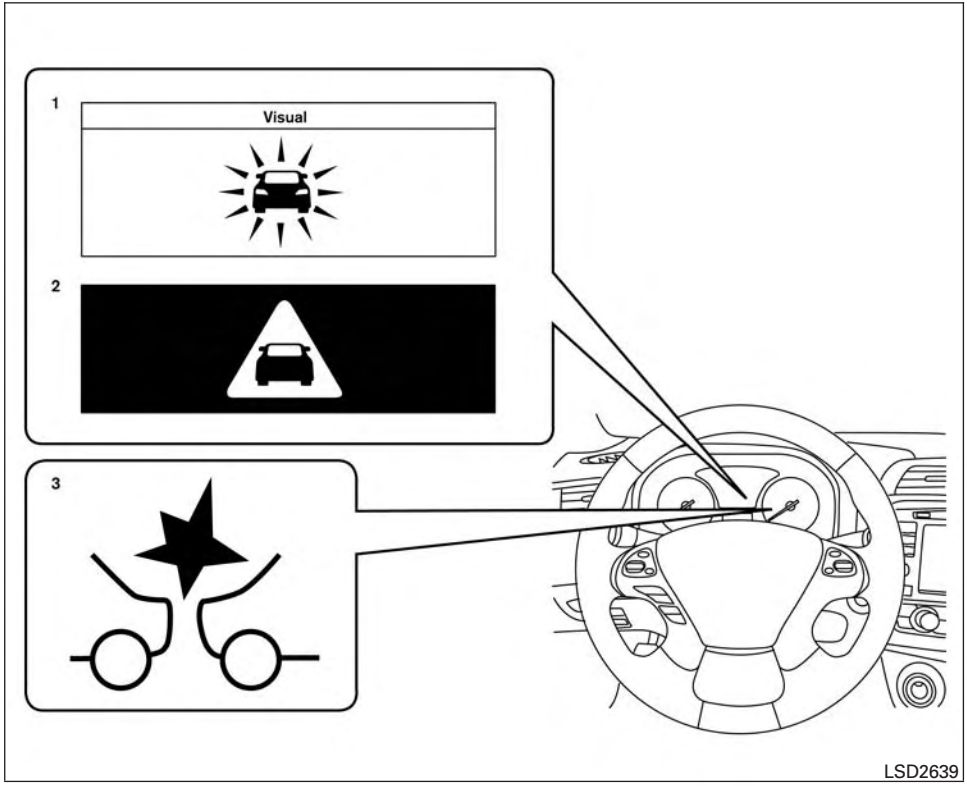

1. Vehicle ahead detection indicator
2. FEB emergency warning indicator
3. FEB system warning light

FEB SYSTEM OPERATION

The FEB system will function when your vehicle is driven at speeds above approximately 3 mph (5 km/h).

If a risk of a forward collision is detected, the FEB system will provide an initial warning to the driver by both a visual and audible alert.

If the driver applies the brakes quickly and forcefully after the warning, and the FEB system detects that there is still the possibility of a forward collision, the system will automatically increase the braking force. If the driver does not take action, the FEB system issues the second visual warning (red) and audible warning and also applies partial braking.

If the risk of a collision becomes imminent, the FEB system applies harder braking automatically.

NOTE:

The vehicle's brake lights come on when braking is performed by the FEB system.

Depending on vehicle speed and distance to the vehicle ahead, as well as driving and roadway conditions, the system may help the driver avoid a forward collision or may help mitigate the consequences of a collision, should one be unavoidable. If the driver is handling the steering wheel, accelerating or braking, the FEB system will function later or will not function.

The automatic braking will cease under the following conditions:

- When the steering wheel is turned as far as necessary to avoid a collision.
- When the accelerator pedal is depressed.
- When there is no longer a vehicle detected ahead.

If the FEB system has stopped the vehicle, the vehicle will remain at a standstill for approximately 2 seconds before the brakes are released.

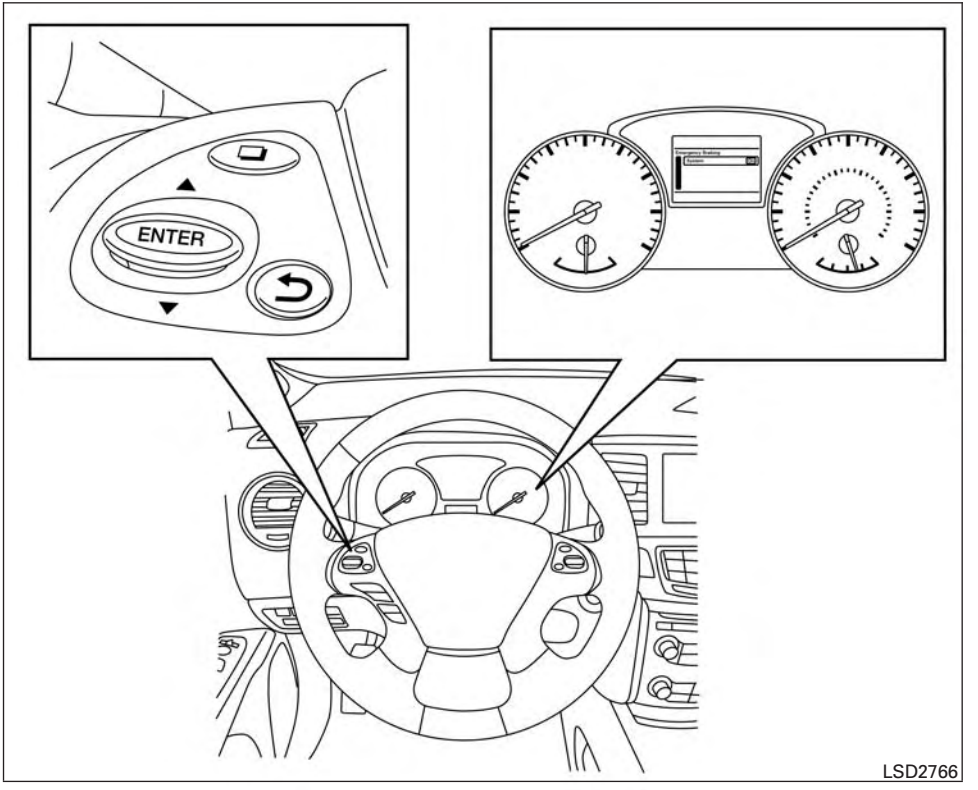

TURNING THE FEB SYSTEM ON/OFF

Perform the following steps to turn the FEB systems ON or OFF.

1. Press the button until “Settings” displays in the vehicle information display and then press ENTER. Use the button to select “Driver Assistance.” Then press the ENTER button.
2. Select “Emergency Braking” and press the ENTER button.
3. Use the ENTER button to turn the system on or off.

When the FEB system is turned off, the FEB system warning light illuminates.

NOTE:

The FEB system will be automatically turned on when the engine is restarted.

FEB SYSTEM LIMITATIONS

WARNING

Listed below are the system limitations for the FEB system. Failure to operate the vehicle in accordance with these system limitations could result in serious injury or death.

- **The FEB system cannot detect all vehicles under all conditions.**
- **The radar sensor does not detect the following objects:**
  - **Pedestrians, animals or obstacles in the roadway.**
  - **Oncoming vehicles.**
  - **Crossing vehicles.**
- **The radar sensor has some performance limitations. If a stationary vehicle is in the vehicle’s path, the FEB system will not function when the vehicle is driven at speeds over approximately 50 mph (80 km/h).**
- **The radar sensor may not detect a vehicle ahead in the following conditions:**
  - **Dirt, ice, snow or other material covering the radar sensor.**
  - **Interference by other radar sources.**
  - **Snow or road spray from traveling vehicles.**
  - **If the vehicle ahead is narrow (e.g. motorcycle).**
  - **When driving on a steep downhill slope or roads with sharp curves.**
- **In some road or traffic conditions, the FEB system may unexpectedly apply partial braking. When acceleration is necessary, continue to depress the accelerator pedal to override the system.**
- **Braking distances increase on slippery surfaces.**
- **The system is designed to automatically check the sensor’s functionality, within certain limitations. The system may not detect some forms of obstructions of the sensor area such as ice, snow, stickers, etc. In these cases, the system may not be able to worn the driver properly. Be sure that you check, clean and clear the sensor area regularly.**
- **Excessive noise will interfere with the warning chime sound, and the chime may not be heard.**

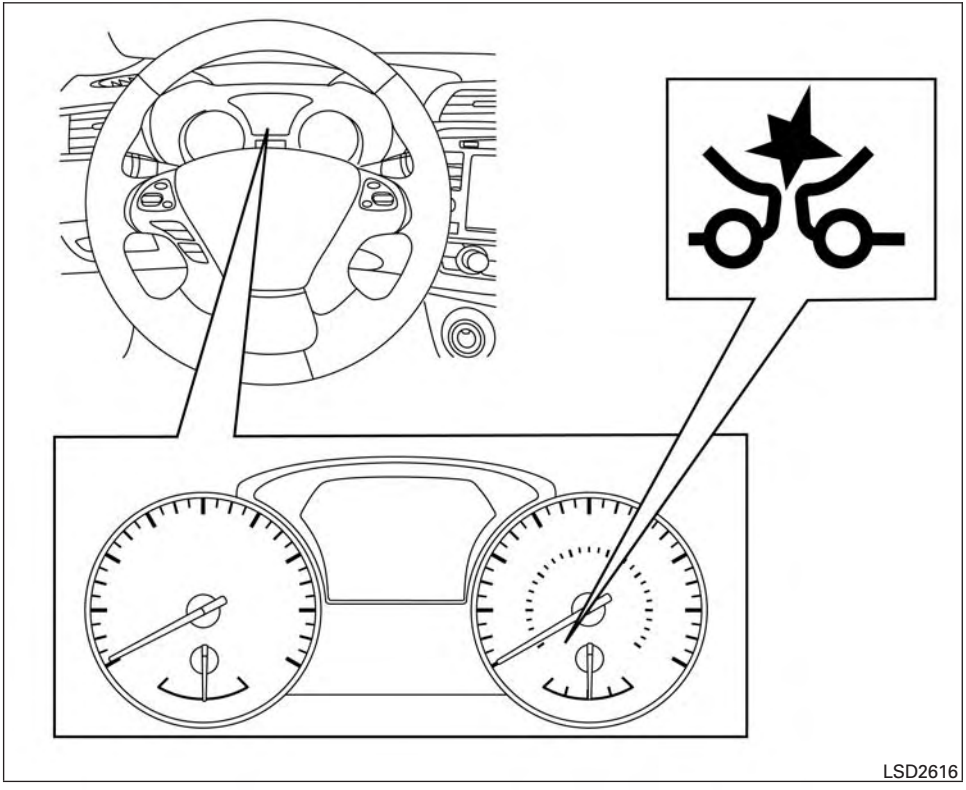

SYSTEM TEMPORARILY UNAVAILABLE

Condition A

When the radar sensor picks up interference from another radar source, making it impossible to detect a vehicle ahead, the FEB system is automatically turned off.

The FEB system warning light (orange) will illuminate.

Action to take

When the above conditions no longer exist, the FEB system will resume automatically.

Condition B

When the sensor area of the front bumper is covered with dirt or is obstructed, making it impossible to detect a vehicle ahead, the FEB system is automatically turned off.

The FEB system warning light (orange) will illuminate and the “Unavailable: Front Radar Obstruction” warning message will appear in the vehicle information display.

When driving on roads with limited road structures or buildings (for example, or long bridges, deserts, snow fields, driving next to long walls), the system may illuminate the system warning light (orange) and display the “Unavailable: Front Radar Obstruction” message.

Action to take

If the warning light (orange) comes on, stop the vehicle in a safe place, place the shift lever in the P (Park) position and turn the engine off. Clean the radar cover on the lower grille with a soft cloth, and restart the engine. If the warning light continues to illuminate, have the FEB system checked. It is recommended that you visit a NISSAN dealer for this service.

SYSTEM MALFUNCTION

If the FEB system malfunctions, it will be turned off automatically, a chime will sound, the FEB warning light (orange) will illuminate and the warning message [Malfunction] will appear in the vehicle information display.

Action to take

If the warning light (orange) comes on, stop the vehicle in a safe location, turn the engine off and restart the engine. If the warning light continues to illuminate, have the FEB system checked. It is recommended that you visit a NISSAN dealer for this service.

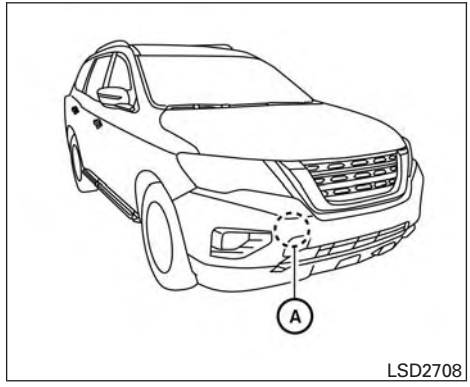

LSD2708

SYSTEM MAINTENANCE

The sensor Ⓐ is located behind the lower grille of the front bumper.

To keep the system operating properly, be sure to observe the following:

- Always keep the sensor area of the front bumper clean.
- Do not strike or damage the areas around the sensor.
- Do not cover or attach stickers or similar objects on the front bumper near the sensor area. This could cause failure or malfunction.
- Do not attach metallic objects near the sensor area (brush guard, etc.). This could cause failure or malfunction.
- Do not alter, remove or paint the front bumper. Before customizing or restoring the front bumper, it is recommended that you visit a NISSAN dealer.

FCC Notice

For USA

This device complies with part 15 of the FCC Rules.

Operation is subject to the following two conditions:

1. This device may not cause harmful interference, and
2. This device must accept any interference received, including interference that may cause undesired operation.

FCC Warning

Changes or modifications not expressly approved by the party responsible for compliance could void the user’s authority to operate the equipment.

This equipment has been tested and found to comply with the limits for a Class A digital device, pursuant to Part 15 of the FCC Rules. These limits are designed to provide reasonable protection against harmful interference when the equipment is operated in a commercial environment. This equipment generates, uses, and can radiate radio frequency energy and, if not installed and used in accordance with the instruction manual, may cause harmful interference to radio communications. Operation of this equipment in a residential area is likely to cause harmful interference in which case the user will be required to correct the interference at his own expense.

Radio Frequency Radiation Exposure Information:

This equipment complies with FCC radiation exposure limits set forth for an uncontrolled environment. This equipment should be installed and operated with minimum distance of 20 cm between the radiator and your body.

The transmitter must not be co-located or operating in conjunction with any other antenna or transmitter.

For Canada

This device complies with Industry Canada license-exempt RSS standard(s). Operation is subject to the following two conditions:

1. This device may not cause inteference,
2. This device must accept any interference, including interference that may cause undesired operation of the device.

⚠ CAUTION

During the first 1,200 miles (2,000 km), follow these recommendations to obtain maximum engine performance and ensure the future reliability and economy of your new vehicle. Failure to follow these recommendations may result in shortened engine life and reduced engine performance.

- Avoid driving for long periods at constant speed, either fast or slow, and do not run the engine over 4,000 RPM.
- Do not accelerate at full throttle in any gear.
- Avoid quick starts.
- Avoid hard braking as much as possible.
- Do not tow a trailer for the first 500 miles (805 kilometers). Your engine, axle or other parts could be damaged.

FUEL EFFICIENT DRIVING TIPS

Follow these easy-to-use Fuel Efficient Driving Tips to help you achieve the most fuel economy from your vehicle.

1. **Use Smooth Accelerator and Brake Pedal Application**
   - Avoid rapid starts and stops.
   - Use smooth, gentle accelerator and brake application whenever possible.
   - Maintain constant speed while commuting and coast whenever possible.
2. **Maintain Constant Speed**
   - Look ahead to try and anticipate and minimize stops.
   - Synchronizing your speed with traffic lights allows you to reduce your number of stops.
   - Maintaining a steady speed can minimize red light stops and improve fuel efficiency.
3. **Use Air Conditioning (A/C) at Higher Vehicle Speeds**
   - Below 40 mph (64 km/h), it is more efficient to open windows to cool the vehicle due to reduced engine load.
   - Above 40 mph (64 km/h), it is more efficient to use A/C to cool the vehicle due to increased aerodynamic drag.
   - Recirculating the cool air in the cabin when the A/C is on reduces cooling load.
4. **Drive at Economical Speeds and Distances**
   - Observing the speed limit and not exceeding 60 mph (97 km/h) (where legally allowed) can improve fuel efficiency due to reduced aerodynamic drag.
   - Maintaining a safe following distance behind other vehicles reduces unnecessary braking.
   - Safely monitoring traffic to anticipate changes in speed permits reduced braking and smooth acceleration changes.
   - Select a gear range suitable to road conditions.
5. **Use Cruise Control**
   - Using cruise control during highway driving helps maintain a steady speed.
   - Cruise control is particularly effective in providing fuel savings when driving on flat terrains.
6. **Plan for the Shortest Route**
   - Utilize a map or navigation system to determine the best route to save time.
7. **Avoid Idling**
   - Shutting off your engine when safe for stops exceeding 30–60 seconds saves fuel and reduces emissions.
8. **Buy an Automated Pass for Toll Roads**
   - Automated passes permit drivers to use special lanes to maintain cruising speed through the toll and avoid stopping and starting.
9. **Winter Warm Up**
   - Limit idling time to minimize impact to fuel economy.
   - Vehicles typically need no more than 30 seconds of idling at start-up to effectively circulate the engine oil before driving.
   - Your vehicle will reach its ideal operating temperature more quickly while driving versus idling.
10. **Keeping your Vehicle Cool**
    - Park your vehicle in a covered parking area or in the shade whenever possible.
    - When entering a hot vehicle, opening the windows will help to reduce the inside temperature faster, resulting in reduced demand on your A/C system.

- Keep your engine tuned up.
- Follow the recommended scheduled maintenance.
- Keep the tires inflated to the correct pressure. Low tire pressure increases tire wear and lowers fuel economy.
- Keep the wheels in correct alignment. Improper alignment increases tire wear and lowers fuel economy.
- Use the recommended viscosity engine oil. For additional information, refer to “Engine oil and oil filter recommendations” in the “Technical and consumer information” section of this manual.

4X4–I SYSTEM OPERATION

WARNING

- **Do not drive beyond the performance capability of the tires. Accelerating quickly, sharp steering maneuvers or sudden braking may cause loss of control, even with Intelligent 4WD engaged.**
- **For 4WD equipped vehicles, do not attempt to raise two wheels off the ground and shift the transmission to any drive or reverse position with the engine running. Doing so may result in drivetrain damage or unexpected vehicle movement which could result in serious personal injury or vehicle damage.**
- **Do not attempt to test a 4WD equipped vehicle on a 2-wheel dynamometer (such as the dynamometers used by some states for emissions testing) or similar equipment even if the other 2 wheels are raised off the ground. Make sure that you inform the test facility personnel that your vehicle is equipped with 4WD before it is placed on a dynamometer. Using the wrong test equipment may result in drivetrain damage or unexpected vehicle movement which could result in serious personal injury or vehicle damage.**

CAUTION

- **Do not operate the engine on a free roller when any of the wheels are raised.**
- **If you use the free roller, rotate 4 wheels with the same speed without raising any wheels.**
- **If a 4WD warning message is displayed while driving there may be a malfunction in the 4WD system. Reduce the vehicle speed immediately and have your vehicle checked. It is recommended that you visit a NISSAN dealer as soon as possible.**
- **If the 4WD high temperature message is displayed while you are driving, pull off the road in a safe area, and idle the engine. The driving mode will change to 2WD to prevent the 4WD system from malfunctioning. If the warning message turns off, you can drive again.**
- **If the incorrect tire size message is displayed while you are driving, pull off the road in a safe area with the engine idling. Check that all tire sizes are the same, that the tire pressure is correct and that the tires are not excessively worn.**

- **If a warning message continues to be displayed after the above operations, have your vehicle checked as soon as possible. It is recommended that you visit a NISSAN dealer for this service.**

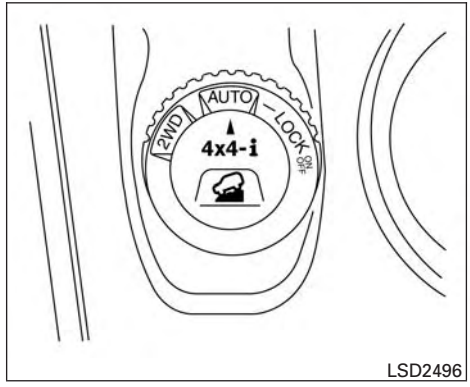

4WD shift switch

The 4WD system is used to select the 2WD, AUTO or LOCK mode depending on the driving conditions.

Turn the 4WD mode switch, located on the center console, to select 2WD, AUTO, or LOCK.

- 2WD – Turn the 4WD mode switch to the 2WD position. The 2WD indicator light in the vehicle information display illuminates.
- AUTO – Turn the 4WD mode switch to the neutral (AUTO) position. The 4WD AUTO indicator light in the vehicle information display illuminates.
- LOCK – To engage the LOCK mode, turn the 4WD mode switch to the LOCK position. The switch will return to the AUTO position automatically and the 4WD LOCK indicator light in the vehicle information display illuminates. To disengage the LOCK mode, turn the switch to the LOCK position again. The switch will return to the AUTO position automatically, and the 4WD LOCK indicator light turns into the AUTO indicator light. The LOCK mode will automatically be canceled when the ignition switch is turned to the OFF position.

4WD mode	Wheels driven	4WD mode indicator light	Use conditions
2WD	Front only – This mode is used when driving on a normal road *1	2WD	For driving on dry paved roads.
AUTO	Distribution of torque to the front and rear wheels changes automatically depending on road conditions encountered. This results in improved driving stability.	AUTO	For driving on paved or slippery roads.
LOCK	4-Wheel Drive *2 *3	LOCK	For driving on rough roads.

*1 The 2WD mode may change to the 4WD mode automatically depending on the driving conditions.

*2 The LOCK mode will change to the AUTO mode automatically when the vehicle has been driven at a high speed. The 4WD LOCK indicator light turns into the AUTO indicator light.

*3 The LOCK mode will automatically be canceled when the ignition switch is turned to the OFF position.

4WD shift tips

- If the 4WD mode switch is operated while making a turn, accelerating or decelerating, or if the ignition switch is turned off while in the AUTO or LOCK mode, you may feel a jolt. This is normal.
- The oil temperature of power train parts will increase if the vehicle is continuously operated under conditions where the difference between the front and rear wheels is large (wheel slip), such as when driving the vehicle on rough roads through sand or mud or when freeing a stuck vehicle. In these cases, the 4WD mode changes to the 2WD mode to protect the powertrain parts.
- Brake distance in the 4WD mode is the same as 2WD.

⚠ CAUTION

- **Depending on the driving condition, the 4WD mode may automatically change from 2WD to 4WD even when the 2WD mode is selected. If this occurs while driving, the 4WD mode indicator light will not illuminate.**
- **Do not start the engine with the 4WD mode switch in any mode in the following cases:**
  - **when the vehicle is placed on a freeroller or jacking up the vehicle with the front tires raised and the rear tires on the ground.**
  - **when towing the vehicle with the rear tires raised from the ground.**
- **Operate the 4WD mode switch only when driving straight. Do not operate the 4WD mode switch when making a turn or backing up.**
- **Do not operate the 4WD mode switch with the front wheel spinning.**
- **Engine idling speed is high while warming up the engine. Be especially careful when starting or driving on slippery surfaces with the 4WD mode switch set in the AUTO mode.**

4WD mode indicator lights

The 2WD, 4WD AUTO and LOCK mode indicator lights are located in the vehicle information display.

The 4WD mode indicator lights will display the mode selected by the 4WD mode switch while the engine is running.

The 4WD AUTO indicator light illuminates when selecting the AUTO mode.

The 4WD LOCK indicator light illuminates when selecting the LOCK mode and the 2WD indicator light illuminates when selecting the 2WD mode.

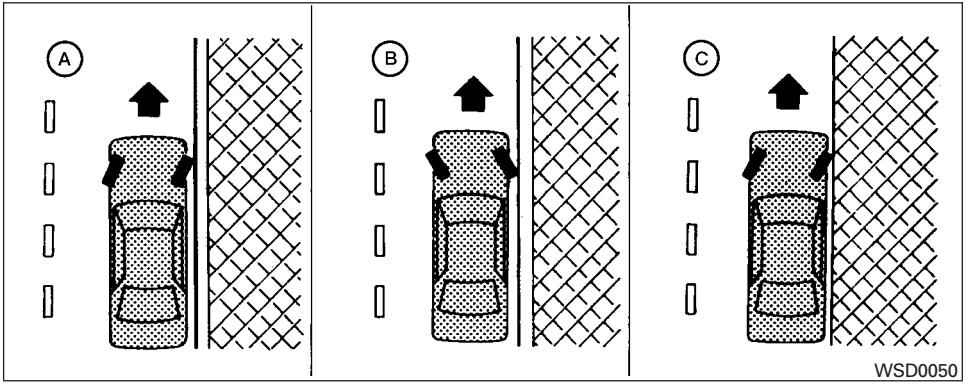

⚠WARNING

- **Do not stop or park the vehicle over flammable materials such as dry grass, waste paper or rags. They may ignite and cause a fire.**
- **Safe parking procedures require that both the parking brake be set and the transmission placed into P (Park). Failure to do so could cause the vehicle to move unexpectedly or roll away and result in an accident. Make sure the shift lever has been pushed as far forward as it can go and cannot be moved without depressing the foot brake pedal.**
- **Never leave the engine running while the vehicle is unattended.**
- **To help avoid risk of injury or death through unintended operation of the vehicle and/or its systems, do not leave children, people who require the assistance of others or pets unattended in your vehicle. Additionally, the temperature inside a closed vehicle on a warm day can quickly become high enough to cause a significant risk of injury or death to people and pets.**

1. Firmly apply the parking brake.
2. Move the shift lever to the P (Park) position.
3. To help prevent the vehicle from rolling into traffic when parked on an incline, it is a good practice to turn the wheels as illustrated.
   - HEADED DOWNHILL WITH CURB Ⓐ:

   Turn the wheels into the curb and move the vehicle forward until the curb side wheel gently touches the curb.

   - HEADED UPHILL WITH CURB Ⓑ:

   Turn the wheels away from the curb and move the vehicle back until the curb side wheel gently touches the curb.

   - HEADED UPHILL OR DOWNHILL, NO CURB Ⓒ:

   Turn the wheels toward the side of the road so the vehicle will move away from the center of the road if it moves.
4. Place the ignition switch in the LOCK position.

⚠ WARNING

- **If the engine is not running or is turned off while driving, the power assist for the steering will not work. Steering will be harder to operate.**
- **When the power steering warning light illuminates with the engine running, there will be no power assist for the steering. You will still have control of the vehicle, but the steering will be harder to operate. Have the power steering system checked. It is recommended that you visit a NISSAN dealer for this service.**

The power steering system is designed to provide power assist while driving to operate the steering wheel with light force.

When the steering wheel is operated repeatedly or continuously while parking or driving at a very low speed, the power assist for the steering wheel will be reduced. This is to prevent overheating of the power steering system and protect it from getting damaged. While the power assist is reduced, steering wheel operation will become heavy. When the temperature of the power steering system goes down, the power assist level will return to normal. Avoid repeating such steering wheel operations that could cause the power steering system to overheat.

You may hear a sound when the steering wheel is operated quickly. However, this is not a malfunction.

If the electric power steering warning light illuminates while the engine is running, it may indicate the power steering system is not functioning properly and may need servicing. Have the power steering system checked. It is recommended that you visit a NISSAN dealer for this service.

When the electric power steering warning light illuminates with the engine running, there will be no power assist for the steering, but you will still have control of the vehicle. At this time, greater steering effort is required to operate the steering wheel, especially in sharp turns and at low speeds.

For additional information, refer to “Power steering warning light” in the “Instruments and controls” section of this manual.

The brake system has two separate hydraulic circuits. If one circuit malfunctions, you will still have braking at two wheels.

BRAKE PRECAUTIONS

Vacuum assisted brakes

The brake booster aids braking by using engine vacuum. If the engine stops, you can stop the vehicle by depressing the brake pedal. However, greater foot pressure on the brake pedal will be required to stop the vehicle and stopping distance will be longer.

Using the brakes

Avoid resting your foot on the brake pedal while driving. This will overheat the brakes, wear out the brake pads faster, and reduce gas mileage.

To help reduce brake wear and to prevent the brakes from overheating, reduce speed and downshift to a lower gear before going down a slope or long grade. Overheated brakes may reduce braking performance and could result in loss of vehicle control.

⚠ WARNING

- **While driving on a slippery surface, be careful when braking, accelerating or downshifting. Abrupt braking or accelerating could cause the wheels to skid and result in an accident.**
- **If the engine is not running or is turned off while driving, the power assist for the brakes will not work. Braking will be harder.**

Wet brakes

When the vehicle is washed or driven through water, the brakes may get wet. As a result, your braking distance will be longer and the vehicle may pull to one side during braking.

To dry the brakes, drive the vehicle at a safe speed while lightly pressing the brake pedal to heat up the brakes. Do this until the brakes return to normal. Avoid driving the vehicle at high speeds until the brakes function correctly.

Parking brake break-in

Break in the parking brake shoes whenever the stopping effect of the parking brake is weakened or whenever the parking brake shoes and/or drums/rotors are replaced, in order to assure the best braking performance.

This procedure is described in the vehicle service manual. It is recommended that you visit a NISSAN dealer for this service.

ANTI-LOCK BRAKING SYSTEM (ABS)

⚠ WARNING

- **The ABS is a sophisticated device, but it cannot prevent accidents resulting from careless or dangerous driving techniques. It can help maintain vehicle control during braking on slippery surfaces. Remember that stopping distances on slippery surfaces will be longer than on normal surfaces even with ABS. Stopping distances may also be longer on rough, gravel or snow covered roads, or if you are using tire chains. Always maintain a safe distance from the vehicle in front of you. Ultimately, the driver is responsible for safety.**
- **Tire type and condition may also affect braking effectiveness.**
  - **When replacing tires, install the specified size of tires on all four wheels.**
  - **When installing a spare tire, make sure that it is the proper size and type as specified on the Tire and Loading Information label. For additional information, refer to “Tire and Loading Information label” in the “Technical and consumer information” section of this manual.**
  - **For additional information, refer to “Wheels and tires” in the “Do-it-yourself” section of this manual.**

The ABS controls the brakes so the wheels do not lock during hard braking or when braking on slippery surfaces. The system detects the rotation speed at each wheel and varies the brake fluid pressure to prevent each wheel from locking and sliding. By preventing each wheel from locking, the system helps the driver maintain steering control and helps to minimize swerving and spinning on slippery surfaces.

Using the system

Depress the brake pedal and hold it down. Depress the brake pedal with firm steady pressure, but do not pump the brakes. The ABS will operate to prevent the wheels from locking up. Steer the vehicle to avoid obstacles.

⚠ WARNING

Do not pump the brake pedal. Doing so may result in increased stopping distances.

Self-test feature

The ABS includes electronic sensors, electric pumps, hydraulic solenoids and a computer. The computer has a built-in diagnostic feature that tests the system each time you start the engine and move the vehicle at a low speed in forward or reverse. When the self-test occurs, you may hear a "clunk" noise and/or feel a pulsation in the brake pedal. This is normal and does not indicate a malfunction. If the computer senses a malfunction, it switches the ABS off and illuminates the ABS warning light on the instrument panel. The brake system then operates normally, but without anti-lock assistance.

If the ABS warning light illuminates during the self-test or while driving, have the vehicle checked. It is recommended that you visit a NISSAN dealer for this service.

Normal operation

The ABS operates at speeds above 3 - 6 mph (5 - 10 km/h). The speed varies according to road conditions.

When the ABS senses that one or more wheels are close to locking up, the actuator rapidly applies and releases hydraulic pressure. This action is similar to pumping the brakes very quickly. You may feel a pulsation in the brake pedal and hear a noise from under the hood or feel a vibration from the actuator when it is operating. This is normal and indicates that the ABS is operating properly. However, the pulsation may indicate that road conditions are hazardous and extra care is required while driving.

BRAKE ASSIST

When the force applied to the brake pedal exceeds a certain level, the brake assist is activated generating greater braking force than a conventional brake booster even with light pedal force.

⚠ WARNING

The brake assist is only an aid to assist braking operation and is not a collision warning or avoidance device. it is the drivers responsibility to stay alert, drive safely and be in control of the vehicle at all times.

VEHICLE DYNAMIC CONTROL (VDC) SYSTEM

The VDC system uses various sensors to monitor driver inputs and vehicle motion. Under certain driving conditions, the VDC system helps to perform the following functions:

- Controls brake pressure to reduce wheel slip on one slipping drive wheel so power is transferred to a non slipping drive wheel on the same axle.
- Controls brake pressure and engine output to reduce drive wheel slip based on vehicle speed (traction control function).
- Controls brake pressure at individual wheels and engine output to help the driver maintain control of the vehicle in the following conditions:
  - Understeer (vehicle tends to not follow the steered path despite increased steering input)
  - Oversteer (vehicle tends to spin due to certain road or driving conditions)

The VDC system can help the driver to maintain control of the vehicle, but it cannot prevent loss of vehicle control in all driving situations.

When the VDC system operates, the indicator in the instrument panel flashes so note the following:

- The road may be slippery or the system may determine some action is required to help keep the vehicle on the steered path.
- You may feel a pulsation in the brake pedal and hear a noise or vibration from under the hood. This is normal and indicates that the VDC system is working properly.
- Adjust your speed and driving to the road conditions.

For additional information, refer to “Slip indicator light” and “Vehicle Dynamic Control (VDC) OFF indicator light” in the “Instruments and controls” section of this manual.

If a malfunction occurs in the system, the and indicator lights come on in the instrument panel. The VDC system automatically turns off when these indicator lights are on.

The VDC OFF switch is used to turn off the VDC system. The indicator illuminates to indicate the VDC system is off.

When the VDC switch is used to turn off the system, the VDC system still operates to prevent one drive wheel from slipping by transferring power to a non slipping drive wheel. The indicator flashes if this occurs. All other VDC functions are off and the indicator will not flash.

The VDC system is automatically reset to on when the ignition switch is placed in the OFF position then back to the ON position.

The computer has a built in diagnostic feature that tests the system each time you start the engine and move the vehicle forward or in reverse at a slow speed. When the self-test occurs, you may hear a clunk noise and/or feel a pulsation in the brake pedal. This is normal and is not an indication of a malfunction.

WARNING

- **The VDC system is designed to help the driver maintain stability but does not prevent accidents due to abrupt steering operation at high speeds or by careless or dangerous driving techniques. Reduce vehicle speed and be especially careful when driving and cornering on slippery surfaces and always drive carefully.**
- **Do not modify the vehicle’s suspension. If suspension parts such as shock absorbers, struts, springs, stabilizer bars, bushings and wheels are not NISSAN recommended for your vehicle or are extremely deteriorated, the VDC system may not operate properly. This could adversely affect vehicle handling performance, and the indicator may flash or both the and indicator lights may illuminate.**
- **If brake related parts such as brake pads, rotors and calipers are not NISSAN recommended or are extremely deteriorated, the VDC system may not operate properly and both the and the indicator lights may illuminate.**
- **If engine control related parts are not NISSAN recommended or are extremely deteriorated, both the and indicator lights may illuminate.**

- **When driving on extremely inclined surfaces such as higher banked corners, the VDC system may not operate properly and the indicator may flash or both the and indicator lights may illuminate. Do not drive on these types of roads.**
- **When driving on an unstable surface such as a turntable, ferry, elevator or ramp, the indicator may flash or both the and indicator lights may illuminate. This is not a malfunction. Restart the engine after driving onto a stable surface.**
- **If wheels or tires other than the NISSAN recommended ones are used, the VDC system may not operate properly and the indicator may flash or both the and indicator lights may illuminate.**
- **The VDC system is not a substitute for winter tires or tire chains on a snow covered road.**

RISE-UP AND BUILD-UP

The system gradually adjusts braking power during normal braking to help provide an enhanced brake feel.

BRAKE FORCE DISTRIBUTION

During braking while driving through turns, the system optimizes the distribution of force to each of the four wheels depending on the radius of the turn.

WARNING

- **The VDC system is designed to help the driver maintain stability but does not prevent accidents due to abrupt steering operation at high speeds or by careless or dangerous driving techniques. Reduce vehicle speed and be especially careful when driving and cornering on slippery surfaces and always drive carefully.**
- **Do not modify the vehicle's suspension. If suspension parts such as shock absorbers, struts, springs, stabilizer bars, bushings and wheels are not NISSAN recommended for your vehicle or are extremely deteriorated, the VDC system may not operate properly. This could adversely affect vehicle handling performance, and the indicator may flash or both the and indicator lights may illuminate.**
- **If brake related parts such as brake pads, rotors and calipers are not NISSAN recommended or are extremely deteriorated, the VDC system may not operate properly and both the and the indicator lights may illuminate.**
- **If engine control related parts are not NISSAN recommended or are extremely deteriorated, both the and indicator lights may illuminate.**

- **When driving on extremely inclined surfaces such as higher banked corners, the VDC system may not operate properly and the indicator may flash or both the and indicator lights may illuminate. Do not drive on these types of roads.**
- **When driving on an unstable surface such as a turntable, ferry, elevator or ramp, the indicator may flash or both the and indicator lights may illuminate. This is not a malfunction. Restart the engine after driving onto a stable surface.**
- **If wheels or tires other than the NISSAN recommended ones are used, the VDC system may not operate properly and the indicator may flash or both the and indicator lights may illuminate.**
- **The VDC system is not a substitute for winter tires or tire chains on a snow covered road.**

HILL DESCENT CONTROL SYSTEM (if so equipped)

WARNING

- **Never rely solely on the hill descent control system to control vehicle speed when driving on steep downhill grades. Always drive carefully and attentively when using the hill descent control system and decelerate the vehicle speed by depressing the brake pedal if necessary. Be especially careful when driving on frozen, muddy or extremely steep downhill roads. Failure to control vehicle speed may result in a loss of control of the vehicle and possible serious injury or death.**
- **The hill descent control may not control the vehicle speed on a hill under all load or road conditions. Always be prepared to depress the brake pedal to control vehicle speed. Failure to do so may result in a collision or serious personal injury.**

The hill descent control system can only be activated when the 4WD LOCK switch is engaged.

The hill descent control system helps maintain vehicle speed when driving under 15 mph (25 km/h) on steeper downhill grades. Hill descent control is useful when engine braking alone cannot control vehicle speed. Hill descent control applies the vehicle brakes to control vehicle speed allowing the driver to concentrate on steering while reducing the burden of brake and accelerator operation.

If the hill descent control light is blinking, the hill descent control is engaged; however, the hill descent control will not control the vehicle speed.

- Once the system is activated, the indicator light will remain on in the instrument panel. For additional information, refer to “Hill descent control system on indicator light” in the “Instruments and controls” section of this manual.

If the accelerator or brake pedal is depressed while the hill descent control system is on, the system will stop operating temporarily. As soon as the accelerator or brake pedal is released, the hill descent control system begins to function again if the hill descent control operating conditions are fulfilled.

For the best results, when descending steep downhill grades, the hill descent control switch should be ON and the shift lever in L (Low gear) for engine braking.

HILL START ASSIST SYSTEM

⚠ WARNING

- **Never rely solely on the hill start assist system to prevent the vehicle from moving backward on a hill. Always drive carefully and attentively. Depress the brake pedal when the vehicle is stopped on a steep hill. Be especially careful when stopped on a hill on frozen or muddy roads. Failure to prevent the vehicle from rolling backwards may result in a loss of control of the vehicle and possible serious injury or death.**
- **The hill start assist system is not designed to hold the vehicle at a standstill on a hill. Depress the brake pedal when the vehicle is stopped on a steep hill. Failure to do so may cause the vehicle to roll backwards and may result in a collision or serious personal injury.**
- **The hill start assist may not prevent the vehicle from rolling backwards on a hill under all load or road conditions. Always be prepared to depress the brake pedal to prevent the vehicle from rolling backwards. Failure to do so may result in a collision or serious personal injury.**

The hill start assist system automatically keeps the brakes applied to help prevent the vehicle from rolling backward in the time it takes the driver to release the brake pedal and apply the accelerator when the vehicle is stopped on a hill.

Hill start assist will operate automatically under the following conditions:

- The shift lever is shifted to a forward or reverse gear.
- The vehicle is stopped completely on a hill by applying the brake.

The maximum holding time is 2 seconds. After 2 seconds the vehicle will begin to roll back and hill start assist will stop operating completely.

Hill start assist will not operate when the shift lever is shifted into N (Neutral) or P (Park) or on a flat and level road.

REAR SONAR SYSTEM (RSS) (if so equipped)

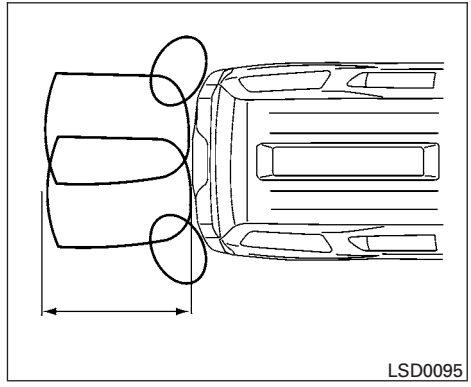

⚠ WARNING

- **Always turn and look back before backing up. The RSS is not a substitute for proper backing procedures.**
- **Read and understand the limitations of the rear sonar system as contained in this section. Inclement weather may affect the function of the RSS; this may include reduced performance or a false activation.**
- **This system is not designed to prevent contact with small or moving objects.**

- **The system is designed as an aid to the driver in detecting large stationary objects to help avoid damaging the vehicle. The system will not detect small objects below the bumper, and may not detect objects close to the bumper or on the ground.**
- **If your vehicle sustains damage to the rear bumper fascia, leaving it misaligned or bent, the sensing zone may be altered causing inaccurate measurement of obstacles or false alarms.**

The RSS sounds a tone to warn the driver of obstacles near the rear bumper when the shift lever is in R (Reverse). The system may not detect objects at speeds above 3 mph (5 km/h) and may not detect certain angular or moving objects.

The RSS detects obstacles up to 5.9 ft (1.8 m) from the rear bumper with a decreased coverage area at the outer corners of the bumper (refer to the illustration for approximate zone coverage areas). As you move closer to the obstacle, the rate of the tone increases. When the obstacle is less than 10 in (25.0 cm) away, the tone will sound continuously. If the RSS detects a stationary or receding object further than 10 in. (25.0 cm) from the side of the vehicle, the tone will sound for only 3 seconds. Once the system detects an object approaching, the tone will sound again.

The RSS automatically turns on when the shift lever is placed in R (Reverse) and the ignition switch is placed in the ON position. The RSS can be turned off in the vehicle information display. For additional information, refer to “Vehicle information display” in the “Instruments and controls” section of this manual. To turn the RSS off, the ignition switch must be placed in the ON position.

Keep the RSS sensors (located on the rear bumper fascia) free from snow, ice and large accumulations of dirt (do not clean the sensors with sharp objects). If the sensors are covered, it will affect the accuracy of the RSS.

FREEING A FROZEN DOOR LOCK

To prevent a door lock from freezing, apply deicer through the key hole. If the lock becomes frozen, heat the key before inserting it into the key hole, or use the NISSAN Intelligent Key®.

ANTIFREEZE

In the winter when it is anticipated that the temperature will drop below 32°F (0°C), check the antifreeze to assure proper winter protection. For additional information, refer to “Engine cooling system” in the “Do-it-yourself” section of this manual.

BATTERY

If the battery is not fully charged during extremely cold weather conditions, the battery fluid may freeze and damage the battery. To maintain maximum efficiency, the battery should be checked regularly. For additional information, refer to “Battery” in the “Do-it-yourself” section of this manual.

DRAINING OF COOLANT WATER

If the vehicle is to be left outside without antifreeze, drain the cooling system, including the engine block. Refill before operating the vehicle. For additional information, refer to “Changing engine coolant” in the “Do-it-yourself” section of this manual.

TIRE EQUIPMENT

1. SUMMER tires have a tread designed to provide superior performance on dry pavement. However, the performance of these tires will be substantially reduced in snowy and icy conditions. If you operate your vehicle on snowy or icy roads, NISSAN recommends the use of MUD & SNOW or ALL SEASON TIRES on all four wheels. It is recommended that you visit a NISSAN dealer for the tire type, size, speed rating and availability information.
2. For additional traction on icy roads, studded tires may be used. However, some U.S. states and Canadian provinces prohibit their use. Check local, state and provincial laws before installing studded tires.

Skid and traction capabilities of studded snow tires on wet or dry surfaces may be poorer than that of non-studded snow tires.

3. Tire chains may be used. For additional information, refer to "Tire chains" in the "Do-it-yourself" section of this manual.

SPECIAL WINTER EQUIPMENT

It is recommended that the following items be carried in the vehicle during winter:

- A scraper and stiff-bristled brush to remove ice and snow from the windows and wiper blades.
- A sturdy, flat board to be placed under the jack to give it firm support.
- A shovel to dig the vehicle out of snowdrifts.
- Extra washer fluid to refill the windshield-washer fluid reservoir.

DRIVING ON SNOW OR ICE

⚠ WARNING

- **Wet ice (32°F, 0°C and freezing rain), very cold snow or ice can be slick and very hard to drive on. The vehicle will have much less traction or "grip" under these conditions. Try to avoid driving on wet ice until the road is salted or sanded.**
- **Whatever the condition, drive with caution. Accelerate and slow down with care. If accelerating or downshifting too fast, the drive wheels will lose even more traction.**
- **Allow more stopping distance under these conditions. Braking should be started sooner than on dry pavement.**
- **Allow greater following distances on slippery roads.**
- **Watch for slippery spots (glare ice). These may appear on an otherwise clear road in shaded areas. If a patch of ice is seen ahead, brake before reaching it. Try not to brake while on the ice, and avoid any sudden steering maneuvers.**
- **Do not use the cruise control on slippery roads.**
- **Snow can trap dangerous exhaust gases under your vehicle. Keep snow clear of the exhaust pipe and from around your vehicle.**

ENGINE BLOCK HEATER (if so equipped)

Engine block heaters are used to assist with cold temperature starting.

The engine block heater should be used when the outside temperature is 20°F (-7°C) or lower.

⚠ WARNING

- **Do not use your engine block heater with an ungrounded electrical system or a 2-pronged adapter. You can be seriously injured by an electrical shock if you use an ungrounded connection.**
- **Disconnect and properly store the engine block heater cord before starting the engine. Damage to the cord could result in an electrical shock and can cause serious injury.**
- **Use a heavy-duty 3-wire, 3-pronged extension cord rated for at least 10 A. Plug the extension cord into a Ground Fault Interrupt (GFI) protected, grounded 110-VAC outlet. Failure to use the proper extension cord or a grounded outlet can result in a fire or electrical shock and cause serious personal injury.**

To use the engine block heater:

1. Turn the engine off.
2. Open the hood and unwrap the engine block heater cord.
3. Plug the engine block heater cord into a grounded 3-wire, 3-pronged extension cord.
4. Plug the extension cord into a Ground Fault Interrupt (GFI) protected, grounded 110-volt AC (VAC) outlet.
5. The engine block heater must be plugged in for at least 2 - 4 hours, depending on outside temperatures, to properly warm the engine coolant. Use an appropriate timer to turn the engine block heater on.
6. Before starting the engine, unplug and properly store the cord to keep it away from moving parts.

6 In case of emergency

Hazard warning flasher switch 6-2
Emergency engine shut off 6-2
Flat tire 6-3
Tire Pressure Monitoring System (TPMS). 6-3
Changing a flat tire 6-3
Jump starting 6-9
Push starting 6-11
If your vehicle overheats 6-11
Towing your vehicle 6-12
Towing recommended by NISSAN 6-12
Vehicle recovery (freeing a stuck vehicle) 6-14

HAZARD WARNING FLASHER SWITCH

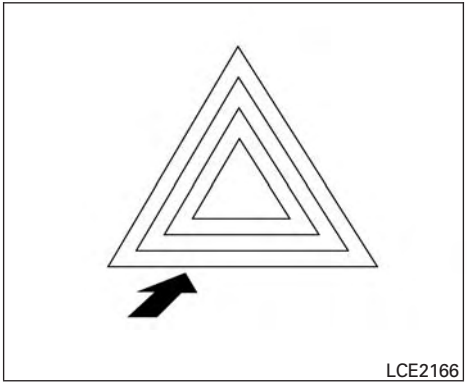

Push the switch on to warn other drivers when you must stop or park under emergency conditions. All turn signal lights flash.

⚠ WARNING

- **If stopping for an emergency, be sure to move the vehicle well off the road.**
- **Do not use the hazard warning flashers while moving on the highway unless unusual circumstances force you to drive so slowly that your vehicle might become a hazard to other traffic.**
- **Turn signals do not work when the hazard warning flasher lights are on.**

The flashers will operate with the ignition switch placed in any position.

Some jurisdictions may prohibit the use of the hazard warning flasher switch while driving.

EMERGENCY ENGINE SHUT OFF

To shut off the engine in an emergency situation while driving, perform the following procedure:

– Rapidly push the push-button ignition switch three consecutive times in less than 1.5 seconds, or

– Push and hold the push-button ignition switch for more than 2 seconds.

TIRE PRESSURE MONITORING SYSTEM (TPMS)

This vehicle is equipped with TPMS. It monitors tire pressure of all tires except the spare. When the low tire pressure warning light is lit, and the "Tire Pressure Low - Add Air" warning appears in the vehicle information display, one or more of your tires is significantly under-inflated. If equipped, the system also displays pressure of all tires (except the spare tire) on the display screen by sending a signal from a sensor that is installed in each wheel. If the vehicle is being driven with low tire pressure, the TPMS will activate and warn you of it by the low tire pressure warning light. This system will activate only when the vehicle is driven at speeds above 16 mph (25 km/h). For additional information, refer to "Warning lights, indicator lights and audible reminders" in "Instruments and controls" section and the "Tire Pressure Monitoring System (TPMS)" in the "Starting and driving" sections of this manual.

⚠ WARNING

- **Radio waves could adversely affect electric medical equipment. Those who use a pacemaker should contact the electric medical equipment manufacturer for the possible influences before use.**
- **If the low tire pressure warning light illuminates while driving, avoid sudden steering maneuvers or abrupt braking, reduce vehicle speed, pull off the road to a safe location and stop the vehicle as soon as possible. Driving with under-inflated tires may permanently damage the tires and increase the likelihood of tire failure. Serious vehicle damage could occur and may lead to an accident and could result in serious personal injury. Check the tire pressure for all four tires. Adjust the tire pressure to the recommended COLD tire pressure shown on the Tire and Loading Information label to turn the low tire pressure warning light OFF. If you have a flat tire, replace it with a spare tire as soon as possible.**
- **Since the spare tire is not equipped with the TPMS, when a spare tire is mounted or a wheel is replaced, tire pressure will not be indicated, the TPMS will not function and the low tire pressure warning light will flash for approximately 1 minute. The light will remain on after 1 minute. Have your tires replaced and/or TPMS system reset as soon as possible. It is recommended that you visit a NISSAN dealer for these services.**
- **Replacing tires with those not originally specified by NISSAN could affect the proper operation of the TPMS.**
- **Do not inject any tire liquid or aerosol tire sealant into the tires, as this may cause a malfunction of the tire pressure sensors.**

CHANGING A FLAT TIRE

If you have a flat tire, follow the instructions below:

Stopping the vehicle

1. Safely move the vehicle off the road and away from traffic.
2. Turn on the hazard warning flashers.

3. Park on a level surface and apply the parking brake. Move the shift lever to P (Park).
4. Turn off the engine.
5. Raise the hood to warn other traffic and to signal professional road assistance personnel that you need assistance.
6. Have all passengers get out of the vehicle and stand in a safe place, away from traffic and clear of the vehicle.

⚠ WARNING

- **Make sure the parking brake is securely applied and the CVT is shifted into P (Park).**
- **Never change tires when the vehicle is on a slope, ice or slippery areas. This is hazardous.**
- **Never change tires if oncoming traffic is close to your vehicle. Wait for professional road assistance.**

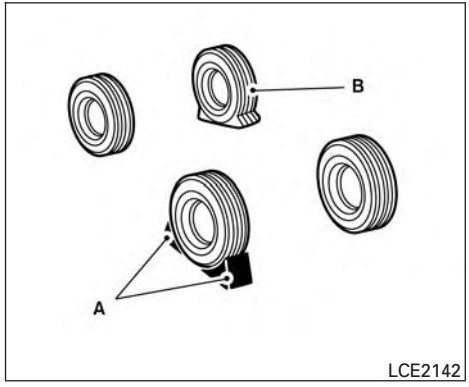

LCE2142

A. Blocks

B. Flat tire

Blocking wheels

Place suitable blocks at both the front and back of the wheel diagonally opposite the flat tire to prevent the vehicle from moving when it is jacked up.

⚠ WARNING

Be sure to block the wheel as the vehicle may move and result in personal injury.

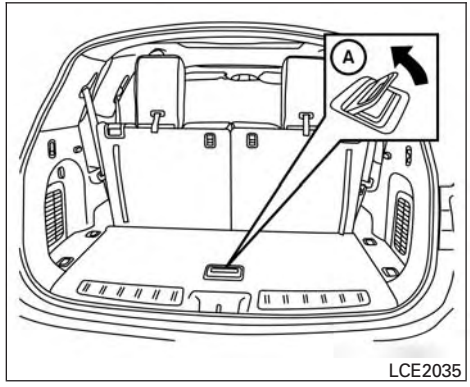

LCE2035

Getting the spare tire and tools

1. Open the liftgate and lift the luggage board in the cargo area using the handle Ⓐ.

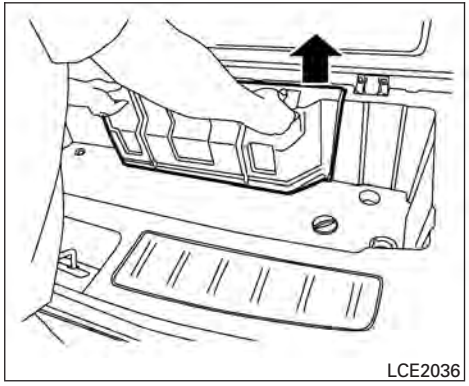

2. Remove the jack and tool kit cover by lifting up using the handles.

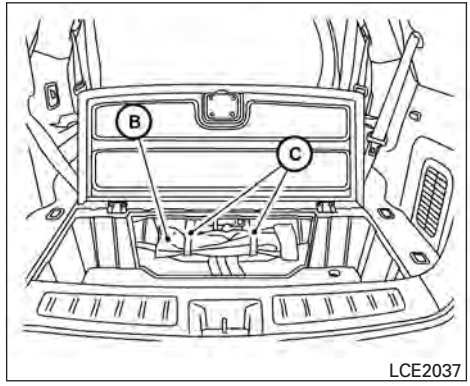

3. Remove the tool kit Ⓑ.
   - To release the tool kit, release the hook and eye straps Ⓒ.

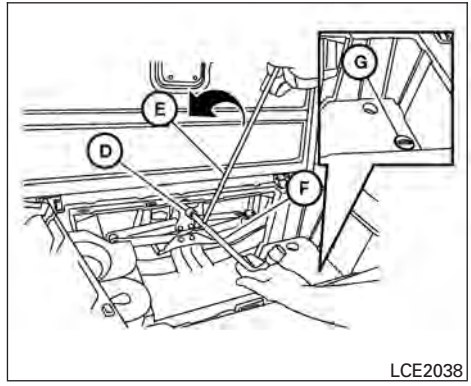

4. Remove the jack.
   - The jack is secured by a fastener Ⓓ. To release the fastener, assemble the extension Ⓔ into the wheel nut wrench Ⓕ as illustrated and rotate counterclockwise to release.
   - Insert the flat end of the wheel nut wrench Ⓕ into the slot of the fastener Ⓓ, and rotate counterclockwise to release the jack.
5. The lowering mechanism for the spare tire is located on the passenger side of the cargo area. Remove the cover Ⓖ to access the spare tire winch.

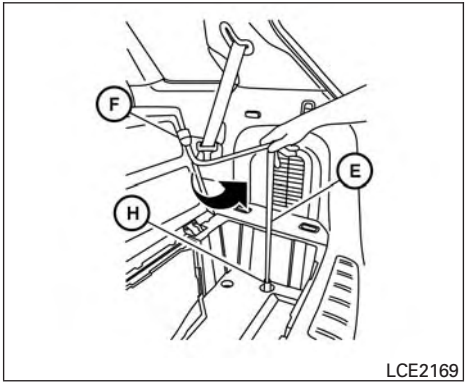

6. Insert the spare tire winch socket Ⓗ to the lowering mechanism nut.
7. To lower the spare tire, insert the wheel nut wrench Ⓕ to the extension Ⓔ and insert the T-shaped end to the winch socket Ⓗ and rotate counterclockwise.
8. After removing the spare tire from under the vehicle, be sure to crank the cable up to stow it.

NOTE:

Fully lower the spare tire below the vehicle before attempting to remove the winch from the spare tire.

9. Securely store the flat tire, tools and jacking equipment in the vehicle.

⚠ CAUTION

- **Make sure safety cable is coiled above spare tire when reinstalling spare tire/wheel.**
- **When re-installing the spare tire under the vehicle after use, be sure to secure it with the tire stem facing down toward the ground. If the spare tire is improperly secured with the tire stem facing up towards the bottom of the vehicle, there is an increased risk of separating from the vehicle in the event of a crash which may pose a hazard in traffic or risk of injury to others.**

Jacking up vehicle and removing the damaged tire

⚠ WARNING

- **Never get under the vehicle while it is supported only by the jack. If it is necessary to work under the vehicle, support it with safety stands.**
- **Use only the jack provided with your vehicle to lift the vehicle. Do not use the jack provided with your vehicle on other vehicles. The jack is designed for lifting only your vehicle during a tire change.**
- **Use the correct jack-up points. Never use any other part of the vehicle for jack support.**
- **Never jack up the vehicle more than necessary.**
- **Never use blocks on or under the jack.**
- **Do not start or run the engine while vehicle is on the jack. It may cause the vehicle to move. This is especially true for vehicles with limited slip differentials.**
- **Do not allow passengers to stay in the vehicle while it is on the jack.**
- **Never run the engine with a wheel(s) off the ground. It may cause the vehicle to move.**

Always refer to the illustration for the correct placement and jack-up points for your specific vehicle model and jack type.

Carefully read the caution label attached to the jack body and the following instructions.

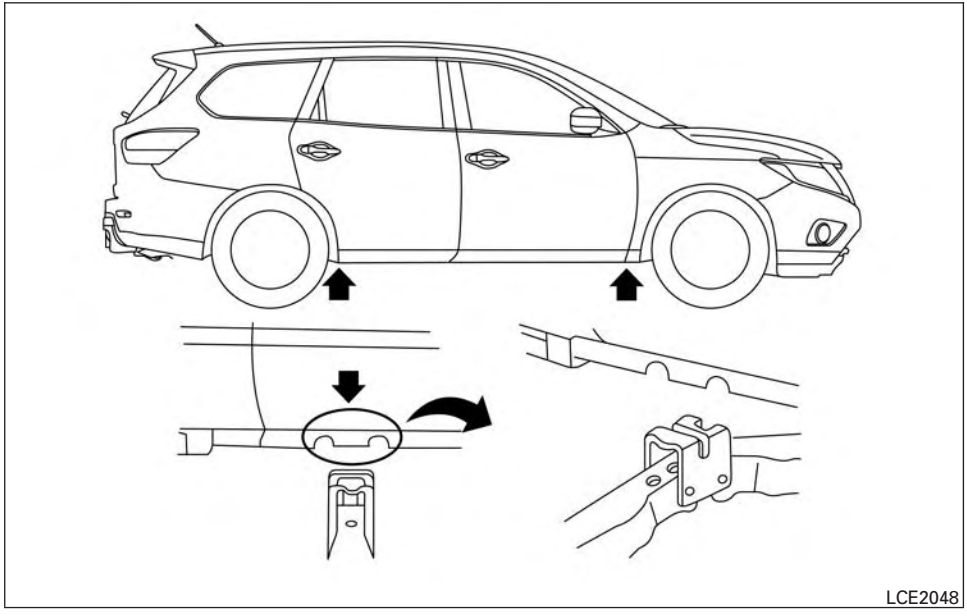

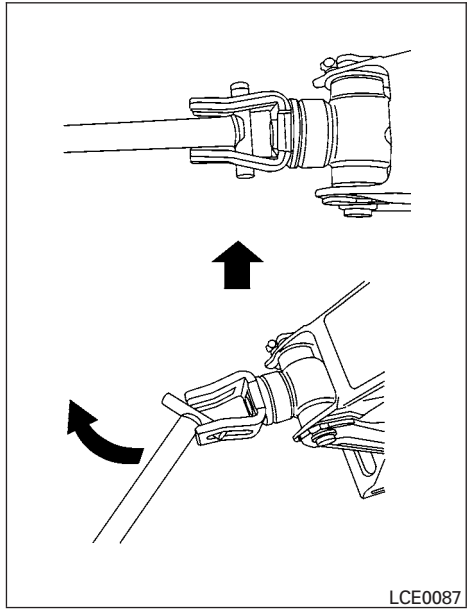

1. Loosen each wheel nut one or two turns by turning counterclockwise with the wheel nut wrench. **Do not remove the wheel nuts until the tire is off the ground.**
2. Place the jack directly under the jack-up point as illustrated so the top of the jack contacts the vehicle at the jack-up point. The jack-up points are indicated by stamped arrows on the side of the frame.

The jack should be used on firm and level ground.

3. Install the assembled jack rod into the jack as shown.
4. To lift the vehicle, securely hold the jack lever and rod. Carefully raise the vehicle until the tire clears the ground.

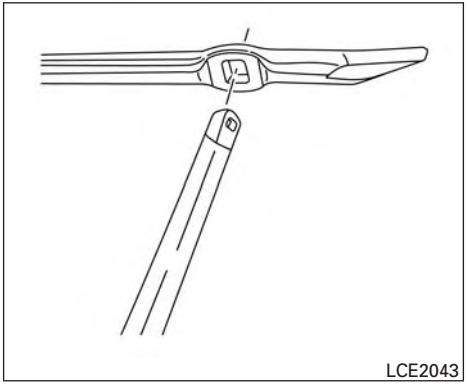

NOTE:

If the lug nut wrench/jack handle contacts the ground while raising the vehicle, disassemble the lug nut wrench from the jack extension rod, rotate it 90 degrees and reassemble.

5. Remove the wheel nuts and then remove the tire.

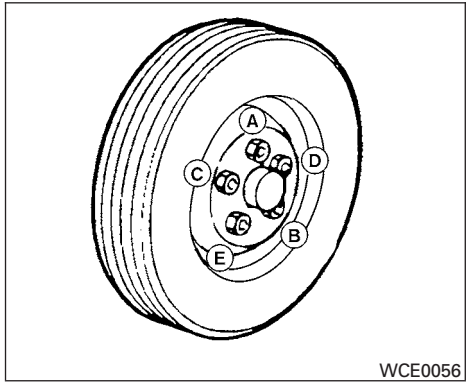

Installing the spare tire

The spare tire is designed for emergency use. For additional information, refer to "Wheels and tires" in the "Do-it-yourself" section of this manual.

1. Clean any mud or dirt from the surface between the wheel and hub.
2. Carefully put the spare tire on and tighten the wheel nuts finger tight.
3. With the wheel nut wrench, tighten wheel nuts alternately and evenly in the sequence illustrated (Ⓐ, Ⓑ, Ⓒ, Ⓓ, Ⓔ) until they are tight.
4. Lower the vehicle slowly until the tire touches the ground. Then, with the wheel nut wrench, tighten the wheel nuts securely in the sequence illustrated (Ⓐ, Ⓑ, Ⓒ, Ⓓ, Ⓔ). Lower the vehicle completely.

⚠ WARNING

- **Incorrect wheel nuts or improperly tightened wheel nuts can cause the wheel to become loose or come off. This could cause an accident.**
- **Do not use oil or grease on the wheel studs or nuts. This could cause the nuts to become loose.**
- **Retighten the wheel nuts when the vehicle has been driven for 621 miles (1,000 km) (also in cases of a flat tire, etc.).**

As soon as possible, tighten the wheel nuts to the specified torque with a torque wrench.

Wheel nut tightening torque:

83 ft-lb (113 N·m)

The wheel nuts must be kept tightened to specification at all times. It is recommended that wheel nuts be tightened to specifications at each lubrication interval.

Adjust tire pressure to the COLD pressure.

COLD pressure: After vehicle has been parked for 3 hours or more or driven less than 1 mile (1.6 km).

COLD tire pressures are shown on the tire and loading information label affixed to the driver side center pillar.

5. Securely store the flat tire, tools and jacking equipment in the vehicle.
6. Close the liftgate.

⚠ WARNING

- **Always make sure that the spare tire and jacking equipment are properly secured after use. Such items can become dangerous projectiles in an accident or sudden stop.**
- **The spare tire is designed for emergency use. For additional information, refer to "Wheels and tires" in the "Do-it-yourself" section of this manual.**

To start your engine with a booster battery, the instructions and precautions below must be followed.

⚠ WARNING

- **If done incorrectly, jump starting can lead to a battery explosion, resulting in severe injury or death. It could also damage your vehicle.**
- **Explosive hydrogen gas is always present in the vicinity of the battery. Keep all sparks and flames away from the battery.**
- **Do not allow battery fluid to come into contact with eyes, skin, clothing or painted surfaces. Battery fluid is a corrosive sulfuric acid solution which can cause severe burns. If the fluid should come into contact with anything, immediately flush the contacted area with water.**
- **Keep battery out of the reach of children.**
- **The booster battery must be rated at 12 volts. Use of an improperly rated battery can damage your vehicle.**
- **Whenever working on or near a battery, always wear suitable eye protectors (for example, goggles or industrial safety spectacles) and remove rings, metal bands, or any other jewelry. Do not lean over the battery when jump starting.**
- **Do not attempt to jump start a frozen battery. It could explode and cause serious injury.**
- **Your vehicle has an automatic engine cooling fan. It could come on at any time. Keep hands and other objects away from it.**

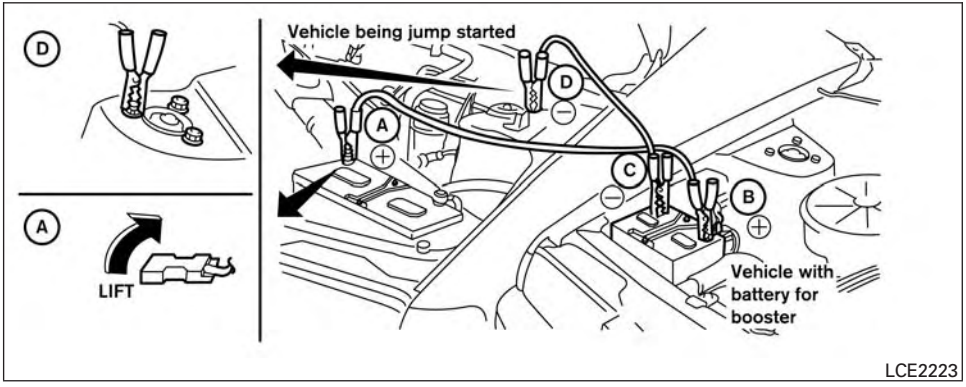

⚠ WARNING

Always follow the instructions below. Failure to do so could result in damage to the charging system and cause personal injury.

1. If the booster battery is in another vehicle, position the two vehicles to bring their batteries near each other.

   Do not allow the two vehicles to touch.

2. Apply the parking brake. Move the shift lever to P (Park). Switch off all unnecessary electrical systems (lights, heater, air conditioner, etc.).
3. Ensure the vent caps are level and tight.
4. Connect the jumper cables in the sequence illustrated (Ⓐ, Ⓑ, Ⓒ, Ⓓ).

⚠ CAUTION

- **Always connect positive (+) to positive (+) and negative (−) to body ground (for example, strut mounting bolt, engine lift bracket, etc.) — not to the battery.**
- **Make sure the jumper cables do not touch moving parts in the engine compartment and that the cable clamps do not contact any other metal.**

5. Start the engine of the booster vehicle and let it run for a few minutes.
6. Keep the engine speed of the booster vehicle at about 2,000 rpm and start the engine of the vehicle being jump started.

⚠ CAUTION

Do not keep the starter motor engaged for more than 10 seconds. If the engine does not start right away, place the ignition switch in the OFF position and wait 3 to 4 seconds before trying again.

7. After starting the engine, carefully disconnect the negative cable and then the positive cable.

PUSH STARTING

⚠ CAUTION

- **CVT models cannot be push-started or tow-started. Attempting to do so may cause transmission damage.**
- **Do not push start this vehicle. The three-way catalyst may be damaged.**

IF YOUR VEHICLE OVERHEATS

⚠ WARNING

- **Do not continue to drive if your vehicle overheats. Doing so could cause engine damage or a vehicle fire.**
- **To avoid the danger of being scalded, never remove the radiator or coolant reservoir cap while the engine is still hot. When the radiator or coolant reservoir cap is removed, pressurized hot water will spurt out, possibly causing serious injury.**
- **Do not open the hood if steam is coming out.**

If your vehicle is overheating (indicated by an extremely high temperature gauge reading and the illumination of the engine oil pressure/engine coolant temperature high indicator light), or if you feel a lack of engine power, detect abnormal noise, etc. take the following steps:

1. Move the vehicle safely off the road, apply the parking brake and move the shift lever to P (Park).

   Do not stop the engine.

2. Turn off the air conditioner. Open all the windows, move the heater or air conditioner temperature control to maximum hot and fan control to high speed.
3. Get out of the vehicle. Look and listen for steam or coolant escaping from the radiator before opening the hood. If steam or coolant is escaping, turn off the engine. Do not open the hood further until no steam or coolant can be seen.
4. Open the engine hood.

⚠ WARNING

If steam or water is coming from the engine, stand clear to prevent getting burned.

5. Visually check drive belts for damage or looseness. Also check if the cooling fan is running. The radiator hoses and radiator should not leak water. If coolant is leaking, the water pump belt is missing or loose, or the cooling fan does not run, stop the engine.

⚠ WARNING

Be careful not to allow your hands, hair, jewelry or clothing to come into contact with, or get caught in, engine belts or the engine cooling fan. The engine cooling fan can start at any time.

6. After the engine cools down, check the coolant level in the engine coolant reservoir tank with the engine running. Add coolant to the engine coolant reservoir tank if necessary. Have your vehicle repaired. It is recommended that you visit a NISSAN dealer for this service.

When towing your vehicle, all jurisdictional and local regulations for towing must be followed. Incorrect towing equipment could damage your vehicle. Towing instructions are available from a NISSAN dealer. Local service operators are generally familiar with the applicable laws and procedures for towing. To assure proper towing and to prevent accidental damage to your vehicle, NISSAN recommends having a service operator tow your vehicle. It is advisable to have the service operator carefully read the following precautions:

⚠ WARNING

- **Never ride in a vehicle that is being towed.**
- **Never get under your vehicle after it has been lifted by a tow truck.**

⚠ CAUTION

- **When towing, make sure that the transmission, axles, steering system and powertrain are in working condition. If any of these conditions apply, dollies or a flatbed tow truck must be used.**
- **Always attach safety chains before towing.**

For additional information about towing your vehicle behind a Recreational Vehicle (RV), refer to “Flat towing for 4–Wheel drive vehicle” or “Flat towing for front wheel drive vehicle” in the “Technical and consumer information” section of this manual.

TOWING RECOMMENDED BY NISSAN

NISSAN recommends towing your vehicle based upon the type of drivetrain. Please refer to the diagrams in this section to ensure that your vehicle is properly towed.

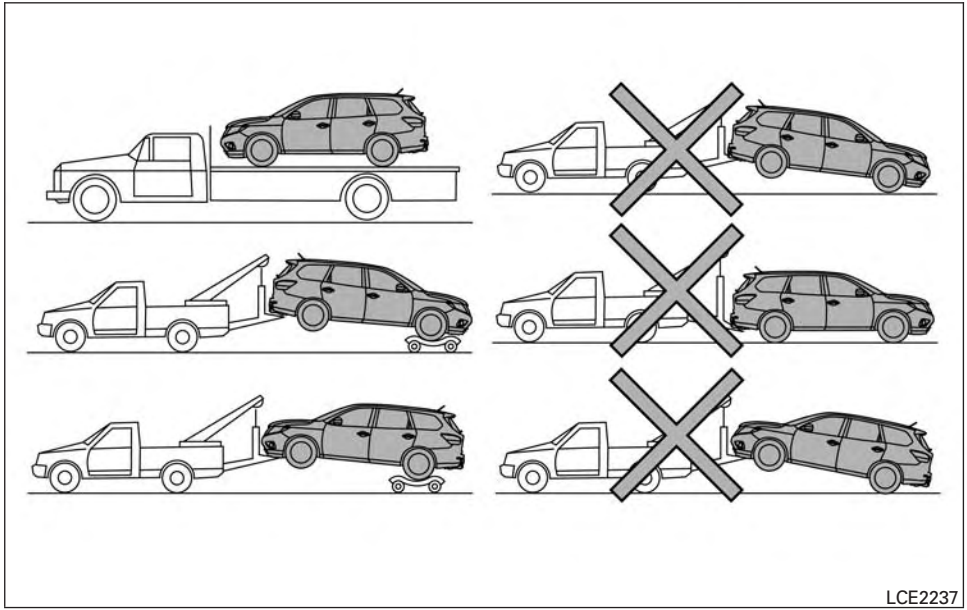

Four-wheel drive models

NISSAN recommends that towing dollies be used when towing your vehicle or place the vehicle on a flatbed truck as illustrated.

⚠ CAUTION

Never tow 4WD models with any of the wheels on the ground as this may cause serious and expensive damage to the powertrain.

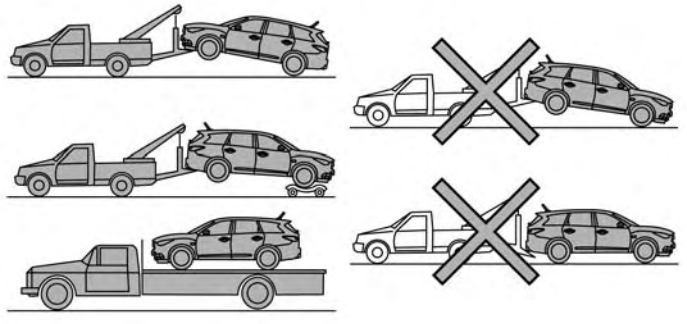

LCE2041

Front-Wheel Drive (FWD) models

NISSAN recommends that your vehicle be towed with the driving wheels (front) off the ground or place the vehicle on a flatbed truck as illustrated.

⚠ WARNING

- **Never tow your vehicle with the front wheels on the ground or four wheels on the ground (forward or backward), as this may cause serious and expensive damage to the transmission. If it is necessary to tow the vehicle with the rear wheels raised always use towing dollies under the front wheels.**
- **When towing with the rear wheels on the ground or on towing dollies, place the ignition switch in the ACC or ON position, and secure the steering wheel in the straight-ahead position with a rope or similar device.**

VEHICLE RECOVERY (freeing a stuck vehicle)

⚠ WARNING

To avoid vehicle damage, serious personal injury or death when recovering a stuck vehicle:

- **Contact a professional towing service to recover the vehicle if you have any questions regarding the recovery procedure.**
- **Tow chains or cables must be attached only to main structural members of the vehicle.**
- **Do not use the vehicle tie-downs to tow or free a stuck vehicle.**
- **Only use devices specifically designed for vehicle recovery and follow the manufacturer's instructions.**
- **Always pull the recovery device straight out from the front of the vehicle. Never pull at an angle.**
- **Route recovery devices so they do not touch any part of the vehicle except the attachment point.**

If your vehicle is stuck in sand, snow, mud, etc., use a tow strap or other device designed specifically for vehicle recovery. Always follow the manufacturer's instructions for the recovery device.

Rocking a stuck vehicle

⚠ WARNING

- **Stand clear of a stuck vehicle.**
- **Do not spin your tires at high speed. This could cause them to explode and result in serious injury. Parts of your vehicle could also overheat and be damaged.**

If your vehicle is stuck in sand, snow, mud, etc., use the following procedure:

1. Turn off the Vehicle Dynamic Control (VDC) system.
2. Make sure the area in front and behind the vehicle is clear of obstructions.
3. Turn the steering wheel right and left to clear an area around the front tires.
4. Slowly rock the vehicle forward and backward.
   - Shift back and forth between R (Reverse) and D (Drive).
   - Apply the accelerator as little as possible to maintain the rocking motion.
   - Release the accelerator pedal before shifting between R (Reverse) and D (Drive).
   - Do not spin the tires above 35 mph (55 km/h).
5. If the vehicle cannot be freed after a few tries, contact a professional towing service to remove the vehicle.

MEMO

7 Appearance and care

Cleaning exterior 7-2
Washing 7-2
Waxing 7-2
Removing spots 7-3
Underbody 7-3
Glass 7-3
Aluminum alloy wheels 7-3
Chrome parts 7-3
Tire dressings 7-3
Cleaning interior 7-4
Air fresheners 7-4
Power Moonroof (if so equipped) 7-4
Floor mats 7-5
Seat belts 7-6
Cleaning the seat tracks 7-6
Corrosion protection 7-7
Most common factors contributing to vehicle corrosion 7-7
Environmental factors influence the rate of corrosion 7-7
Protect your vehicle from corrosion 7-7

In order to maintain the appearance of your vehicle, it is important to take proper care of it.

To protect the paint surfaces, please wash your vehicle as soon as you can:

- After a rainfall to prevent possible damage from acid rain.
- After driving on coastal roads.
- When contaminants such as soot, bird droppings, tree sap, metal particles or bugs get on the paint surface.
- When dust or mud builds up on the surface.

Whenever possible, store or park your vehicle inside a garage or in a covered area.

When it is necessary to park outside, park in a shady area or protect the vehicle with a body cover.

Be careful not to scratch the paint surface when putting on or removing the body cover.

WASHING

Wash dirt off with a wet sponge and plenty of water. Clean the vehicle thoroughly using a mild soap, a special vehicle soap or general purpose dishwashing liquid mixed with clean, lukewarm (never hot) water.

⚠ CAUTION

- **Do not use car washes that use acid in the detergent. Some car washes, especially brushless ones, use some acid for cleaning. The acid may react with some plastic vehicle components, causing them to crack. This could affect their appearance, and also could cause them not to function properly. Always check with your car wash to confirm that acid is not used.**
- **Do not wash the vehicle with strong household soap, strong chemical detergents, gasoline or solvents.**
- **Do not wash the vehicle in direct sunlight or while the vehicle body is hot, as the surface may become water-spotted.**
- **Avoid using tight-napped or rough cloths, such as washing mitts. Care must be taken when removing caked-on dirt or other foreign substances so the paint surface is not scratched or damaged.**

Rinse the vehicle thoroughly with plenty of clean water.

Inside edges, seams and folds on the doors, hatches and hood are particularly vulnerable to the effects of road salt. Therefore, these areas must be cleaned regularly. Take care that the drain holes in the lower edge of the door are open. Spray water under the body and in the wheel wells to loosen the dirt and wash away road salt.

A damp chamois can be used to dry the vehicle to avoid water spots.

WAXING

Regular waxing protects the paint surface and helps retain new vehicle appearance. Polishing is recommended to remove built-up wax residue and to avoid a weathered appearance before re-applying wax.

A NISSAN dealer can assist you in choosing the proper product.

- Wax your vehicle only after a thorough washing. Follow the instructions supplied with the wax.
- Do not use a wax containing any abrasives, cutting compounds or cleaners that may damage the vehicle finish.

Machine compounding or aggressive polishing on a base coat/clear coat paint finish may dull the finish or leave swirl marks.

REMOVING SPOTS

Remove tar and oil spots, industrial dust, insects, and tree sap as quickly as possible from the surface of the paint to avoid lasting damage or staining. Special cleaning products are available at a NISSAN dealer or any automotive accessory store. It is recommended that you visit a NISSAN dealer for these products.

UNDERBODY

In areas where road salt is used in winter, it is necessary to clean the underbody regularly in order to prevent dirt and salt from building up and causing the acceleration of corrosion on the underbody and suspension. Before the winter period and again in the spring, the underseal must be checked and, if necessary, re-treated.

GLASS

Use glass cleaner to remove smoke and dust film from the glass surfaces. It is normal for glass to become coated with a film after the vehicle is parked in the hot sun. Glass cleaner and a soft cloth will easily remove this film.

⚠ CAUTION

When cleaning the inside of the windows, do not use sharp-edged tools, abrasive cleaners or chlorine-based disinfectant cleaners. They could damage the electrical conductors, radio antenna elements or rear window defroster elements.

ALUMINUM ALLOY WHEELS

Wash the wheels regularly with a sponge dampened in a mild soap solution, especially during winter months in areas where road salt is used. If not removed, road salt can discolor the wheels.

⚠ CAUTION

Follow the directions below to avoid staining or discoloring the wheels:

- **Do not use a cleaner that uses strong acid or alkali contents to clean the wheels.**
- **Do not apply wheel cleaners to the wheels when they are hot. The wheel temperature should be the same as ambient temperature.**
- **Rinse the wheel to completely remove the cleaner within 15 minutes after the cleaner is applied.**

CHROME PARTS

Clean all chrome parts regularly with a non-abrasive chrome polish to maintain the finish.

TIRE DRESSINGS

NISSAN does not recommend the use of tire dressings. Tire manufacturers apply a coating to the tires to help reduce discoloration of the rubber. If a tire dressing is applied to the tires, it may react with the coating and form a compound. This compound may come off the tire while driving and stain the vehicle paint.

If you choose to use a tire dressing, take the following precautions:

- Use a water-based tire dressing. The coating on the tire dissolves more easily than with an oil-based tire dressing.
- Apply a light coat of tire dressing to help prevent it from entering the tire tread/grooves (where it would be difficult to remove).
- Wipe off excess tire dressing using a dry towel. Make sure the tire dressing is completely removed from the tire tread/grooves.
- Allow the tire dressing to dry as recommended by the tire dressing manufacturer.

Occasionally remove loose dust from the interior trim, plastic parts and seats using a vacuum cleaner or soft bristled brush. Wipe the vinyl and leather surfaces with a clean, soft cloth dampened in mild soap solution, then wipe clean with a dry, soft cloth.

Regular care and cleaning is required in order to maintain the appearance of the leather.

Before using any fabric protector, read the manufacturer's recommendations. Some fabric protectors contain chemicals that may stain or bleach the seat material.

Use a cloth dampened only with water to clean the meter and gauge lens.

⚠ WARNING

Do not use water or acidic cleaners (hot steam cleaners) on the seat. This can damage the seat or occupant classification sensor. This can also affect the operation of the air bag system and result in serious personal injury.

⚠ CAUTION

- **Never use benzine, thinner or any similar material.**
- **Small dirt particles can be abrasive and damaging to leather surfaces and should be removed promptly. Do not use saddle soap, car waxes, polishes, oils, cleaning fluids, solvents, detergents or ammonia-based cleaners as they may damage the leather's natural finish.**
- **Never use fabric protectors unless recommended by the manufacturer.**
- **Do not use glass or plastic cleaner on meter or gauge lens covers. It may damage the lens cover.**

AIR FRESHENERS

Most air fresheners use a solvent that could affect the vehicle interior. If you use an air freshener, take the following precautions:

- Hanging-type air fresheners can cause permanent discoloration when they contact vehicle interior surfaces. Place the air freshener in a location that allows it to hang free and not contact an interior surface.
- Liquid-type air fresheners typically clip on the vents. These products can cause immediate damage and discoloration when spilled on interior surfaces.

Carefully read and follow the manufacturer's instructions before using the air fresheners.

POWER MOONROOF (if so equipped)

The sunshade is made from a suede material.

⚠ CAUTION

To help prevent damaging the moonroof while cleaning:

- **Do not rub the material with a cloth. Doing so can damage the surface of the material or cause a stain to spread.**
- **Never use benzine, thinner or any similar chemical to clean the suede. This may discolor the moonroof and damage the surface.**
- **Clean water based stains by patting the surface with a clean soft cloth dampened in warm water. Press a clean dry cloth onto the surface to remove as much dampness as possible and then let air dry.**

- **Clean oil based stains by patting the surface with a clean soft cloth dampened in warm water. Press a clean dry cloth onto the surface to remove as much dampness as possible and then let air dry.**

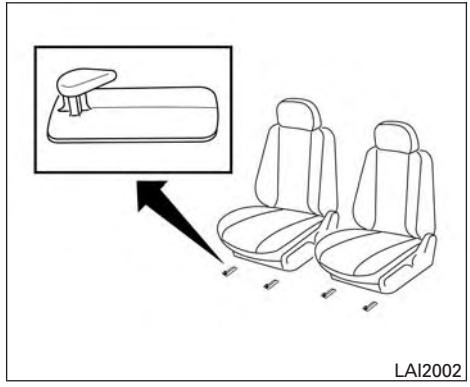

FLOOR MATS

⚠ WARNING

To avoid potential pedal interference that may result in a collision, injury or death:

- **NEVER place a floor mat on top of another floor mat in the driver front position or install them upside down or backwards.**
- **Use only Genuine NISSAN floor mats, or equivalent floor mats, that are specifically designed for use in your vehicle model and model year.**
- **Properly position the mats in the floorwell using the floor mat positioning hook. For additional information, refer to "Floor mat installation" in this section.**
- **Make sure the floor mat does not interfere with pedal operation.**
- **Periodically check the floor mats to make sure they are properly installed.**
- **After cleaning the vehicle interior, check the floor mats to make sure they are properly installed.**

The use of Genuine NISSAN floor mats can extend the life of your vehicle carpet and make it easier to clean the interior. Mats should be maintained with regular cleaning and replaced if they become excessively worn.

Floor mat installation

Your vehicle is equipped with floor mat positioning hook(s). The number and shape of the floor mat positioning hooks for each seating position varies depending on the vehicle.

When installing Genuine NISSAN floor mats, follow the installation instructions provided with the mat and the following:

1. Position the floor mat in the floorwell so that the floor mat grommet holes are aligned with the hook(s).
2. Secure the grommet holes into the hook(s) and ensure that the floor mat is properly positioned.
3. Make sure the floor mat does not interfere with pedal operation. With the ignition in the OFF position, the selector lever in the P (Park) position (Automatic Transmission models) or the shift lever in the N (Neutral) position (Manual Transmission models) fully apply and release all pedals. The floor mat must not interfere with pedal operation or prevent the pedal from returning to its normal position.

It is recommended that you visit a NISSAN dealer for details about installing the floor mats in your vehicle.

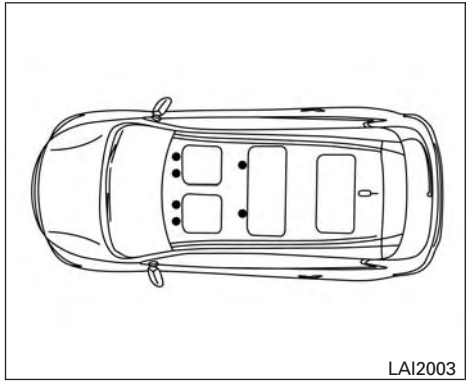

Positioning hooks

The illustration shows the location of the floor mat positioning hooks.

SEAT BELTS

The seat belts can be cleaned by wiping them with a sponge dampened in a mild soap solution. Allow the belts to dry completely in the shade before using them. For additional information, refer to “Seat belt maintenance” in the “Safety–Seats, seat belts and supplemental restraint system” section of this manual.

⚠ WARNING

Do not allow wet seat belts to roll up in the retractor. NEVER use bleach, dye or chemical solvents to clean the seat belts, since these materials may severely weaken the seat belt webbing.

CLEANING THE SEAT TRACKS

⚠ CAUTION

Periodically clean the seat tracks to prevent reduction of ability to move the seats.

Clean periodically with a high-powered vacuum cleaner. Dirt and debris may reduce the ability to adjust the seat. A wet cleansing agent may be used if necessary.

MOST COMMON FACTORS CONTRIBUTING TO VEHICLE CORROSION

Most vehicle corrosion is caused by:

- The accumulation of moisture-retaining dirt and debris in body panel sections, cavities, and other areas.
- Damage to paint and other protective coatings caused by gravel and stone chips or minor traffic collisions.

ENVIRONMENTAL FACTORS INFLUENCE THE RATE OF CORROSION

Moisture

Accumulation of sand, dirt and water on the vehicle body underside can accelerate corrosion. Wet floor coverings will not dry completely inside the vehicle and should be removed for drying to avoid floor panel corrosion.

Relative humidity

Corrosion will be accelerated in areas of high relative humidity, especially those areas where the temperatures stay above freezing and where atmospheric pollution exists and road salt is used.

Temperature

High temperatures accelerate the rate of corrosion to those parts which are not well ventilated.

Air pollution

Industrial pollution, the presence of salt in the air in coastal areas, or heavy road salt use accelerates the corrosion process. Road salt also accelerates the disintegration of paint surfaces.

PROTECT YOUR VEHICLE FROM CORROSION

- Wash and wax your vehicle often to keep the vehicle clean.
- Always check for minor damage to the paint and repair it as soon as possible.
- Keep drain holes at the bottom of the doors open to avoid water accumulation.
- Check the underbody for accumulation of sand, dirt or salt. If present, wash with water as soon as possible.

⚠ CAUTION

- **NEVER remove dirt, sand or other debris from the passenger compartment by washing it out with a hose. Remove dirt with a vacuum cleaner or broom.**
- **Never allow water or other liquids to come in contact with electronic components inside the vehicle as this may damage them.**

Chemicals used for road surface de-icing are extremely corrosive. They accelerate corrosion and deterioration of underbody components such as the exhaust system, fuel and brake lines, brake cables, floor pan and fenders.

In winter, the underbody must be cleaned periodically.

For additional protection against rust and corrosion, which may be required in some areas, it is recommended that you visit a NISSAN dealer.

MEMO

8 Do-it-yourself

Maintenance precautions 8-2
Engine compartment check locations 8-3
Engine cooling system 8-4
Checking engine coolant level 8-5
Changing engine coolant 8-5
Engine oil 8-6
Checking engine oil level 8-6
Changing engine oil 8-7
Changing engine oil filter 8-8
Continuously Variable Transmission (CVT) fluid 8-9
Power steering fluid 8-9
Brake fluid 8-10
Windshield-washer fluid 8-11
Windshield-washer fluid reservoir 8-11
Battery 8-11
Jump starting 8-13
Drive belt 8-13
Spark plugs 8-14
Replacing spark plugs 8-14
Air cleaner 8-15
In-cabin microfilter 8-15
Windshield wiper blades 8-16
Cleaning 8-16
Replacing 8-16
Brakes 8-17
Fuses 8-18
Engine compartment 8-18
Passenger compartment 8-19
Battery replacement 8-20
NISSAN Intelligent Key® 8-21
Lights 8-22
Headlights 8-22
Fog lights (if so equipped) 8-22
Exterior and interior lights 8-23
Wheels and tires 8-25
Tire pressure 8-25
Tire labeling 8-28
Types of tires 8-31
Tire chains 8-32
Changing wheels and tires 8-32

MAINTENANCE PRECAUTIONS

When performing any inspection or maintenance work on your vehicle, always take care to prevent serious accidental injury to yourself or damage to the vehicle. The following are general precautions which should be closely observed.

⚠ WARNING

- **Park the vehicle on a level surface, apply the parking brake securely and block the wheels to prevent the vehicle from moving. Move the shift lever to P (Park).**
- **Be sure the ignition switch is in the OFF or LOCK position when performing any parts replacement or repairs.**
- **If you must work with the engine running, keep your hands, clothing, hair and tools away from moving fans, belts and any other moving parts.**
- **It is advisable to secure or remove any loose clothing and remove any jewelry, such as rings, watches, etc. before working on your vehicle.**
- **Always wear eye protection whenever you work on your vehicle.**
- **Your vehicle is equipped with an automatic engine cooling fan. It may come on at any time without warning, even if the ignition switch is in the OFF position and the engine is not running. To avoid injury, always disconnect the negative battery cable before working near the fan.**
- **If you must run the engine in an enclosed space such as a garage, be sure there is proper ventilation for exhaust gases to escape.**
- **Never get under the vehicle while it is supported only by a jack. If it is necessary to work under the vehicle, support it with safety stands.**
- **Keep smoking materials, flame and sparks away from the fuel tank and battery.**
- **Because the fuel lines on gasoline engine models are under high pressure even when the engine is off, it is recommended that you visit a NISSAN dealer for service of the fuel filter or fuel lines.**

⚠ CAUTION

- **Do not work under the hood while the engine is hot. Turn the engine off and wait until it cools down.**
- **Avoid contact with used engine oil and coolant. Improperly disposed engine oil, engine coolant and/or other vehicle fluids can damage the environment. Always conform to local regulations for disposal of vehicle fluid.**
- **Never leave the engine or Continuously Variable Transmission (CVT) related component harnesses disconnected while the ignition switch is in the ON position.**
- **Never connect or disconnect the battery or any transistorized component while the ignition switch is in the ON position.**

This “Do-it-yourself” section gives instructions regarding only those items which are relatively easy for an owner to perform.

A Genuine NISSAN service manual is also available. For additional information, refer to “Owner’s Manual/Service Manual order information” in the “Technical and consumer information” section of this manual.

You should be aware that incomplete or improper servicing may result in operating difficulties or excessive emissions, and could affect warranty coverage. **If in doubt about any servicing, it is recommended that you have it done by a NISSAN dealer.**

ENGINE COMPARTMENT CHECK LOCATIONS

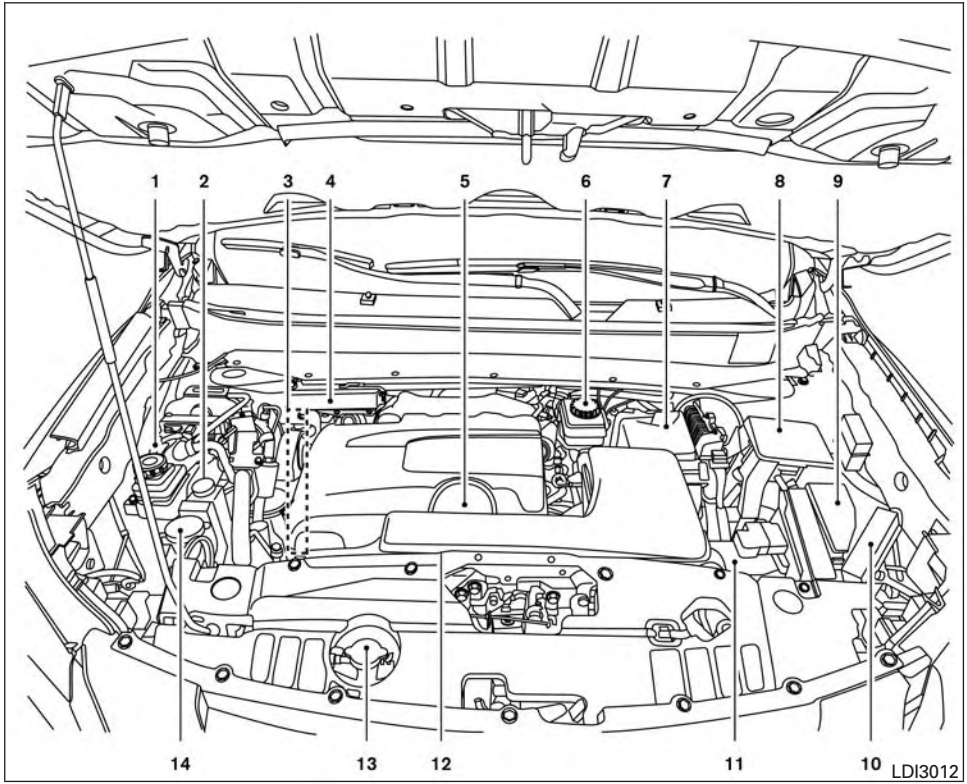

VQ35DD engine

1. Power steering fluid reservoir
2. Engine coolant reservoir
3. Drive belt location
4. Fuse box
5. Engine oil filler cap
6. Brake fluid reservoir
7. Air cleaner
8. Fuse box
9. Fuse/Fusible link box
10. Fuse/Fusible link box
11. Battery
12. Engine oil dipstick
13. Radiator cap
14. Windshield-washer fluid reservoir

NOTE:

Engine cover removed for clarity.

ENGINE COOLING SYSTEM

The engine cooling system is filled at the factory with a pre-diluted mixture of 50% Genuine NISSAN Long Life Antifreeze/Coolant (blue) and 50% water to provide year-round antifreeze and coolant protection. The antifreeze solution contains rust and corrosion inhibitors. Additional engine cooling system additives are not necessary.

⚠ WARNING

- **Never remove the radiator or coolant reservoir cap when the engine is hot. Wait until the engine and radiator cool down. Serious burns could be caused by high pressure fluid escaping from the radiator. For additional information on precautions, refer to "If your vehicle overheats" in the "In case of emergency" section of this manual.**
- **The radiator is equipped with a pressure type radiator cap. To prevent engine damage, use only a Genuine NISSAN radiator cap.**

⚠ CAUTION

- **Never use any cooling system additives such as radiator sealer. Additives may clog the cooling system and cause damage to the engine, transmission and/or cooling system.**
- **When adding or replacing coolant, be sure to use only Genuine NISSAN Long Life Antifreeze/Coolant (blue) or equivalent. Genuine NISSAN Long Life Antifreeze/Coolant (blue) is pre-diluted to provide antifreeze protection to -34° F (-37° C). If additional freeze protection is needed due to weather where you operate your vehicle, add Genuine NISSAN Long Life Antifreeze/Coolant (blue) concentrate following the directions on the container. If an equivalent coolant other than Genuine NISSAN Long Life Antifreeze/Coolant (blue) is used, follow the coolant manufacturer's instructions to maintain minimum antifreeze protection to -34° F (-37° C). The use of other types of coolant solutions other than Genuine NISSAN Long Life Antifreeze/Coolant (blue) or equivalent may damage the engine cooling system.**
- **The life expectancy of the factory-fill coolant is 105,000 miles (168,000 km) or 7 years. Mixing any other type of coolant other than Genuine NISSAN Long Life Antifreeze/Coolant (blue), including Genuine NISSAN Long Life Antifreeze/Coolant (green), or the use of non-distilled water will reduce the life expectancy of the factory-fill coolant. For additional information, refer to the "Maintenance and schedules" section of this manual.**

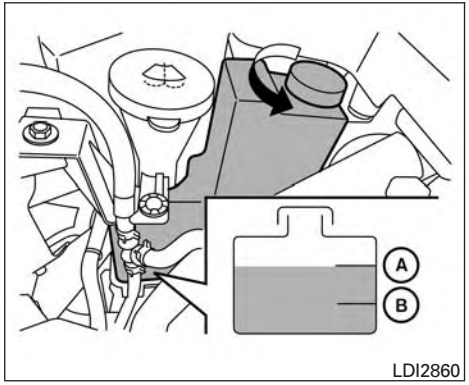

CHECKING ENGINE COOLANT LEVEL

Check the coolant level **in the reservoir when the engine is cold.** If the coolant level is below the MIN level Ⓑ, add coolant to the MAX level Ⓐ. If the reservoir is empty, check the coolant level in the radiator **when the engine is cold.** If there is insufficient coolant in the radiator, fill the radiator with coolant up to the filler opening and also add it to the reservoir up to the MAX level Ⓐ.

This vehicle contains Genuine NISSAN Long Life Antifreeze/Coolant (blue). The life expectancy of the factory-fill coolant is 105,000 miles (168,000 km) or 7 years. Mixing any other type of coolant or the use of non-distilled water will reduce the life expectancy of the factory-fill coolant. For additional information, refer to the "Maintenance and schedules" section of this manual.

If the cooling system frequently requires coolant, have it checked. It is recommended that you visit a NISSAN dealer for this service.

For additional information on the location of the engine coolant reservoir, refer to "Engine compartment check locations" in this section.

CHANGING ENGINE COOLANT

A NISSAN dealer can change the engine coolant. The service procedure can be found in the NISSAN Service Manual.

Improper servicing can result in reduced heater performance and engine overheating.

⚠ WARNING

- **To avoid the danger of being scalded, never change the coolant when the engine is hot.**
- **Never remove the radiator or engine coolant reservoir cap when the engine is hot. Serious burns could be caused by high pressure fluid escaping from the radiator.**
- **Avoid direct skin contact with used coolant. If skin contact is made, wash thoroughly with soap or hand cleaner as soon as possible.**
- **Keep coolant out of the reach of children and pets.**

Engine coolant must be disposed of properly. Check your local regulations.

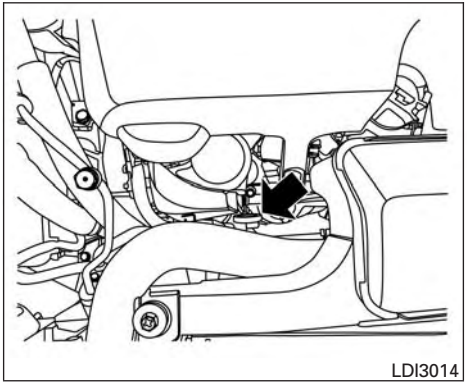
LDI3014

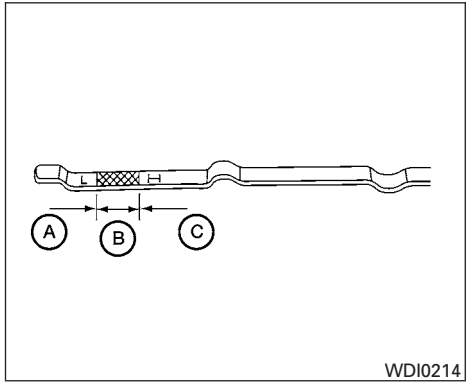

WDI0214

CHECKING ENGINE OIL LEVEL

1. Park the vehicle on a level surface and apply the parking brake.
2. Start the engine and let it idle until it reaches operating temperature.
3. Turn off the engine. **Wait more than 10 minutes for the oil to drain back into the oil pan.**
4. Remove the dipstick and wipe it clean. Reinsert it all the way.
5. Remove the dipstick again and check the oil level. It should be between the H (High) and L (Low) marks Ⓑ. This is the normal operating oil level range. If the oil level is below the L (Low) mark Ⓐ, remove the oil filler cap and pour recommended oil through the opening. **Do not fill oil level above H (High) mark Ⓒ.**
6. Recheck the oil level with the dipstick.

It is normal to add some oil between oil maintenance intervals or during the break-in period, depending on the severity of operating conditions.

⚠ CAUTION

Oil level should be checked regularly. Operating the engine with an insufficient amount of oil can damage the engine, and such damage is not covered by warranty.

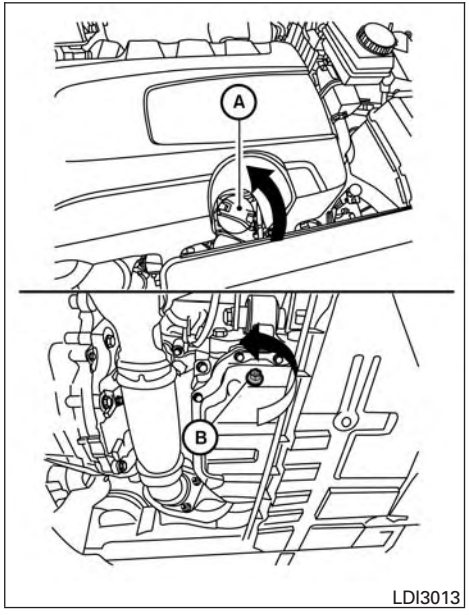

CHANGING ENGINE OIL

1. Park the vehicle on a level surface and apply the parking brake.
2. Start the engine and let it idle until it reaches operating temperature, then turn it off.
3. Remove the oil filler cap Ⓐ by turning it counterclockwise.
4. Place a large drain pan under the drain plug Ⓑ.
5. Remove the drain plug Ⓑ with a wrench by turning it counterclockwise and completely drain the oil.

   If the oil filter is to be changed, remove and replace it at this time. For additional information, refer to "Changing engine oil filter" in this section.

- **Waste oil must be disposed of properly.**
- **Check your local regulations.**

⚠ WARNING

- **Prolonged and repeated contact with used engine oil may cause skin cancer.**
- **Try to avoid direct skin contact with used oil. If skin contact is made, wash thoroughly with soap or hand cleaner as soon as possible.**
- **Keep used engine oil out of reach of children.**

⚠ CAUTION

Be careful not to burn yourself. The engine oil may be hot.

6. Clean and reinstall the drain plug and a new washer. Securely tighten the drain plug with a wrench. Do not use excessive force.

   Drain plug tightening torque:
   34 N·m (25 ft-lb)

7. Refill engine with recommended oil through the oil filler opening, then install the oil filler cap securely.

   For additional information on drain and refill capacity, refer to "Recommended fluids/lubricants and capacities" in the "Technical and consumer information" section of this manual.

   The drain and refill capacity depends on the oil temperature and drain time. Use these specifications for reference only. Always use the dipstick to determine when the proper amount of oil is in the engine.

8. Start the engine. Check for leakage around the drain plug and oil filter. Correct as required.
9. Turn the engine off and wait more than 10 minutes. Check the oil level with the dipstick. Add engine oil if necessary.

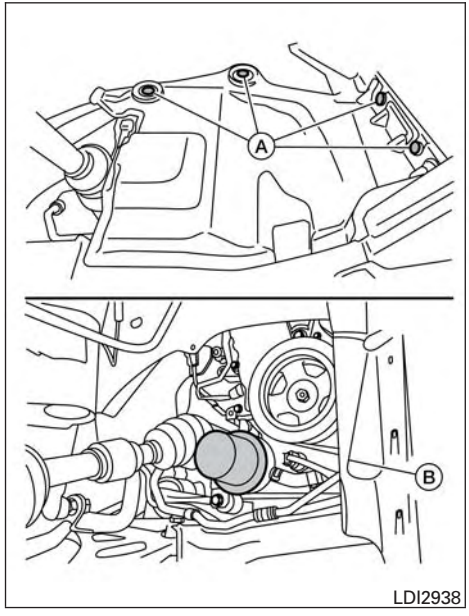

CHANGING ENGINE OIL FILTER

1. Park the vehicle on a level surface and apply the parking brake.
2. Turn the engine off.
3. Place a large drain pan under the oil filter Ⓑ.
4. Remove pins Ⓐ from the right engine protector located inside right wheel well, remove protector. Remove oil filter Ⓑ with an oil filter wrench by turning it counterclockwise. Then remove the oil filter by turning it by hand.

⚠ CAUTION

Be careful not to burn yourself. The engine oil may be hot.

5. Wipe the engine oil filter sealing surface with a clean rag.

⚠ CAUTION

- **Be sure to remove any old gasket material remaining on the sealing surface of the engine. Failure to do so could lead to an oil leak and engine damage.**
- **The dipstick must be inserted in place to prevent oil spillage from the dipstick hole when filling the engine with oil.**

6. Coat the gasket on the new filter with clean engine oil.
7. Screw on the oil filter until a slight resistance is felt, then tighten an additional 2/3 turn.

8. Start the engine and check for leakage around the oil filter. Correct as required.
9. Turn the engine off and wait more than 10 minutes. Check the oil level. Add engine oil if necessary.

CONTINUOUSLY VARIABLE TRANSMISSION (CVT) FLUID

⚠ CAUTION

- **NISSAN recommends using Genuine NISSAN CVT Fluid NS-3 (or equivalent) ONLY in NISSAN CVTs. Do not mix with other fluids.**
- **Do not use Automatic Transmission Fluid (ATF) or Manual transmission fluid in a NISSAN CVT, as it may damage the CVT. Damage caused by the use of fluids other than as recommended is not covered under NISSAN's New Vehicle Limited Warranty.**
- **Using fluids that are not equivalent to Genuine NISSAN CVT Fluid NS-3 may also damage the CVT. Damage caused by the use of fluids other than as recommended is not covered under NISSAN's New Vehicle Limited Warranty.**

When checking or replacement of CVT fluid is required, it is recommended that you visit a NISSAN dealer for this service.

POWER STEERING FLUID

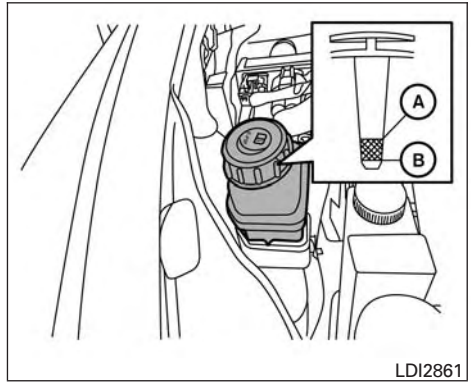

Check the fluid level in the reservoir.

The fluid level should be checked when the fluid is cold at fluid temperatures of 32 to 86°F (0 to 30°C). The fluid level can be checked with the level gauge which is attached to the cap. To check the fluid level, remove the cap. The fluid level should be between the MAX Ⓐ and MIN Ⓑ lines.

If the fluid is below the MIN Ⓑ line, add Genuine NISSAN E-PSF or equivalent. Remove the cap and fill through the opening.

⚠ WARNING

Power steering fluid is poisonous and should be stored carefully in marked containers out of the reach of children.

⚠ CAUTION

- **DO NOT OVERFILL.**
- **Use of a power steering fluid other than Genuine NISSAN E-PSF or equivalent will prevent the power steering system from operating properly.**

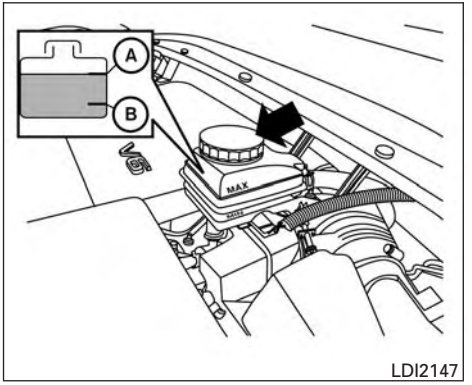

LDI2147

⚠ WARNING

- **Use only new fluid from a sealed container. Old, inferior or contaminated fluid may damage the brake system. The use of improper fluids can damage the brake system and affect the vehicle's stopping ability.**
- **Clean the filler cap before removing.**
- **Brake fluid is poisonous and should be stored carefully in marked containers out of reach of children.**

⚠ CAUTION

Do not spill the fluid on any painted surfaces. This will damage the paint. If fluid is spilled, immediately wash the surface with water.

Check the fluid level in the reservoir. If the brake fluid is below the MIN line Ⓑ, the brake warning light will illuminate. Add brake fluid up to the MAX line Ⓐ. For additional information on brake fluid type, refer to "Recommended fluids/lubricants and capacities" in the "Technical and consumer information" section of this manual.

If the brake fluid must be added frequently, the brake system should be thoroughly checked. It is recommended that you visit a NISSAN dealer for this service.

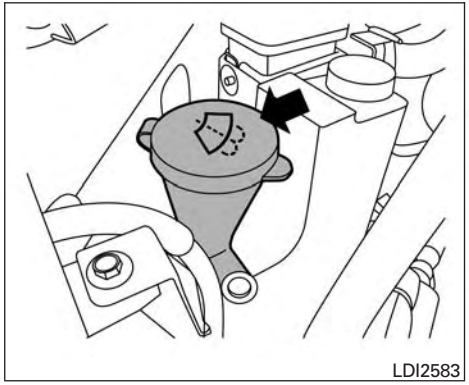

WINDSHIELD-WASHER FLUID RESERVOIR

Fill the windshield-washer fluid reservoir periodically. Add windshield-washer fluid when the "Low Washer Fluid" warning appears in the vehicle information display.

To fill the windshield-washer fluid reservoir, lift the cap off the reservoir and pour the windshield-washer fluid into the reservoir opening.

Add a washer solvent to the washer for better cleaning. In the winter season, add a windshield-washer antifreeze. Follow the manufacturer's instructions for the mixture ratio.

Refill the reservoir more frequently when driving conditions require an increased amount of windshield-washer fluid.

Recommended fluid is Genuine NISSAN Windshield Washer Concentrate Cleaner & Antifreeze or equivalent.

⚠ CAUTION

- **Do not substitute engine antifreeze coolant for windshield-washer fluid. This may result in damage to the paint.**
- **Do not fill the windshield-washer fluid reservoir with washer fluid concentrates at full strength. Some methyl alcohol based washer fluid concentrates may permanently stain the grille if spilled while filling the windshield-washer fluid reservoir.**
- **Pre-mix washer fluid concentrates with water to the manufacturer's recommended levels before pouring the fluid into the windshield-washer fluid reservoir. Do not use the windshield-washer fluid reservoir to mix the washer fluid concentrate and water.**

BATTERY

- Keep the battery surface clean and dry. Clean the battery with a solution of baking soda and water.
- Make certain the terminal connections are clean and securely tightened.
- If the vehicle is not to be used for 30 days or longer, disconnect the negative (-) battery terminal cable to prevent discharge.

NOTE:

Care should be taken to avoid situations that can lead to potential battery discharge and potential no-start conditions such as:

1. Installation or extended use of electronic accessories that consume battery power when the engine is not running (Phone chargers, GPS, DVD players, etc).
2. Vehicle is not driven regularly and/or only driven short distances. In these cases, the battery may need to be charged to maintain battery health.

⚠ WARNING

- **Do not expose the battery to flames, an electrical spark or a cigarette. Hydrogen gas generated by the battery is explosive. Explosive gases can cause blindness or injury. Do not allow battery fluid to contact your skin, eyes, fabrics or painted surfaces. Sulfuric acid can cause blindness or injury. After touching a battery or battery cap, do not touch or rub your eyes. Thoroughly wash your hands. If the acid contacts your eyes, skin or clothing, immediately flush with water for at least 15 minutes and seek medical attention.**
- **Do not operate the vehicle if the fluid in the battery is low. Low battery fluid can cause a higher load on the battery which can generate heat, reduce battery life, and in some cases lead to an explosion.**
- **When working on or near a battery, always wear suitable eye protection and remove all jewelry.**
- **Battery posts, terminals and related accessories contain lead and lead compounds. Wash hands after handling.**
- **Keep battery out of the reach of children.**
- **Do not tip the battery. Keep the vent caps tight and the battery level.**

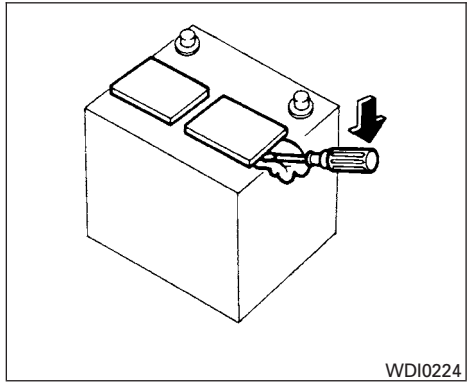

1. Remove the vent caps with a screwdriver as shown. Use a cloth to protect the battery case.

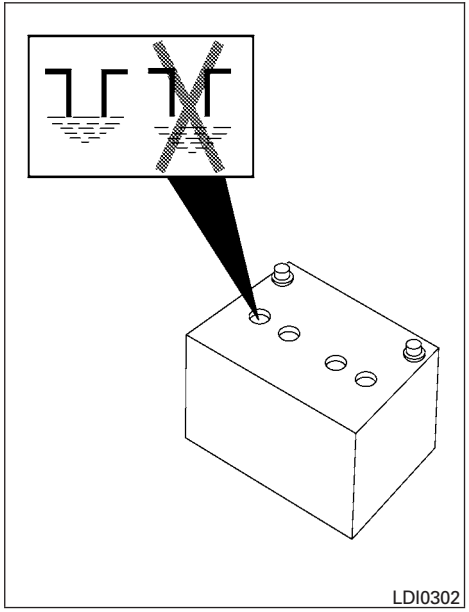

2. Check the fluid level in each cell. If it is necessary to add fluid, add only distilled water to bring the level up to the bottom of the filler opening. **Do not overfill.** Reinstall the vent caps.

Vehicles operated in high temperatures or under severe conditions require frequent checks of the battery fluid level.

JUMP STARTING

If jump starting is necessary, refer to “Jump starting” in the “In case of emergency” section of this manual. If the engine does not start by jump starting, the battery may have to be replaced. It is recommended that you visit a NISSAN dealer for this service.

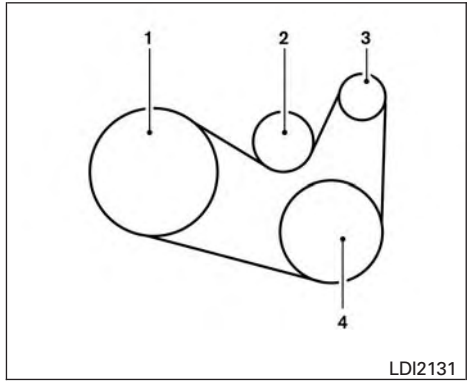

VQ35DD engine

1. Crankshaft pulley
2. Drive belt automatic tensioner pulley
3. Generator pulley
4. Air conditioner compressor pulley

⚠ WARNING

Be sure the ignition switch is placed in the OFF or LOCK position before servicing drive belt. The engine could rotate unexpectedly.

1. Visually inspect the belt for signs of unusual wear, cuts, fraying or looseness. If the belt is in poor condition or is loose, have it replaced or adjusted. It is recommended that you visit a NISSAN dealer for this service.
2. Have the belt checked regularly for condition and tension in accordance with the maintenance schedule found in the "Maintenance and schedules" section of this manual.

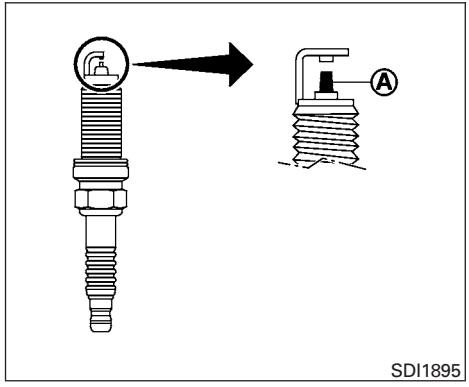

REPLACING SPARK PLUGS

Iridium-tipped spark plugs

It is not necessary to replace iridium-tipped Ⓐ spark plugs as frequently as conventional type spark plugs because they last much longer. Follow the maintenance log shown in the "Maintenance and schedules" section of this manual. Do not service iridium-tipped spark plugs by cleaning or regapping.

- **Always replace spark plugs with recommended or equivalent ones.**

⚠ WARNING

Be sure the engine and ignition switch are off and that the parking brake is engaged securely.

⚠ CAUTION

Be sure to use the correct socket to remove the spark plugs. An incorrect socket can damage the spark plugs.

If replacement is required, it is recommended that you visit a NISSAN dealer for this service.

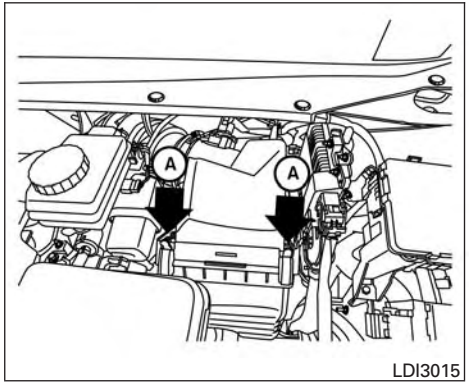

LDI3015

WARNING

- **Operating the engine with the air cleaner filter off can cause you or others to be burned. The air cleaner filter not only cleans the intake air, it also stops the flame if the engine backfires. If the air cleaner is not installed and the engine backfires, you could be burned. Never drive with the air cleaner filter off. Be cautious working on the engine when the air cleaner is off.**
- **Never pour fuel into the throttle body or attempt to start the engine with the air cleaner removed. Doing so could result in serious injury.**

To remove the filter from the air cleaner, push the tabs Ⓐ and pull the cover upward.

The viscous paper type filter element should not be cleaned and reused. Replace the air filter according to the maintenance log shown in the "Maintenance and schedules" section of this manual.

When replacing the air filter, wipe the inside of the air cleaner housing and the cover with a damp cloth.

NOTE:

After installing a new air cleaner, make sure the air cleaner cover is seated in the housing and latch the clips Ⓐ.

IN-CABIN MICROFILTER

The in-cabin microfilter restricts the entry of airborne dust and pollen particles and reduces some objectionable outside odors. The filter is located behind the glove box. For additional information, refer to the "Maintenance and schedules" section of this manual for change intervals.

If replacement is required, it is recommended that you visit a NISSAN dealer for this service.

CLEANING

If your windshield is not clear after using the windshield-washer or if a wiper blade chatters when running, wax or other material may be on the blade or windshield.

Clean the outside of the windshield with a washer solution or a mild detergent. Your windshield is clean if beads do not form when rinsing with clear water.

Clean each blade by wiping it with a cloth soaked in a washer solution or a mild detergent. Then rinse the blades with clear water. If your windshield is still not clear after cleaning the blades and using the wiper, replace the blades.

⚠ CAUTION

Worn windshield wiper blades can damage the windshield and impair driver vision.

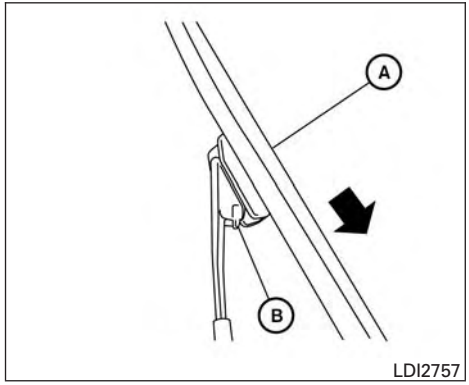

REPLACING

Replace the wiper blades if they are worn.

To replace the windshield wiper blades, follow the procedure below:

1. Lift the wiper arm away from the windshield.
2. Push the release tab Ⓑ.
3. Move the wiper blade Ⓐ down and remove.
4. Insert the new wiper blade onto the wiper arm until it clicks into place.
5. Push wiper on to windshield.

⚠ CAUTION

- **After wiper blade replacement, return the wiper arm to its original position; otherwise it may be damaged when the hood is opened.**
- **Make sure the wiper blades contact the glass; otherwise the arms may be damaged from wind pressure.**

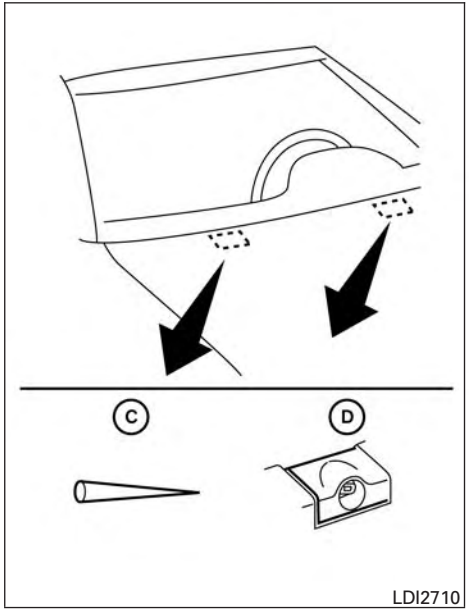

If you wax the surface of the hood, be careful not to let wax get into the washer nozzle Ⓓ. This may cause clogging or improper windshield-washer operation. If wax gets into the nozzle, remove it with a needle or small pin Ⓒ.

Rear window wiper blade

If checking or replacement is required, it is recommended that you visit a NISSAN dealer for this service.

If the brakes do not operate properly, it is recommended that you have the brakes checked by a NISSAN dealer.

Self-adjusting brakes

Your vehicle is equipped with self-adjusting brakes.

The front and rear disc-type brakes self-adjust every time the brake pedal is applied.

⚠ WARNING

Have your brake system checked if the brake pedal height does not return to normal. It is recommended that you visit a NISSAN dealer for this service.

Brake pad wear indicators

The disc brake pads on your vehicle have audible wear indicators. When a brake pad requires replacement, a high pitched scraping or screeching sound will be heard when the vehicle is in motion. The noise will be heard whether or not the brake pedal is depressed. Have the brakes checked as soon as possible if the wear indicator sound is heard.

Under some driving or climate conditions, occasional brake squeak, squeal or other noise may be heard. Occasional brake noise during light to moderate stops is normal and does not affect the function or performance of the brake system.

Proper brake inspection intervals should be followed. For additional information regarding brake inspections, refer to the appropriate maintenance schedule information in the "Maintenance and schedules" section of this manual.

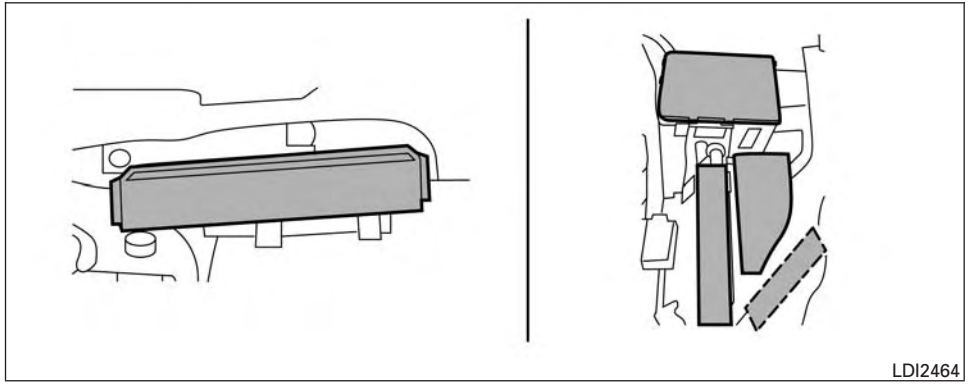

ENGINE COMPARTMENT

⚠ WARNING

Never use a fuse of higher or lower amperage rating than that specified on the fuse box cover. This could damage the electrical system or electronic control units or cause a fire.

If any electrical equipment does not come on, check for an open fuse.

1. Be sure the ignition switch and the headlight switch are OFF.
2. Open the engine hood.
3. Remove the fuse box cover by pushing the tab and lifting the cover up.
4. Remove the fuse with the fuse puller. The fuse puller is located in the fuse block in the passenger compartment.

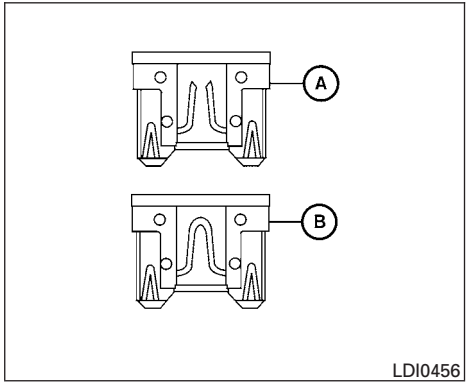

5. If the fuse is open Ⓐ, replace it with a new fuse Ⓑ.
6. If a new fuse also opens, have the electrical system checked and repaired. It is recommended that you visit a NISSAN dealer for this service.

Fusible links

If the electrical equipment does not operate and fuses are in good condition, check the fusible links. If any of these fusible links are melted, replace with only Genuine NISSAN parts.

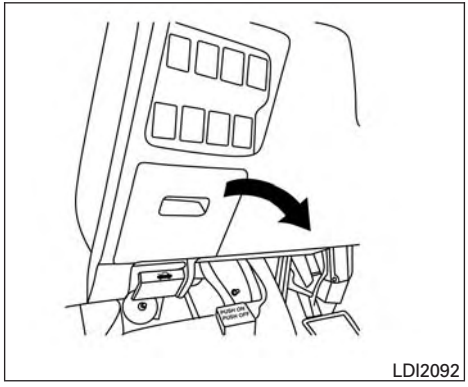

PASSENGER COMPARTMENT

⚠ WARNING

Never use a fuse of higher or lower amperage rating than that specified on the fuse box cover. This could damage the electrical system or electronic control units or cause a fire.

If any electrical equipment does not operate, check for an open fuse.

1. Be sure the ignition switch and the headlight switch are OFF.
2. Pull the fuse box cover to remove.
3. Remove the fuse with the fuse puller.

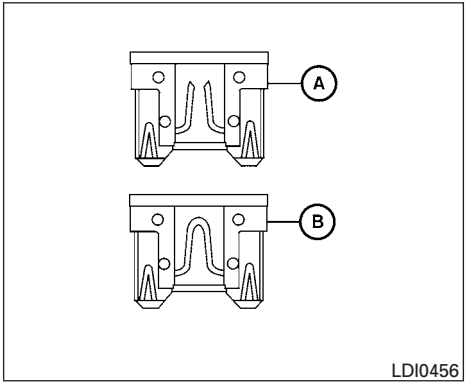

4. If the fuse is open Ⓐ, replace it with an equivalent good fuse Ⓑ.
5. Reverse step 2 to reinstall the box cover.
6. If a new fuse also opens, have the electrical system checked and repaired. It is recommended that you visit a NISSAN dealer for this service.

⚠ CAUTION

Be careful not to allow children to swallow the battery or removed parts.

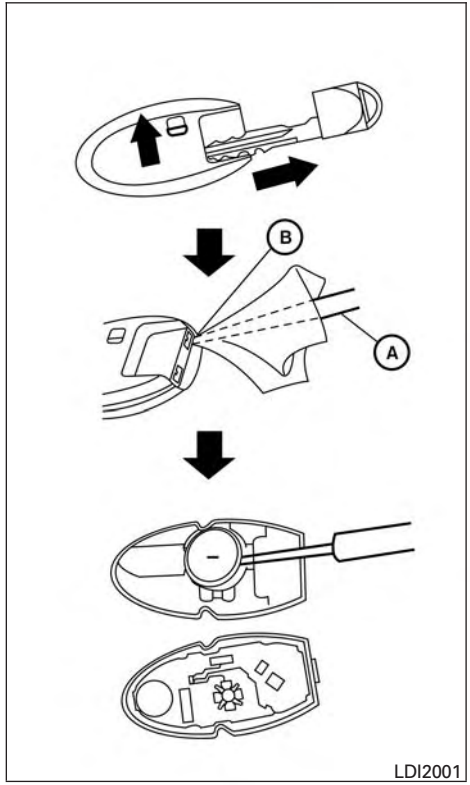

NISSAN INTELLIGENT KEY®

Replace the battery in the Intelligent Key as follows:

1. Remove the mechanical key from the Intelligent Key.
2. Insert a small flathead screwdriver Ⓐ into the slit Ⓑ of the corner and twist it to separate the upper part from the lower part. Place a cloth over the screwdriver to protect the casing.

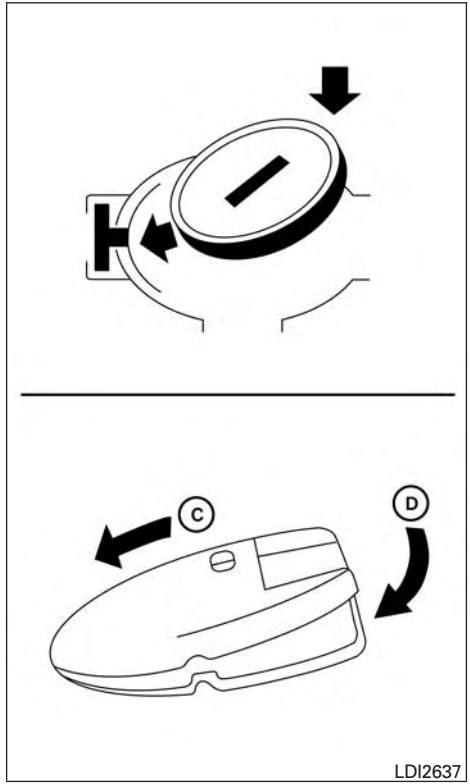

3. Replace the battery with a new one.

   Recommended battery: CR2032 or equivalent.

   - Do not touch the internal circuit and electric terminals as doing so could cause a malfunction.
   - Hold the battery by the edges. Holding the battery across the contact points will seriously deplete the storage capacity.
   - Make sure that the + side faces the bottom of the lower part.
4. Close the lid securely as illustrated with Ⓒ and Ⓓ.
5. Operate the buttons to check the operation.

If you need assistance with replacement, it is recommended that you visit a NISSAN dealer for this service.

FCC Notice:

For USA:
This device complies with Part 15 of the FCC Rules. Operation is subject to the following two conditions: (1) This device may not cause harmful interference, and (2) this device must accept any interference received, including interference that may cause undesired operation.

Note:

Changes or modifications not expressly approved by the party responsible for compliance could void the user's authority to operate the equipment.

For Canada:
This device complies with Industry Canada licence-exempt RSS standard(s). Operation is subject to the following two conditions: (1) this device may not cause interference, and (2) this device must accept any interference, including interference that may cause undesired operation of the device.

HEADLIGHTS

For additional information on headlight bulb replacement, refer to the instructions outlined in this section.

Replacing the halogen headlight bulb (if so equipped)

If bulb replacement is required, it is recommended that you visit a NISSAN dealer for this service.

⚠ CAUTION

- **Aiming is not necessary after replacing the bulb. When aiming adjustment is necessary, it is recommended that you visit a NISSAN dealer for this service.**
- **Do not leave the headlight assembly open without a bulb installed for a long period of time. Dust, moisture, smoke, etc. entering the headlight body may affect bulb performance. Remove the bulb from the headlight assembly just before a replacement bulb is installed.**
- **Only touch the base when handling the bulb. Never touch the glass envelope. Touching the glass could significantly affect bulb life and/or headlight performance.**
- **High pressure halogen gas is sealed inside the halogen bulb. The bulb may break if the glass envelope is scratched or the bulb is dropped.**
- **Use the same number and wattage as shown in the chart.**

Fog may temporarily form inside the lenses of the exterior lights in the rain or in a car wash. A temperature difference between the inside and the outside of the lens causes the fog. This is not a malfunction. If large drops of water collect inside the lens, it is recommended that you visit a NISSAN dealer for servicing.

FOG LIGHTS (if so equipped)

For additional information on fog light bulb replacement, refer to the instructions outlined in this section.

Replacing the fog light bulb

If bulb replacement is required, it is recommended that you visit a NISSAN dealer for this service.

⚠ CAUTION

- **High pressure halogen gas is sealed inside the halogen bulb. The bulb may break if the glass envelope is scratched or the bulb is dropped.**
- **When handling the bulb, do not touch the glass envelope.**
- **Use the same number and wattage as originally installed as shown in the chart.**
- **Do not leave the bulb out of the fog light for a long period of time as dust, moisture and smoke may enter the fog light body and affect the performance of the fog light.**

EXTERIOR AND INTERIOR LIGHTS

Item	Wattage (W)	Bulb No.
Headlight assembly (Type A) (if so equipped)*		
High	65	H9
Low	55	H11
Park/ Daytime running	—	—
Turn	28/8	7444NA
Side marker	5	W5W
Headlight assembly (Type B) (if so equipped)*		
High	65	H9
Low	—	—
Park/ Daytime running	—	—
Turn	28/8	7444NA
Side marker	5	W5W
Front fog lights (if so equipped)	55	H11
Map light*	—	—
Footwell light (if so equipped)*	3.4	158
Personal lights*	8	—
Glove box light*	—	—
Step light (if so equipped)*	3.8	194
Courtesy light*	—	—
Vanity mirror light (if so equipped)*	—	—
Cargo light*	8	—
High-mounted stop light*	—	—
Rear combination light*		
Stop/Tail	21/5	W21/5W
Turn	21	WY21W
Side marker	5	W5W
Backup (reversing)*	16	W16W
License plate light*	5	W5W

* It is recommended that you visit a NISSAN dealer for replacement.

Always check with the Parts Department at a NISSAN dealer for the latest parts information.

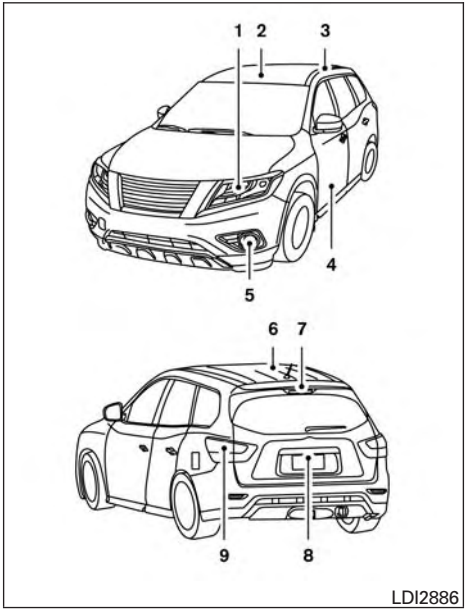

1. Headlight assembly
2 Map light
3 Personal light
4. Step light (if so equipped)
5. Fog light (if so equipped)
6. Cargo light
7. High-mounted stop light
8. License plate light
9. Rear combination light

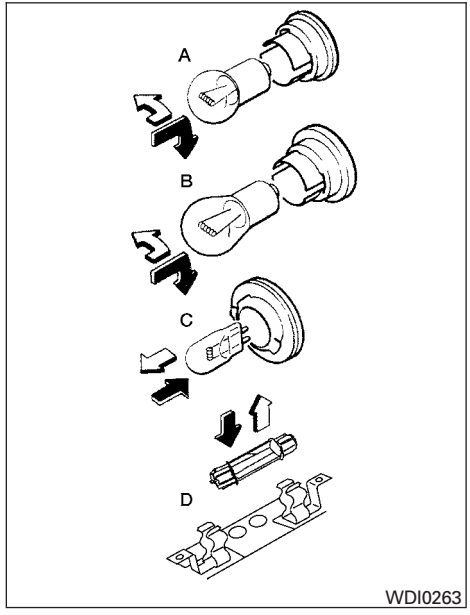

Replacement procedures

All other lights are either type A, B, C or D. When replacing a bulb, first remove the lens, lamp and/or cover.

⇧ Indicates bulb removal

⬆ Indicates bulb installation

If you have a flat tire, refer to "Flat tire" in the "In case of emergency" section of this manual.

TIRE PRESSURE

Tire Pressure Monitoring System (TPMS)

⚠WARNING

Radio waves could aversely effect electric medical equipment. Those who use a pacemaker should contact the electric medical equipment manufacturer for the possible influences before use.

This vehicle is equipped with the Tire Pressure Monitoring System (TPMS). It monitors tire pressure of all tires except the spare. When the low tire pressure warning light is lit and the Tire Pressure Low - Add Air warning appears in the vehicle information display, one or more of your tires is significantly under-inflated. If equipped, the system also displays pressure of all tires (except the spare tire) on the display screen by sending a signal from a sensor that is installed in each wheel.

The TPMS will activate only when the vehicle is driven at speeds above 16 mph (25 km/h). Also, this system may not detect a sudden drop in tire pressure (for example a flat tire while driving).

For additional information, refer to "Low tire pressure warning light" in the "Instruments and controls" section, "Tire Pressure Monitoring System (TPMS)" in the "Starting and driving" section and "Flat tire" in the "In case of emergency" section of this manual.

Tire inflation pressure

Check the tire pressures (including the spare) often and always prior to long distance trips. The recommended tire pressure specifications are shown on the F.M.V.S.S./C.M.V.S.S. certification label or the Tire and Loading Information label under the "Cold Tire Pressure" heading. The Tire and Loading Information label is affixed to the driver side center pillar. Tire pressures should be checked regularly because:

- Most tires naturally lose air over time.
- Tires can lose air suddenly when driven over potholes or other objects or if the vehicle strikes a curb while parking.

The tire pressures should be checked when the tires are cold. The tires are considered COLD after the vehicle has been parked for 3 or more hours, or driven less than 1 mile (1.6 km) at moderate speeds.

The TPMS with Easy-Fill Tire Alert (if so equipped) provides visual and audible signals outside the vehicle for inflating tires to the recommended COLD tire pressure. For additional information, refer to "TPMS with Easy-Fill Tire Alert" in the "Starting and driving" section of this manual.

Incorrect tire pressure, including under inflation, may adversely affect tire life and vehicle handling.

⚠ WARNING

- **Improperly inflated tires can fail suddenly and cause an accident.**
- **The Gross Vehicle Weight Rating (GVWR) is located on the F.M.V.S.S./C.M.V.S.S. certification label. The vehicle weight capacity is indicated on the Tire and Loading Information label. Do not load your vehicle beyond this capacity. Overloading your vehicle may result in reduced tire life, unsafe operating conditions due to premature tire failure, or unfavorable handling characteristics and could also lead to a serious accident. Loading beyond the specified capacity may also result in failure of other vehicle components.**
- **Before taking a long trip, or whenever you heavily load your vehicle, use a tire pressure gauge to ensure that the tire pressures are at the specified level.**
- **For additional information regarding tires, refer to "Important Tire Safety Information" (US) or "Tire Safety Information" (Canada) in the Warranty Information Booklet.**

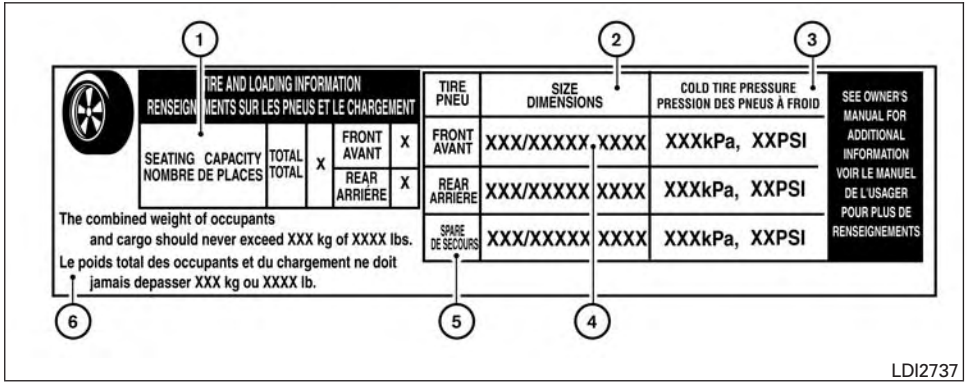

Tire and Loading Information label

① Seating capacity: The maximum number of occupants that can be seated in the vehicle.

② Original tire size: The size of the tires originally installed on the vehicle at the factory.

③ Cold tire pressure: Inflate the tires to this pressure when the tires are cold. Tires are considered COLD after the vehicle has been parked for 3 or more hours, or driven less than 1 mile (1.6 km) at moderate speeds. The recommended cold tire inflation is set by the manufacturer to provide the best balance of tire wear, vehicle handling, driveability, tire noise, etc., up to the vehicle's GVWR.

④ Tire size - refer to "Tire labeling" in this section.

⑤ Spare tire size.

⑥ Vehicle load limit: Refer to "Vehicle loading information" in the "Technical and consumer information" section of this manual.

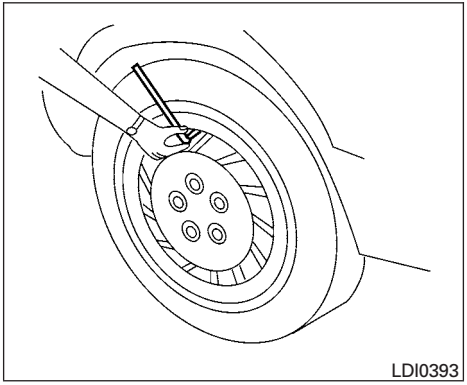

Checking tire pressure

1. Remove the valve stem cap from the tire.
2. Press the pressure gauge squarely onto the valve stem. Do not press too hard or force the valve stem sideways, or air will escape. If the hissing sound of air escaping from the tire is heard while checking the pressure, reposition the gauge to eliminate this leakage.
3. Remove the gauge.
4. Read the tire pressure on the gauge stem and compare to the specification shown on the Tire and Loading Information label.
5. Add air to the tire as needed. If too much air is added, press the core of the valve stem briefly with the tip of the gauge stem to release pressure. Recheck the pressure and add or release air as needed.
6. Install the valve stem cap.
7. Check the pressure of all other tires, including the spare.

Size	Cold Tire Inflation Pressure
Front and Rear Original Tire: 235/65R18	33 psi, 230 kPa
Front and Rear Original Tire: 235/55R20	35 psi, 240 kPa
Spare Tire: T165/90D18	60 psi, 420 kPa

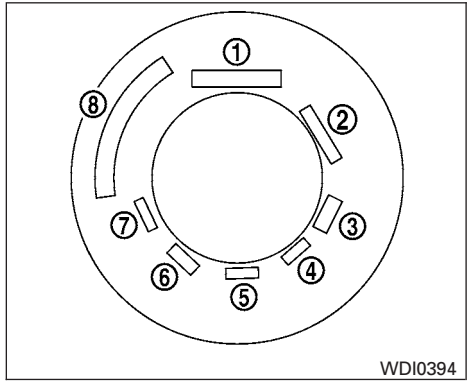

Example

TIRE LABELING

Federal law requires tire manufacturers to place standardized information on the sidewall of all tires. This information identifies and describes the fundamental characteristics of the tire and also provides the tire identification number (TIN) for safety standard certification. The TIN can be used to identify the tire in case of a recall.

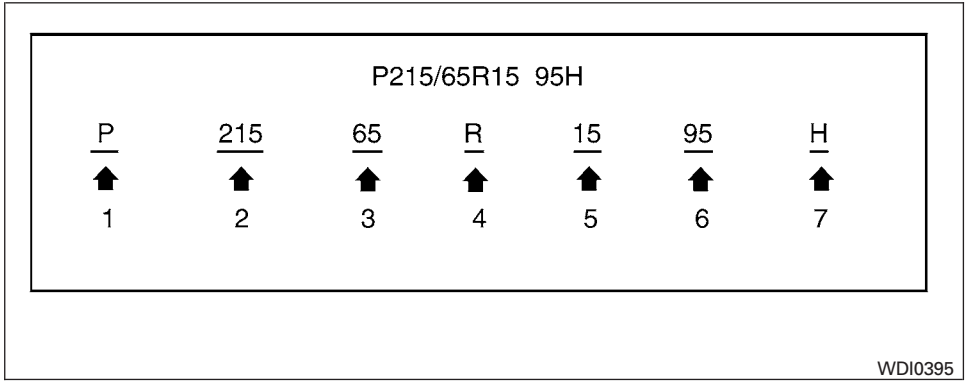

Example

① Tire size (example: P215/65R15 95H)

1. P: The “P” indicates the tire is designed for passenger vehicles (not all tires have this information).
2. Three-digit number (215): This number gives the width in millimeters of the tire from sidewall edge to sidewall edge.
3. Two-digit number (65): This number, known as the aspect ratio, gives the tire’s ratio of height to width.
4. R: The “R” stands for radial.
5. Two-digit number (15): This number is the wheel or rim diameter in inches.
6. Two- or three-digit number (95): This number is the tire’s load index. It is a measurement of how much weight each tire can support. You may not find this information on all tires because it is not required by law.
7. H: Tire speed rating. You should not drive the vehicle faster than the tire speed rating.

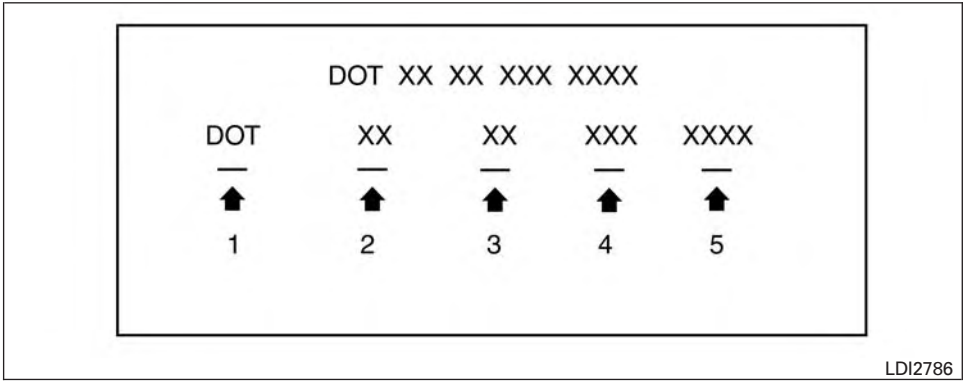

Example

② TIN (Tire Identification Number) for a new tire (example: DOT XX XX XXX XXXX)

1. DOT: Abbreviation for the “Department Of Transportation”. The symbol can be placed above, below or to the left or right of the Tire Identification Number.
2. Two-digit code: Manufacturer’s identification mark.
3. Two-digit code: Tire size.
4. Three-digit code: Tire type code (Optional).
5. Four numbers represent the week and year the tire was built. For example, the numbers 3103 means the 31st week of 2003. If these numbers are missing then look on the other sidewall of the tire.

③ Tire ply composition and material

The number of layers or plies of rubber-coated fabric in the tire. Tire manufacturers also must indicate the materials in the tire, which include steel, nylon, polyester and others.

④ Maximum permissible inflation pressure

This number is the greatest amount of air pressure that should be put in the tire. Do not exceed the maximum permissible inflation pressure.

⑤ Maximum load rating

This number indicates the maximum load in kilograms and pounds that can be carried by the tire. When replacing the tires on the vehicle, always use a tire that has the same load rating as the factory installed tire.

⑥ Term of “tubeless” or “tube type”

Indicates whether the tire requires an inner tube (“tube type”) or not (“tubeless”).

⑦ The word “radial”

The word “radial” is shown if the tire has radial structure.

⑧ Manufacturer or brand name

Manufacturer or brand name is shown.

Other Tire-related Terminology

In addition to the many terms that are defined throughout this section, Intended Outboard Sidewall is (1) the sidewall that contains a whitewall, bears white lettering or bears manufacturer, brand, and/or model name molding that is higher or deeper than the same molding on the other sidewall of the tire, or (2) the outward facing sidewall of an asymmetrical tire that has a particular side that must always face outward when mounted on a vehicle.

TYPES OF TIRES

⚠ WARNING

- **When changing or replacing tires, be sure all four tires are of the same type (i.e., Summer, All Season or Snow) and construction. A NISSAN dealer may be able to help you with information about tire type, size, speed rating and availability.**
- **Replacement tires may have a lower speed rating than the factory equipped tires, and may not match the potential maximum vehicle speed. Never exceed the maximum speed rating of the tire.**
- **Replacing tires with those not originally specified by NISSAN could affect the proper operation of the low tire pressure warning system.**
- **For additional information regarding tires, refer to "Important Tire Safety Information" (US) or "Tire Safety Information" (Canada) in the Warranty Information Booklet.**

All season tires

NISSAN specifies All Season tires on some models to provide good performance all year, including snowy and icy road conditions. All Season tires are identified by ALL SEASON and/or M&S on the tire sidewall. Snow tires have better snow traction than All Season tires and may be more appropriate in some areas.

Summer tires

NISSAN specifies summer tires on some models to provide superior performance on dry roads. Summer tire performance is substantially reduced in snow and ice. Summer tires do not have the tire traction rating "M&S" on the tire sidewall.

If you plan to operate your vehicle in snowy or icy conditions, NISSAN recommends the use of SNOW tires or ALL SEASON tires on all four wheels.

Snow tires

If snow tires are needed, it is necessary to select tires equivalent in size and load rating to the original equipment tires. If you do not, it can adversely affect the safety and handling of your vehicle.

Generally, snow tires have lower speed ratings than factory equipped tires and may not match the potential maximum vehicle speed. Never exceed the maximum speed rating of the tire.

If you install snow tires, they must be the same size, brand, construction and tread pattern on all four wheels.

For additional traction on icy roads, studded tires may be used. However, some U.S. states and Canadian provinces prohibit their use. Check local, state and provincial laws before installing studded tires. Skid and traction capabilities of studded snow tires on wet or dry surfaces may be poorer than that of non-studded snow tires.

TIRE CHAINS

⚠ CAUTION

Tire chains/cables should not be installed on 235/55R20 size tires. Installation of the tire chains/cables on 235/55R20 size tires will cause damage to the vehicle. If you plan to use tire chains/cables, you should install 235/65R18 size tires on your vehicle.

Use of tire chains may be prohibited according to location. Check the local laws before installing tire chains. When installing tire chains, make sure they are the proper size for the tires on your vehicle and are installed according to the chain manufacturer's suggestions. **Use only SAE class "S" chains.** Class "S" chains are used on vehicles with restricted tire to vehicle clearance. Vehicles that can use Class "S" chains are designed to meet the minimum clearances between the tire and the closest vehicle suspension or body component required to accommodate the use of a winter traction device (tire chains or cables). The minimum clearances are determined using the factory equipped tire size. Other types may damage your vehicle. Use chain tensioners when recommended by the tire chain manufacturer to ensure a tight fit. Loose end links of the tire chain must be secured or removed to prevent the possibility of whipping action damage to the fenders or underbody. If possible, avoid fully loading your vehicle when using tire chains. In addition, drive at a reduced speed. Otherwise, your vehicle may be damaged and/or vehicle handling and performance may be adversely affected.

Do not use tire chains on dry roads. Driving with chains in such conditions can cause damage to the various mechanisms of the vehicle due to some overstress.

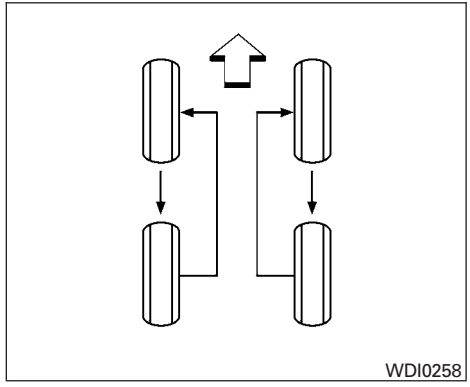

CHANGING WHEELS AND TIRES

Tire rotation

NISSAN recommends rotating the tires every 5,000 miles (8,000 km).

For additional information on tire replacing procedures, refer to "Flat tire" in the "In case of emergency" section of this manual.

As soon as possible, tighten the wheel nuts to the specified torque with a torque wrench.

Wheel nut tightening torque:
83 ft-lb (113 N·m)

The wheel nuts must be kept tightened to specifications at all times. It is recommended that wheel nuts be tightened to specification at each tire rotation interval.

⚠WARNING

- **After rotating the tires, check and adjust the tire pressure.**
- **Retighten the wheel nuts when the vehicle has been driven for 600 miles (1,000 km) (also in cases of a flat tire, etc.).**
- **Do not include the spare tire in the tire rotation.**
- **For additional information regarding tires, refer to "Important Tire Safety Information" (US) or "Tire Safety Information" (Canada) in the Warranty Information Booklet.**

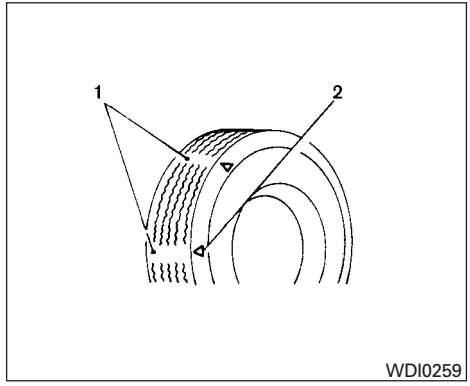

Tire wear and damage

1. Wear indicator
2. Location mark

⚠WARNING

- **Tires should be periodically inspected for wear, cracking, bulging or objects caught in the tread. If excessive wear, cracks, bulging or deep cuts are found, the tire(s) should be replaced.**
- **The original tires have built-in tread wear indicators. When the wear indicators are visible, the tire(s) should be replaced.**
- **Tires degrade with age and use. Have tires, including the spare, over 6 years old checked by a qualified technician because some tire damage may not be obvious. Replace the tires as necessary to prevent tire failure and possible personal injury.**
- **Improper service of the spare tire may result in serious personal injury. If it is necessary to repair the spare tire, it is recommended that you visit a NISSAN dealer for this service.**
- **For additional information regarding tires, refer to "Important Tire Safety Information" (US) or "Tire Safety Information" (Canada) in the Warranty Information Booklet.**

Replacing wheels and tires

When replacing a tire, use the same size, tread design, speed rating and load carrying capacity as originally equipped. For additional information, refer to “Wheels and tires” in the “Technical and consumer information” section of this manual.

⚠WARNING

- **The use of tires other than those recommended or the mixed use of tires of different brands, construction (bias, bias-belted or radial), or tread patterns can adversely affect the ride, braking, handling, Vehicle Dynamic Control (VDC) system, ground clearance, body-to-tire clearance, tire chain clearance, speedometer calibration, headlight aim and bumper height. Some of these effects may lead to accidents and could result in serious personal injury.**
- **If your vehicle was originally equipped with 4 tires that were the same size and you are only replacing 2 of the 4 tires, install the new tires on the rear axle. Placing new tires on the front axle may cause loss of vehicle control in some driving conditions and cause an accident and personal injury.**
- **If the wheels are changed for any reason, always replace with wheels which have the same off-set dimension. Wheels of a different off-set could cause premature tire wear, degrade vehicle handling characteristics, affect the VDC system and/or interference with the brake discs. Such interference can lead to decreased braking efficiency and/or early brake pad wear. For additional information on wheel off-set dimensions, refer to “Wheels and tires” in the “Technical and consumer information” section of this manual.**
- **Since the spare tire is not equipped with the TPMS, when a spare tire is mounted or a wheel is replaced, tire pressure will not be indicated, the TPMS will not function and the low tire pressure warning light will flash for approximately 1 minute. The light will remain on after 1 minute. Have your tires replaced and/or TPMS system reset as soon as possible. It is recommended that you visit a NISSAN dealer for this service.**
- **Replacing tires with those not originally specified by NISSAN could affect the proper operation of the TPMS.**
- **The TPMS sensor may be damaged if it is not handled correctly. Be careful when handling the TPMS sensor.**
- **When replacing the TPMS sensor, the ID registration may be required. It is recommended that you visit a NISSAN dealer for ID registration.**
- **Do not use a valve stem cap that is not specified by NISSAN. The valve stem cap may become stuck.**
- **Be sure that the valve stem caps are correctly fitted. Otherwise the valve may be clogged up with dirt and cause a malfunction or loss of pressure.**
- **Do not install a damaged or deformed wheel or tire even if it has been repaired. Such wheels or tires could have structural damage and could fail without warning.**
- **The use of retread tires is not recommended.**
- **For additional information regarding tires, refer to “Important Tire Safety Information” (US) or “Tire Safety Information” (Canada) in the Warranty Information Booklet.**

4x4 Four-wheel drive models

⚠ CAUTION

Always use tires of the same type, size, brand, construction (bias, bias-belted or radial), and tread pattern on all four wheels. Failure to do so may result in a circumference difference between tires on the front and rear axles which will cause excessive tire wear and may damage the transmission, transfer case and differential gears.

If excessive tire wear is found, it is recommended that all four tires be replaced with tires of the same size, brand, construction and tread pattern. The tire pressure and wheel alignment should also be checked and corrected as necessary. It is recommended that you visit a NISSAN dealer for this service.

Wheel balance

Unbalanced wheels may affect vehicle handling and tire life. Even with regular use, wheels can get out of balance. Therefore, they should be balanced as required.

Wheel balance service should be performed with the wheels off the vehicle. Spin balancing the wheels on the vehicle could lead to mechanical damage.

- **For additional information regarding tires, refer to "Important Tire Safety Information" (US) or "Tire Safety Information" (Canada) in the Warranty Information Booklet.**

Care of wheels

- Wash the wheels when washing the vehicle to maintain their appearance.
- Clean the inner side of the wheels when the wheel is changed or the underside of the vehicle is washed.
- Do not use abrasive cleaners when washing the wheels.
- Inspect wheel rims regularly for dents or corrosion. Such damage may cause loss of pressure or poor seal at the tire bead.
- NISSAN recommends waxing the road wheels to protect against road salt in areas where it is used during winter.

Spare tire (TEMPORARY USE ONLY spare tire)

Since the spare tire is not equipped with the TPMS, when a spare tire is mounted (TEMPORARY USE ONLY or conventional), the TPMS will not function.

Observe the following precautions if the TEMPORARY USE ONLY spare tire must be used. Otherwise, your vehicle could be damaged or involved in an accident:

⚠ WARNING

- **The spare tire should be used for emergency use only. It should be replaced with the standard tire at the first opportunity to avoid possible tire or differential damage.**
- **Drive carefully while the TEMPORARY USE ONLY spare tire is installed. Avoid sharp turns and abrupt braking while driving.**
- **Periodically check spare tire inflation pressure. Always keep the pressure of the TEMPORARY USE ONLY spare tire at 420 kPa, 4.2 bar (60 psi).**
- **With the TEMPORARY USE ONLY spare tire installed do not drive the vehicle at speeds faster than 50 mph (80 km/h).**
- **When driving on roads covered with snow or ice, the TEMPORARY USE ONLY spare tire should be used on the rear wheels and the original tire used on the front wheels (drive wheels).**

- **Tire tread of the TEMPORARY USE ONLY spare tire will wear at a faster rate than the standard tire. Replace the spare tire as soon as the tread wear indicators appear.**
- **Do not use the spare tire on other vehicles.**
- **Do not use more than one spare tire at the same time.**
- **Do not tow a trailer when the TEMPORARY USE ONLY spare tire is installed.**

⚠ CAUTION

- **Do not use tire chains on a TEMPORARY USE ONLY spare tire. Tire chains will not fit properly and may cause damage to the vehicle.**
- **Because the TEMPORARY USE ONLY spare tire is smaller than the original tire, ground clearance is reduced. To avoid damage to the vehicle, do not drive over obstacles. Also, do not drive the vehicle through an automatic car wash since it may get caught.**

9 Maintenance and schedules

Maintenance requirements. 9-2
General maintenance 9-2
Scheduled maintenance. 9-2
Where to go for service 9-2
General maintenance 9-2
Explanation of general maintenance items 9-2
Explanation of scheduled maintenance items 9-5
Emission Control System Maintenance: 9-5
Chassis and Body Maintenance: 9-6
Maintenance schedules 9-7
Additional Maintenance Items for severe operating conditions 9-7
Standard maintenance 9-7
Emission control system maintenance. 9-8
Chassis & body maintenance 9-10
Maintenance under severe operating conditions. 9-12
Severe driving conditions. 9-12
Maintenance log. 9-13

Some day-to-day and regular maintenance is essential to maintain your vehicle good mechanical condition, as well as its emissions and engine performance.

It is the owner's responsibility to make sure that the scheduled maintenance, as well as general maintenance, is performed.

As the vehicle owner, you are the only one who can ensure that your vehicle receives proper maintenance. You are a vital link in the maintenance chain.

GENERAL MAINTENANCE

General maintenance includes those items which should be checked during normal day-to-day operation. They are essential for proper vehicle operation. It is your responsibility to perform these procedures regularly as prescribed.

Performing general maintenance checks requires minimal mechanical skill and only a few general automotive tools.

These checks or inspections can be done by yourself, a qualified technician or, if you prefer, a NISSAN dealer.

SCHEDULED MAINTENANCE

The maintenance items listed in this section are required to be serviced at regular intervals. However under severe driving conditions, additional or more frequent maintenance will be required.

WHERE TO GO FOR SERVICE

If maintenance service is required or your vehicle appears to malfunction, have the systems checked and serviced. It is recommended that you visit a NISSAN dealer for this service.

NISSAN technicians are well-trained specialists and are kept up-to-date with the latest service information through technical bulletins, service tips and training programs. They are completely qualified to work on NISSAN vehicles **before** work begins.

You can be confident that a NISSAN dealer's service department can perform the service needed to meet the maintenance requirements on your vehicle.

During the normal day-to-day operation of the vehicle, general maintenance should be performed regularly as prescribed in this section. If you detect any unusual sounds, vibrations or smells, be sure to check for the cause or have a NISSAN dealer do it promptly. In addition, it is recommended that you visit a NISSAN dealer if you think that repairs are required.

When performing any checks or maintenance work, closely observe the "Maintenance precautions" in the "Do-it-yourself" section of this manual.

EXPLANATION OF GENERAL MAINTENANCE ITEMS

Additional information on the following items with " * " is found in the "Do-it-yourself" section of this manual.

Outside the vehicle

The maintenance items listed here should be performed from time to time, unless otherwise specified.

Doors and engine hood: Check that the doors and engine hood operate properly. Also ensure that all latches lock securely. Lubricate hinges, latches, latch pins, rollers and links if necessary.

Make sure that the secondary latch keeps the hood from opening when the primary latch is released.

When driving in areas using road salt or other corrosive materials, check lubrication frequently.

Lights*: Clean the headlights on a regular basis. Make sure that the headlights, stop lights, tail lights, turn signal lights, and other lights are all operating properly and installed securely. Also check headlight aim.

Road wheel nuts (lug nuts)*: When checking the tires, make sure no wheel nuts are missing, and check for any loose wheel nuts. Tighten if necessary.

Tire rotation*: Tires should be rotated every 5,000 miles (8,000 km).

Tires*: Check the pressure with a gauge often and always prior to long distance trips. If necessary, adjust the pressure in all tires, including the spare, to the pressure specified. Check carefully for damage, cuts or excessive wear.

Tire Pressure Monitoring System (TPMS) transmitter components: Replace the TPMS transmitter grommet seal, valve core and cap when the tires are replaced due to wear or age.

Wheel alignment and balance: If the vehicle should pull to either side while driving on a straight and level road, or if you detect uneven or abnormal tire wear, there may be a need for wheel alignment. If the steering wheel or seat vibrates at normal highway speeds, wheel balancing may be needed.

For additional information regarding tires, refer to “Important Tire Safety Information” (US) or “Tire Safety Information” (Canada) in the Warranty Information Booklet.

Windshield: Clean the windshield on a regular basis. Check the windshield at least every six months for cracks or other damage. Have a damaged windshield repaired by a qualified repair facility.

Windshield wiper blades*: Check for cracks or wear if they do not wipe properly.

Inside the vehicle

The maintenance items listed here should be checked on a regular basis, such as when performing scheduled maintenance, cleaning the vehicle, etc.

Accelerator pedal: Check the pedal for smooth operation and make sure the pedal does not catch or require uneven effort. Keep the floor mat away from the pedal.

Brake pedal: Check the pedal for smooth operation. If the brake pedal suddenly goes down further than normal, the pedal feels spongy or the vehicle seems to take longer to stop, have your vehicle checked immediately. It is recommended that you visit a NISSAN dealer for this service. Keep the floor mat away from the pedal.

Brakes: Check that the brakes do not pull the vehicle to one side when applied.

Continuously Variable Transmission (CVT) P (Park) position mechanism: On a fairly steep hill check that the vehicle is held securely with the shift lever in the P (Park) position without applying any brakes.

Parking brake: Check the parking brake operation regularly. The vehicle should be securely held on a fairly steep hill with only the parking brake applied. If the parking brake needs adjustment, it is recommended that you visit a NISSAN dealer for this service.

Seats: Check seat position controls such as seat adjusters, seatback recliner, etc., to ensure they operate smoothly and all latches lock securely in every position. Check that the head restraints/headrests move up and down smoothly and the locks (if so equipped) hold securely in all latched positions.

Seat belts: Check that all parts of the seat belt system (for example, buckles, anchors, adjusters and retractors) operate properly and smoothly, and are installed securely. Check the belt webbing for cuts, fraying, wear or damage.

Steering wheel: Check for changes in the steering system, such as excessive free play, hard steering or strange noises.

Warning lights and chimes: Make sure all warning lights and chimes are operating properly.

Windshield defroster: Check that the air comes out of the defroster outlets properly and in sufficient quantity when operating the heater or air conditioner.

Windshield wiper and washer*: Check that the wipers and washer operate properly and that the wipers do not streak.

Under the hood and vehicle

The maintenance items listed here should be checked periodically (for example, each time you check the engine oil or refuel).

Battery*: Check the fluid level in each cell. The fluid should be at the bottom of the filler opening. Vehicles operated in high temperatures or under severe conditions require frequent checks of the battery fluid level.

NOTE:

Care should be taken to avoid situations that can lead to potential battery discharge and potential no-start conditions such as:

1. **Installation or extended use of electronic accessories that consume battery power when the engine is not running (Phone chargers, GPS, DVD players, etc.).**
2. **Vehicle is not driven regularly and/or only driven short distances.**

In these cases, the battery may need to be charged to maintain battery health.

Brake fluid level*: Make sure that the brake fluid level is between the MAX and MIN lines on the reservoir.

Engine coolant level*: Check the coolant level when the engine is cold.

Engine drive belts*: Make sure the drive belts are not frayed, worn, cracked or oily.

Engine oil level*: Check the level after parking the vehicle on a level spot and turning off the engine. Wait more than 15 minutes for the oil to drain back into the oil pan.

Exhaust system: Make sure there are no loose supports, cracks or holes. If the sound of the exhaust seems unusual or there is a smell of exhaust fumes, immediately have the exhaust system inspected. It is recommended that you visit a NISSAN dealer for this service. For additional information, refer to “Exhaust gas (carbon monoxide)” in the “Starting and driving” section of this manual.

Fluid leaks: Check under the vehicle for fuel, oil, water or other fluid leaks after the vehicle has been parked for a while. Water dripping from the air conditioner after use is normal. If you should notice any leaks or if fuel fumes are evident, check for the cause and have it corrected immediately.

Power steering fluid level* and lines: Check the level when the fluid is cold, with the engine off. Check the lines for proper attachment, leaks, cracks, etc.

Radiator and hoses: Check the front of the radiator and clean off any dirt, insects, leaves, etc., that may have accumulated. Make sure the hoses have no cracks, deformation, rot or loose connections.

EXPLANATION OF SCHEDULED MAINTENANCE ITEMS

Underbody: The underbody is frequently exposed to corrosive substances such as those used on icy roads or to control dust. It is very important to remove these substances, otherwise rust may form on the floor pan, frame, fuel lines and around the exhaust system. At the end of winter, the underbody should be thoroughly flushed with plain water, being careful to clean those areas where mud and dirt may accumulate. For additional information, refer to the "Appearance and care" section of this manual.

Windshield-washer fluid*: Check that there is adequate fluid in the reservoir.

The following descriptions are provided to give you a better understanding of the scheduled maintenance items that should be regularly checked or replaced. The maintenance schedule indicates at which mileage/time intervals each item requires service.

In addition to scheduled maintenance, your vehicle requires that some items be checked during normal day-to-day operation. For additional information, refer to "General maintenance" in this section.

Items marked with **"*"** are recommended by NISSAN for reliable vehicle operation. You are not required to perform maintenance on these items in order to maintain the warranties which come with your NISSAN. Other maintenance items and intervals are required.

When applicable, additional information can be found in the "Do-it-yourself" section of this manual.

NOTE:

NISSAN does not advocate the use of non-OEM approved aftermarket flushing systems and strongly advises against performing these services on a NISSAN product. Many of the aftermarket flushing systems use non-OEM approved chemicals or solvents, the use of which has not been validated by NISSAN.

For recommended fuel, lubricants, fluids, grease, and refrigerant, refer to "Recommended fluids/lubricants and capacities" in the "Technical and consumer information" section of this manual.

EMISSION CONTROL SYSTEM MAINTENANCE:

Drive belts*: Check engine drive belts for wear, fraying or cracking and for proper tension. Replace any damaged drive belts.

Engine air filter: Replace at specified intervals. When driving for prolonged periods in dusty conditions, check/replace the filter more frequently.

Engine coolant*: Replace coolant at the specified interval. When adding or replacing coolant, be sure to use only Genuine NISSAN Long Life Antifreeze/Coolant (blue) or equivalent with the proper mixture. (For additional information on the proper mixture for your area, refer to "Engine cooling system" in the "Do-it-yourself" section of this manual.)

NOTE: Mixing any other type of coolant or the use of non-distilled water may reduce the recommended service interval of the coolant.

Engine oil and oil filter: Replace engine oil and oil filter at the specified intervals. For recommended oil grade and viscosity refer to "Recommended fluids/lubricants and capacities" in the "Technical and consumer information" section of this manual.

Engine valve clearance*: Inspect only if valve noise increase. Adjust valve clearance if necessary.

Evaporative emissions control vapor lines*: Check vapor lines for leaks or looseness. Tighten connections or replace parts as necessary.

Fuel lines*: Check the fuel hoses, piping and connections for leaks, looseness, or deterioration. Tighten connections or replace parts as necessary.

Spark plugs: Replace at specified intervals. Install new plugs of the same type as originally equipped.

CHASSIS AND BODY MAINTENANCE:

Brake lines and cables: Visually inspect for proper installation. Check for chafing, cracks, deterioration, and signs of leaking. Replace any deteriorated or damaged parts immediately.

Brake pads, rotors, drums and linings: Check for wear, deterioration and fluid leaks. Replace any deteriorated or damaged parts immediately.

Exhaust system: Visually inspect the exhaust pipes, muffler and hangers for leaks, cracks, deterioration, and damage. Tighten connections or replace parts as necessary.

In-cabin microfilter: Replace at specified intervals. When driving for prolonged periods in dusty conditions, replace the filter more frequently.

Propeller shaft(s): Check for damage, looseness, and grease leakage.

Steering gear and linkage, axle and suspension parts, drive shaft boots: Check for damage, looseness, and leakage of oil or grease. Under severe driving conditions, inspect more frequently.

Tire rotation: Tires should be rotated every 5,000 miles (8,000 km) according to the instructions under "Explanation of general maintenance items" in this section. When rotating tires, check for damage and uneven wear. Replace if necessary.

Transmission fluid/oil, differential oil: Visually inspect for signs of leakage at specified intervals.

If towing a trailer, using a camper or car-top carrier, or driving on rough or muddy roads, replace the CVT fluid every 60,000 miles (96,000 km) or request the dealer to inspect the fluid deterioration data using a CONSULT. If the deterioration data is more than 210000, replace the CVT fluid.

MAINTENANCE SCHEDULES

To help ensure smooth, safe and economical driving, NISSAN provides two maintenance schedules that may be used, depending upon the conditions in which you usually drive. These schedules contain both distance and time intervals, up to 120,000 miles (192,000 km)/144 months. For most people, the odometer reading will indicate when service is needed. However, if you drive very little, your vehicle should be serviced at the regular time intervals shown in the schedule.

After 120,000 miles (192,000 km)/144 months, continue maintenance at the same mileage/time intervals.

ADDITIONAL MAINTENANCE ITEMS FOR SEVERE OPERATING CONDITIONS

Additional maintenance items for severe operating conditions should be performed on vehicles that are driven under especially demanding conditions. Additional maintenance items should be performed if you primarily operate your vehicle under the following conditions:

- Repeated short trips of less than 5 miles (8 km).
- Repeated short trips of less than 10 miles (16 km) with outside temperatures remaining below freezing.
- Operating in hot weather in stop-an-go “rush hour” traffic.
- Extensive idling and/or low speed driving for long distances, such as police, taxi or door-to-door delivery use.
- Driving in dusty conditions.
- Driving on rough, muddy or salt spread roads.
- Towing a trailer, using a camper or using a car-top carrier.

NOTE:

For vehicles operated in Canada, both standard and severe maintenance items should be performed at every interval.

STANDARD MAINTENANCE

The following tables show the standard maintenance schedule. Depending upon weather and atmospheric conditions, varying road surfaces, individual driving habits and vehicle usage, additional or more frequent maintenance may be required. **After 120,000 miles (192,000 km)/144 months, continue maintenance at the same mileage/time interval.**

EMISSION CONTROL SYSTEM MAINTENANCE

Abbreviations: I = Inspect and correct or replace as necessary, R = Replace

MAINTENANCE OPERATION Perform at number of miles, kilometers or months, whichever comes first.	miles x 1,000 (km x 1,000) Months	MAINTENANCE INTERVAL											
		5 (8) 6	10 (16) 12	15 (24) 18	20 (32) 24	25 (40) 30	30 (48) 36	35 (56) 42	40 (64) 48	45 (72) 54	50 (80) 60	55 (88) 66	60 (96) 72
Drive belts	See NOTE (1)								I*		I*		I*
Air cleaner filter	See NOTE (2)						R						R
EVAP vapor lines					I*				I*				I*
Fuel lines					I*				I*				I*
Fuel filter	See NOTE (3)												
Engine coolant*	See NOTE (4)(5)												
Engine oil		Replace every 5,000 miles (8,000 km) or 6 months											
Engine oil filter		Replace every 5,000 miles (8,000 km) or 6 months											
Spark plugs	See NOTE (6)	Replace every 105,000 miles (168,000 km)											
Intake and exhaust valve clearances*	See NOTE (7)												

MAINTENANCE OPERATION Perform at number of miles, kilometers or months, whichever comes first.	miles x 1,000 (km x 1,000) Months	MAINTENANCE INTERVAL											
		65 (104) 78	70 (112) 84	75 (120) 90	80 (128) 96	85 (136) 102	90 (144) 108	95 (152) 114	100 (160) 120	105 (168) 126	110 (176) 132	115 (184) 138	120 (192) 144
Drive belts	See NOTE (1)		I*		I*		I*		I*		I*		I*
Air cleaner filter	See NOTE (2)						R						R
EVAP vapor lines					I*				I*				I*
Fuel lines					I*				I*				I*
Fuel filter	See NOTE (3)												
Engine coolant*	See NOTE (4)(5)												
Engine oil		Replace every 5,000 miles (8,000 km) or 6 months											
Engine oil filter		Replace every 5,000 miles (8,000 km) or 6 months											
Spark plugs	See NOTE (6)	Replace every 105,000 miles (168,000 km)											
Intake and exhaust valve clearances*	See NOTE (7)												

NOTE:

(1) After 40,000 miles (64,000 km) or 48 months, inspect every 10,000 miles (16,000 km) or 12 months. Replace the drive belts if found damaged.
(2) If operating mainly in dusty conditions, more frequent maintenance may be required.
(3) Periodic maintenance is not required.
(4) First replacement interval is 105,000 miles (168,000 km) or 84 months. After first replacement, replace every 75,000 miles (120,000 km) or 60 months.
(5) Use only Genuine NISSAN Long Life Antifreeze/Coolant (blue) or equivalent with proper mixture ration of 50% antifreeze and 50% demineralized or distilled water. Mixing any other type of coolant or the use of non-distilled water may reduce the life expectancy of the factory fill coolant.
(6) Replace spark plug when the plug gap exceeds 0.053 in (1.35 mm) even if within specified periodic replacement mileage.
(7) Periodic maintenance is not required. However, if valve noise increased, inspect valve clearance.

*** Maintenance items and intervals with "*" are recommended by NISSAN for reliable vehicle operation. The owner need not perform such maintenance in order to maintain the emission warranty or manufacturer recall liability. Other maintenance items and intervals are required.**

CHASSIS & BODY MAINTENANCE

Abbreviations: I = Inspect and correct or replace as necessary, R = Replace,

MAINTENANCE OPERATION Perform at number of miles, kilometers or months, whichever comes first.	miles x 1,000 (km x 1,000) Months	MAINTENANCE INTERVAL											
		5 (8) 6	10 (16) 12	15 (24) 18	20 (32) 24	25 (40) 30	30 (48) 36	35 (56) 42	40 (64) 48	45 (72) 54	50 (80) 60	55 (88) 66	60 (96) 72
Brake lines & cables			I		I		I		I		I		I
Brake pads & rotors★			I		I		I		I		I		I
Brake fluid★					R				R				R
CVT fluid	See NOTE (1)		I		I		I		I		I		I
Transfer fluid & differential gear oil	See NOTE (2)		I		I		I		I		I		I
Steering gear and linkage, axle and suspension parts★					I				I				I
Tire rotation	See NOTE (3)												
Propeller shaft & drive shaft boots (4WD models)★			I		I		I		I		I		I
Exhaust system★					I				I				I
In-cabin microfilter				R			R			R			R
Intelligent key battery				R			R			R			R

MAINTENANCE OPERATION Perform at number of miles, kilometers or months, whichever comes first.	miles x 1,000 (km x 1,000) Months	MAINTENANCE INTERVAL											
		65 (104) 78	70 (112) 84	75 (120) 90	80 (128) 96	85 (136) 102	90 (144) 108	95 (152) 114	100 (160) 120	105 (168) 126	110 (176) 132	115 (184) 138	120 (192) 144
Brake lines and cables			I		I		I		I		I		I
Brake pads and rotors★			I		I		I		I		I		I
Brake fluid★					R				R				R
CVT fluid	See NOTE (1)		I		I		I		I		I		I
Transfer fluid & differential gear oil	See NOTE (2)		I		I		I		I		I		I
Steering gear and linkage, axle and suspension parts★					I				I				I
Tire rotation	See NOTE (3)												
Propeller shaft & drive shaft boots (4WD models)★			I		I		I		I		I		I
Exhaust system★					I				I				I
In-cabin microfilter				R			R			R			R
Intelligent key battery				R			R			R			R

NOTE:

Maintenance items with "★" should be performed more frequently according to "Maintenance under severe driving conditions".
(1) If towing a trailer, using a camper or a car-top carrier or driving on rough or muddy roads, inspect CVT fluid deterioration at NISSAN dealers every 60,000 miles (96,000 km), then change CVT fluid if necessary. And if the inspection is not performed, change (not just inspect) CVT fluid every 60,000 miles (96,000 km).
(2) If towing a trailer, using a camper or a car-top, or driving on rough or muddy roads, change (not just inspect) oil at every 20,000 miles (32,000 km) or 24 months.
(3) For additional information on tire rotation, refer to "General maintenance" in this section.

MAINTENANCE UNDER SEVERE OPERATING CONDITIONS

The maintenance intervals shown on the preceding pages are for normal operating conditions. If the vehicle is mainly operated under severe driving conditions as shown below, more frequent maintenance must be performed on the following items as shown in the table.

SEVERE DRIVING CONDITIONS

- Repeated short trips of less than 5 miles (8 km).
- Repeated short trips of less than 10 miles (16 km) with outside temperatures remaining below freezing.
- Operating in hot weather in stop-and-go "rush hour" traffic.
- Extensive idling and/or low speed driving for long distance, such as police, taxi or door-to-door delivery use.
- Driving in dusty conditions.
- Driving on rough, muddy or salt spread roads.
- Towing a trailer, using a camper or using a car-top carrier.

Maintenance operation: Inspect = Inspect and correct or replace as necessary.

Maintenance item	Maintenance operation	Maintenance interval
Brake fluid	Replace	Every 10,000 miles (16,000 km) or 12 months
Brake pads & rotors	Inspect	Every 5,000 miles (8,000 km) or 6 months
Steering gear & linkage, axle & suspension parts	Inspect	Every 5,000 miles (8,000 km) or 6 months
Propeller shaft & drive shaft boots (4WD models)	Inspect	Every 5,000 miles (8,000 km) or 6 months
Exhaust system	Inspect	Every 5,000 miles (8,000 km) or 6 months

5,000 Miles (8,000 km) or 6 Months Dealer Name: Date: Mileage: Dealer Stamp:	**10,000 Miles (16,000 km) or 12 Months** Dealer Name: Date: Mileage: Dealer Stamp:	**15,000 Miles (24,000 km) or 18 Months** Dealer Name: Date: Mileage: Dealer Stamp:
20,000 Miles (32,000 km) or 24 Months Dealer Name: Date: Mileage: Dealer Stamp:	**25,000 Miles (40,000 km) or 30 Months** Dealer Name: Date: Mileage: Dealer Stamp:	**30,000 Miles (48,000 km) or 36 Months** Dealer Name: Date: Mileage: Dealer Stamp:
35,000 Miles (56,000 km) or 42 Months Dealer Name: Date: Mileage: Dealer Stamp:	**40,000 Miles (64,000 km) or 48 Months** Dealer Name: Date: Mileage: Dealer Stamp:	**45,000 Miles (72,000 km) or 54 Months** Dealer Name: Date: Mileage: Dealer Stamp:

50,000 Miles (80,000 km) or 60 Months Dealer Name: Date: Mileage: Dealer Stamp:	**55,000 Miles (88,000 km) or 66 Months** Dealer Name: Date: Mileage: Dealer Stamp:	**60,000 Miles (96,000 km) or 72 Months** Dealer Name: Date: Mileage: Dealer Stamp:
65,000 Miles (104,000 km) or 78 Months Dealer Name: Date: Mileage: Dealer Stamp:	**70,000 Miles (112,000 km) or 84 Months** Dealer Name: Date: Mileage: Dealer Stamp:	**75,000 Miles (120,000 km) or 90 Months** Dealer Name: Date: Mileage: Dealer Stamp:
80,000 Miles (128,000 km) or 96 Months Dealer Name: Date: Mileage: Dealer Stamp:	**85,000 Miles (136,000 km) or 102 Months** Dealer Name: Date: Mileage: Dealer Stamp:	**90,000 Miles (144,000 km) or 108 Months** Dealer Name: Date: Mileage: Dealer Stamp:

95,000 Miles (152,000 km) or 114 Months Dealer Name: Date: Mileage: Dealer Stamp:	**100,000 Miles (160,000 km) or 120 Months** Dealer Name: Date: Mileage: Dealer Stamp:	**105,000 Miles (168,000 km) or 126 Months** Dealer Name: Date: Mileage: Dealer Stamp:
110,000 Miles (176,000 km) or 132 Months Dealer Name: Date: Mileage: Dealer Stamp:	**115,000 Miles (184,000 km) or 138 Months** Dealer Name: Date: Mileage: Dealer Stamp:	**120,000 Miles (192,000 km) or 144 Months** Dealer Name: Date: Mileage: Dealer Stamp:

MEMO

10 Technical and consumer information

Recommended fluids/lubricants and capacities 10-2
Fuel recommendation 10-4
Engine oil and oil filter recommendations 10-6
Air conditioner system refrigerant and oil recommendations 10-7
Specifications 10-8
Engine 10-8
Wheels and tires 10-9
Dimensions and weights 10-9
When traveling or registering in another country 10-10
Vehicle identification 10-10
Vehicle identification number (VIN) plate 10-10
Vehicle identification number (chassis number) 10-10
Engine serial number 10-11
F.M.V.S.S./C.M.V.S.S. certification label 10-11
Emission control information label 10-11
Tire and loading information label 10-12
Air conditioner specification label 10-12
Installing front license plate 10-12
Vehicle loading information 10-13
Terms 10-13
Vehicle load capacity 10-14
Securing the load 10-15
Loading tips 10-16
Measurement of weights 10-16
Towing a trailer 10-17
Maximum load limits 10-17
Towing load/specification 10-20
Towing safety 10-21
Flat towing for 4–Wheel drive vehicle (if so equipped) 10-28
Flat towing for front wheel drive vehicle (if so equipped) 10-28
Uniform tire quality grading 10-29
Emission control system warranty 10-30
Reporting safety defects 10-30
Readiness for inspection/maintenance (I/M) test 10-31
Event Data Recorders (EDR) 10-32
Owner's Manual/Service Manual order information . . 10-32

RECOMMENDED FLUIDS/ LUBRICANTS AND CAPACITIES

The following are approximate capacities. The actual refill capacities may be slightly different. When refilling, follow the procedure described in the "Do-it-yourself" section to determine the proper refill capacity.

Fluid type		Capacity (approximate)			Recommended Fluids/Lubricants
		Metric Measure	US Measure	Imperial Measure	
Fuel		74 L	19-1/2 gal	16-1/4 gal	▪ For additional information, refer to "Fuel Recommendation" in this section.
Engine oil* Drain and refill * For additional information, refer to "Engine oil" in the "Do-it-yourself" section of this manual.	With oil filter change	4.8 L	5-1/8 qt	4-1/4 qt	▪ Genuine "NISSAN Motor Oil 0W-20 SN" is recommended. ▪ If the above motor oil is not available, use an equivalent motor oil that matches the above grade and viscosity. For additional information, refer to "Engine oil and oil filter recommendations" in this section.
	Without oil filter change	4.5 L	4-3/4 qt	4 qt	
Engine coolant with reservoir		9.8 L	2-5/8 gal	2-1/8 gal	▪ Pre-diluted Genuine NISSAN Long Life Antifreeze/Coolant (blue) or equivalent
Continuously Variable Transmission (CVT) fluid		—	—	—	▪ Genuine NISSAN CVT Fluid NS-3 ▪ NISSAN recommends using Genuine NISSAN CVT Fluid NS-3 (or equivalent) ONLY in NISSAN CVTs. Do not mix with other fluids. Using fluids that are not equivalent to Genuine NISSAN CVT Fluid NS-3 may damage the CVT. Damage caused by the use of fluids other than as recommended is not covered under NISSAN's New Vehicle Limited Warranty.
Differential gear oil		—	—	—	▪ Genuine NISSAN Differential Oil Hypoid Super Semi-synthetic API GL-5, Viscosity SAE 75W-90 ▪ The use of differential gear oil other than the specified may cause vehicle malfunctions and result in non-warranty vehicle repairs.
Transfer fluid		—	—	—	▪ Genuine NISSAN Differential Oil Hypoid super GL-5 80W-90 or equivalent conventional (non-synthetic) oil

Fluid type	Capacity (approximate)			Recommended Fluids/Lubricants
	Metric Measure	US Measure	Imperial Measure	
Power steering fluid (PSF)	—	—	—	▪ Genuine NISSAN E-PSF or equivalent. ▪ Use of power steering fluid other than Genuine NISSAN E-PSF will prevent the power steering system from operating properly.
Brake fluid	—	—	—	▪ Genuine NISSAN Super Heavy Duty Brake Fluid or equivalent DOT 3 ▪ Available in mainland U.S.A. through a NISSAN dealer
Multi-purpose grease	—	—	—	▪ NLGI No. 2 (Lithium Soap base)
Windshield-washer fluid	5 L	1-3/8 gal	1-1/8 gal	▪ Genuine NISSAN Windshield Washer Concentrate Cleaner & Anti-freeze fluid or equivalent
Air conditioning system refrigerant	—	—	—	▪ HFC-134a (R-134a) ▪ For additional information, refer to “Air conditioner system refrigerant and oil recommendations” in this section.
Air conditioning system oil	—	—	—	▪ Genuine NISSAN A/C System Oil Type S (DH-PS) or equivalent ▪ For additional information, refer to “Air conditioner system refrigerant and oil recommendations” in this section.

FUEL RECOMMENDATION

Use unleaded regular gasoline with an octane rating of at least 87 AKI (Anti-Knock Index) number (Research octane number 91).

⚠ CAUTION

- **Using a fuel other than that specified could adversely affect the emission control system, and may also affect the warranty coverage.**
- **Under no circumstances should a leaded gasoline be used, because this will damage the three-way catalyst.**
- **Do not use E-15 or E-85 fuel in your vehicle. Your vehicle is not designed to run on E-15 or E-85 fuel. Using E-15 or E-85 fuel in a vehicle not specifically designed for E-15 or E-85 fuel can adversely affect the emission control devices and systems of the vehicle. Damage caused by such fuel is not covered by the NISSAN New Vehicle Limited Warranty.**
- **Do not use fuel that contains the octane booster methylcyclopentadienyl manganese tricarbonyl (MMT). Using fuel containing MMT may adversely affect vehicle performance and vehicle emissions. Not all fuel dispensers are labeled to indicate MMT content, so you may have to consult your gasoline retailer for more details. Note that Federal and California laws prohibit the use of MMT in reformulated gasoline.**
- **U.S. government regulations require ethanol dispensing pumps to be identified by a small, square, orange and black label with the common abbreviation or the appropriate percentage for that region.**

Gasoline specifications

NISSAN recommends using gasoline that meets the World-Wide Fuel Charter (WWFC) specifications where it is available. Many of the automobile manufacturers developed this specification to improve emission control system and vehicle performance. Ask your service station manager if the gasoline meets the WWFC specifications.

Reformulated gasoline

Some fuel suppliers are now producing reformulated gasolines. These gasolines are specially designed to reduce vehicle emissions. NISSAN supports efforts towards cleaner air and suggests that you use reformulated gasoline when available.

Gasoline containing oxygenates

Some fuel suppliers sell gasoline containing oxygenates such as ethanol, Methyl Tert-butyl Ether (MTBE) and methanol with or without advertising their presence. NISSAN does not recommend the use of fuels of which the oxygenate content and the fuel compatibility for your NISSAN cannot be readily determined. If in doubt, ask your service station manager.

If you use oxygenate-blend gasoline, please take the following precautions as the usage of such fuels may cause vehicle performance problems and/or fuel system damage.

- **The fuel should be unleaded and have an octane rating no lower than that recommended for unleaded gasoline.**

- **If an oxygenate-blend other than methanol blend is used, it should contain no more than 10% oxygenate. (MTBE may, however, be added up to 15%.)**
- **E-15 fuel contains more than 10% oxygenate. E-15 fuel will adversely affect the emission control devices and systems of the vehicle and should not be used. Damage caused by such fuel is not covered by the NISSAN New Vehicle Limited Warranty.**
- **If a methanol blend is used, it should contain no more than 5% methanol (methyl alcohol, wood alcohol). It should also contain a suitable amount of appropriate cosolvents and corrosion inhibitors. If not properly formulated with appropriate cosolvents and corrosion inhibitors, such methanol blends may cause fuel system damage and/or vehicle performance problems. At this time, sufficient data is not available to ensure that all methanol blends are suitable for use in NISSAN vehicles.**

If any driveability problems such as engine stalling and difficult hot-starting are experienced after using oxygenate-blend fuels, immediately change to a non-oxygenate fuel or a fuel with a low blend of MTBE.

Take care not to spill gasoline during refueling. Gasoline containing oxygenates can cause paint damage.

E–15 fuel

E-15 fuel is a mixture of approximately 15% fuel ethanol and 85% unleaded gasoline. E-15 can only be used in vehicles designed to run on E-15 fuel. Do not use E-15 in your vehicle. U.S. government regulations require fuel ethanol dispensing pumps to be identified with small, square, orange and black label with the common abbreviation or the appropriate percentage for that region.

E–85 fuel

E-85 fuel is a mixture of approximately 85% fuel ethanol and 15% unleaded gasoline. E-85 can only be used in a Flexible Fuel Vehicle (FFV). Do not use E-85 in your vehicle. U.S. government regulations require fuel ethanol dispensing pumps to be identified by a small, square, orange and black label with the common abbreviation or the appropriate percentage for that region.

Fuel containing MMT

MMT, or methylcyclopentadienyl manganese tricarbonyl, is an octane boosting additive. NISSAN does not recommend the use of fuel containing MMT. Such fuel may adversely affect vehicle performance, including the emissions control system. Note that while some fuel pumps label MMT content, not all do, so you may have to consult your gasoline retailer for more details.

Aftermarket fuel additives

NISSAN does not recommend the use of any aftermarket fuel additives (for example, fuel injector cleaner, octane booster, intake valve deposit removers, etc.) which are sold commercially. Many of these additives intended for gum, varnish or deposit removal may contain active solvents or similar ingredients that can be harmful to the fuel system and engine.

Octane rating tips

Using unleaded gasoline with an octane rating lower than recommended can cause persistent, heavy “spark knock.” (“Spark knock” is a metallic rapping noise.) If severe, this can lead to engine damage. If you detect a persistent heavy spark knock even when using gasoline of the stated octane rating, or if you hear steady spark knock while holding a steady speed on level

roads, it is recommended that you have a NISSAN dealer correct the condition. Failure to correct the condition is misuse of the vehicle, for which NISSAN is not responsible.

Incorrect ignition timing may result in spark knock, after-run and/or overheating, which may cause excessive fuel consumption or engine damage. If any of the above symptoms are encountered, have your vehicle checked. It is recommended that you visit a NISSAN dealer for servicing.

However, now and then you may notice light spark knock for a short time while accelerating or driving up hills. This is not a cause for concern, because you get the greatest fuel benefit when there is light spark knock for a short time under heavy engine load.

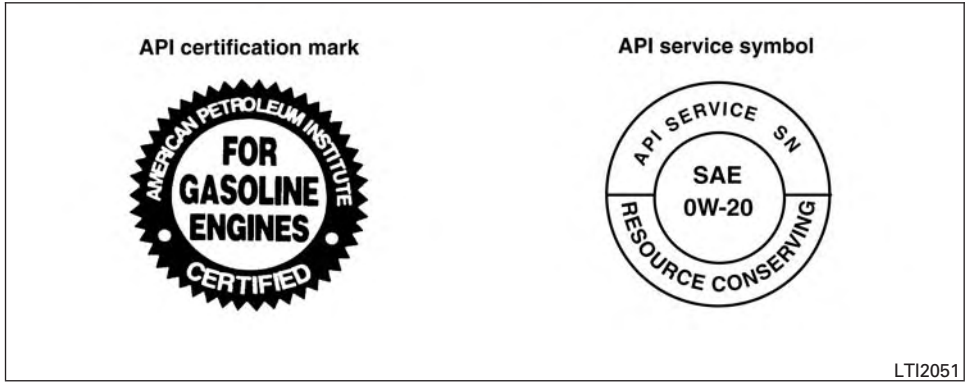

ENGINE OIL AND OIL FILTER RECOMMENDATIONS

Selecting the correct oil

It is essential to choose the correct grade, quality and viscosity engine oil to ensure satisfactory engine life and performance. For additional information, refer to “Recommended fluids/lubricants and capacities” in this section. NISSAN recommends the use of an energy conserving oil in order to improve fuel economy.

Select only engine oils that meet the American Petroleum Institute (API) certification or International Lubricant Standardization and Approval Committee (ILSAC) certification and SAE viscosity standard. These oils have the API certification mark on the front of the container. Oils which do not have the specified quality label should not be used as they could cause engine damage.

Oil additives

NISSAN does not recommend the use of oil additives. The use of an oil additive is not necessary when the proper oil type is used and maintenance intervals are followed.

Oil which may contain foreign matter or has been previously used should not be used.

Oil viscosity

The engine oil viscosity or thickness changes with temperature. Because of this, it is important to select the engine oil viscosity based on the temperatures at which the vehicle will be operated before the next oil change. Choosing an oil viscosity other than that recommended could cause serious engine damage.

Selecting the correct oil filter

Your new NISSAN vehicle is equipped with a high-quality Genuine NISSAN oil filter. When replacing, use a Genuine NISSAN oil filter or its equivalent for the reason described in “Change intervals.”

Change intervals

The oil and oil filter change intervals for your engine are based on the use of the specified quality oils and filters. Using engine oil and filters that are not of the specified quality, or exceeding recommended oil and filter change intervals could reduce engine life. Damage to the engine caused by improper maintenance or use of incorrect oil and filter quality and/or viscosity is not covered by the NISSAN New Vehicle Limited Warranty.

Your engine was filled with a high-quality engine oil when it was built. You do not have to change the oil before the first recommended change interval. Oil and filter change intervals depend upon how you use your vehicle.

Operation under the following conditions may require more frequent oil and filter changes:

- repeated short distance driving at cold outside temperatures
- driving in dusty conditions
- extensive idling
- towing a trailer
- stop and go commuting

For additional information, refer to the “Maintenance and schedules” section of this manual.

AIR CONDITIONER SYSTEM REFRIGERANT AND OIL RECOMMENDATIONS

The air conditioner system in your NISSAN vehicle must be charged with the refrigerant HFC-134a (R-134a) and NISSAN A/C system oil Type S (DH-PS) or the exact equivalents.

⚠ CAUTION

The use of any other refrigerant or oil may cause severe damage to the air conditioning system and will require the replacement of all air conditioner system components.

The refrigerant HFC-134a (R-134a) in your NISSAN vehicle does not harm the earth’s ozone layer. Although this refrigerant does not affect the earth’s atmosphere, certain government regulations require the recovery and recycling of any refrigerant during automotive air conditioner system service. A NISSAN dealer has the trained technicians and equipment needed to recover and recycle your air conditioner system refrigerant.

It is recommended that you visit a NISSAN dealer when servicing your air conditioner system.

ENGINE

Model		VQ35DD
Type		Gasoline, 4-cycle, DOHC
Cylinder arrangement		6-cylinder, V-block, Slanted at 60°
Bore x Stroke	in (mm)	3.780 x 3.189 (96 x 81)
Displacement	cu in (cm^3)	213.45 (3,498)
Firing order		1–2–3–4–5–6
Idle speed		No adjustment is necessary.
CVT in N (Neutral) position		
Ignition timing (degree B.T.D.C. at idle speed)		
CO % at idle		
Spark plug		FXE22HR-11
Spark plug gap (Nominal)	in (mm)	0.043 (1.1)
Camshaft operation		Timing chain

This spark ignition system complies with the Canadian standard ICES-002.

WHEELS AND TIRES

Wheels	Offset in (mm)	Size
Alloy	1.97 (50)	18 x 7.5J
	1.97 (50)	20 x 7.5J
Tires		**Size**
All Season		235/65R18
		235/55R20
Spare tire	**Wheel size**	**Tire size**
Temporary spare - steel	18 x 4T	T165/90D18

DIMENSIONS AND WEIGHTS

Overall length	in (mm)	198.5 (5,042)
Overall width	in (mm)	77.2 (1,960)
Overall height		
without roof rack	in (mm)	69.6 (1,767.5)
with roof rack	in (mm)	70.2 (1,783.4)
Front and Rear Track	in (mm)	65.7 (1,670)
Wheelbase	in (mm)	114.2 (2,900)
Gross vehicle weight rating	lb (kg)	Refer to the “F.M.V.S.S./C.M.V.S.S. certification label” on the center pillar between the driver’s side front and rear doors.
Gross axle weight rating		
Front	lb (kg)	
Rear	lb (kg)	

WHEN TRAVELING OR REGISTERING IN ANOTHER COUNTRY

When planning to drive your NISSAN vehicle in another country, you should first find out if the fuel available is suitable for your vehicle's engine.

Using fuel with an octane rating that is too low may cause engine damage. All gasoline vehicles must be operated with unleaded gasoline. Therefore, avoid taking your vehicle to areas where appropriate fuel is not available.

When transferring the registration of your vehicle to another country, state, province or district, it may be necessary to modify the vehicle to meet local laws and regulations.

The laws and regulations for motor vehicle emission control and safety standards vary according to the country, state, province or district; therefore, vehicle specifications may differ.

When any vehicle is to be taken into another country, state, province or district and registered, its modifications, transportation and registration are the responsibility of the user. NISSAN is not responsible for any inconvenience that may result.

VEHICLE IDENTIFICATION

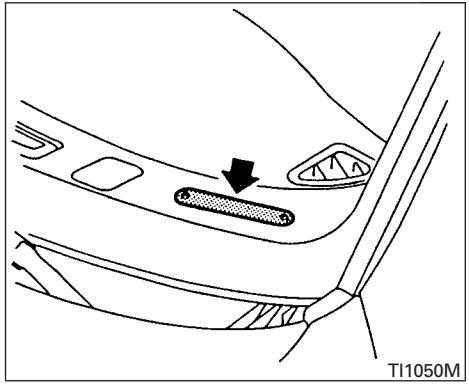

VEHICLE IDENTIFICATION NUMBER (VIN) PLATE

The VIN plate is located as shown. This number is the identification for your vehicle and is used in the vehicle registration.

The VIN number is also available through the center display screen. For additional information, refer to your "Navigation System Owner's Manual".

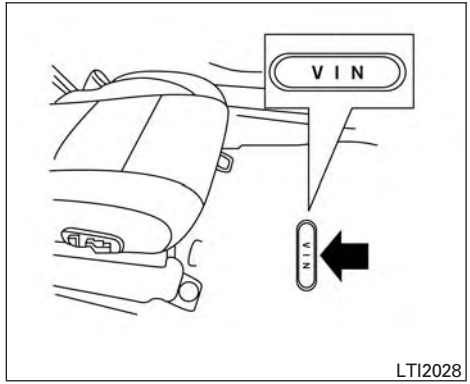

VEHICLE IDENTIFICATION NUMBER (chassis number)

The vehicle identification number is located as shown.

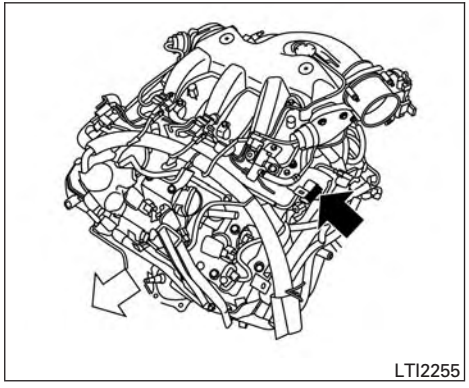

ENGINE SERIAL NUMBER

The number is stamped on the engine as shown.

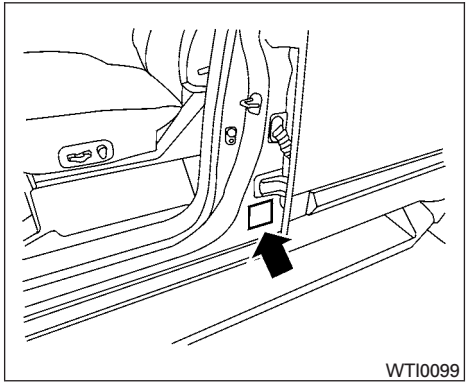

F.M.V.S.S./C.M.V.S.S. CERTIFICATION LABEL

The Federal/Canadian Motor Vehicle Safety Standard (F.M.V.S.S./C.M.V.S.S.) certification label is affixed as shown. This label contains valuable vehicle information, such as: (GVWR), (GAWR), month and year of manufacture, (VIN), etc. Review it carefully.

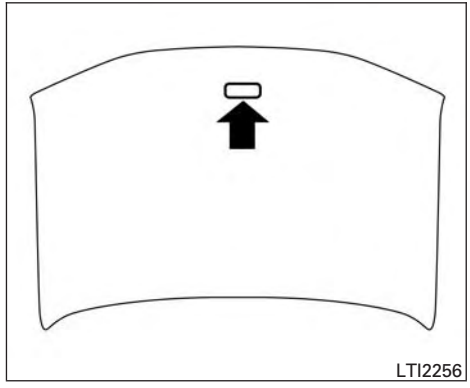

EMISSION CONTROL INFORMATION LABEL

The emission control information label is attached to the underside of the hood as shown.

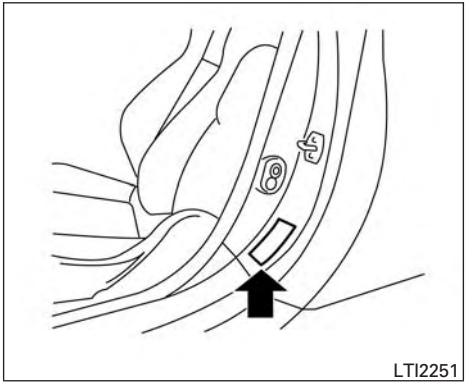

TIRE AND LOADING INFORMATION LABEL

The cold tire pressure is shown on the Tire and Loading Information label. The label is located as shown.

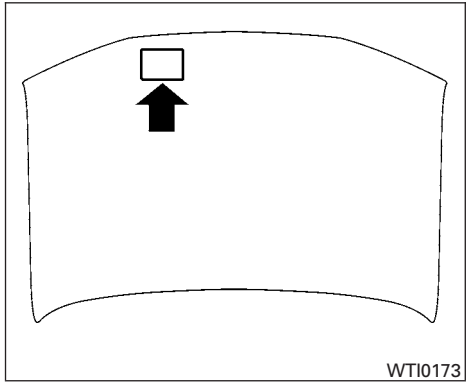

AIR CONDITIONER SPECIFICATION LABEL

The air conditioner specification label is affixed to the underside of the hood as shown.

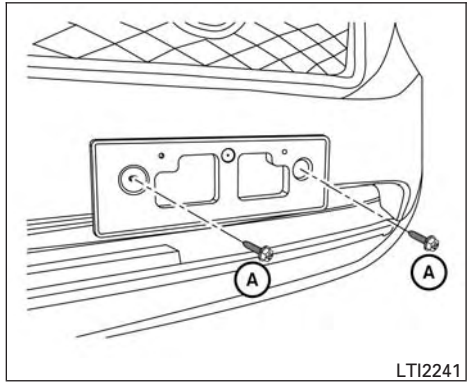

To mount the front license plate, attach the license plate bracket to the bumper fascia at the location marks (small dimples) using the two provided screws Ⓐ.

⚠WARNING

- **It is extremely dangerous to ride in a cargo area inside a vehicle. In a collision, people riding in these areas are more likely to be seriously injured or killed.**
- **Do not allow people to ride in any area of your vehicle that is not equipped with seats and seat belts.**
- **Be sure everyone in your vehicle is in a seat and using a seat belt properly.**

TERMS

It is important to familiarize yourself with the following terms before loading your vehicle:

- Curb Weight (actual weight of your vehicle) - vehicle weight including: standard and optional equipment, fluids, emergency tools, and spare tire assembly. This weight **does not** include passengers and cargo.
- GVW (Gross Vehicle Weight) - curb weight plus the combined weight of passengers and cargo.
- GVWR (Gross Vehicle Weight Rating) - maximum total combined weight of the unloaded vehicle, passengers, luggage, hitch, trailer tongue load and any other optional equipment. This information is located on the F.M.V.S.S./C.M.V.S.S. certification label.
- GAWR (Gross Axle Weight Rating) - maximum weight (load) limit specified for the front or rear axle. This information is located on the F.M.V.S.S./C.M.V.S.S. certification label.
- GCWR (Gross Combined Weight rating) - The maximum total weight rating of the vehicle, passengers, cargo, and trailer.
- Vehicle Capacity Weight, Load limit, Total load capacity - maximum total weight limit specified of the load (passengers and cargo) for the vehicle. This is the maximum combined weight of occupants and cargo that can be loaded into the vehicle. If the vehicle is used to tow a trailer, the trailer tongue weight must be included as part of the cargo load. This information is located on the Tire and Loading Information label.
- Cargo capacity - permissible weight of cargo, the subtracted weight of occupants from the load limit.

VEHICLE LOAD CAPACITY

Do not exceed the load limit of your vehicle shown as “The combined weight of occupants and cargo” on the Tire and Loading Information label. Do not exceed the number of occupants shown as “Seating Capacity” on the Tire and Loading Information label.

To get “the combined weight of occupants and cargo”, add the weight of all occupants, then add the total luggage weight. Examples are shown in the following illustration.

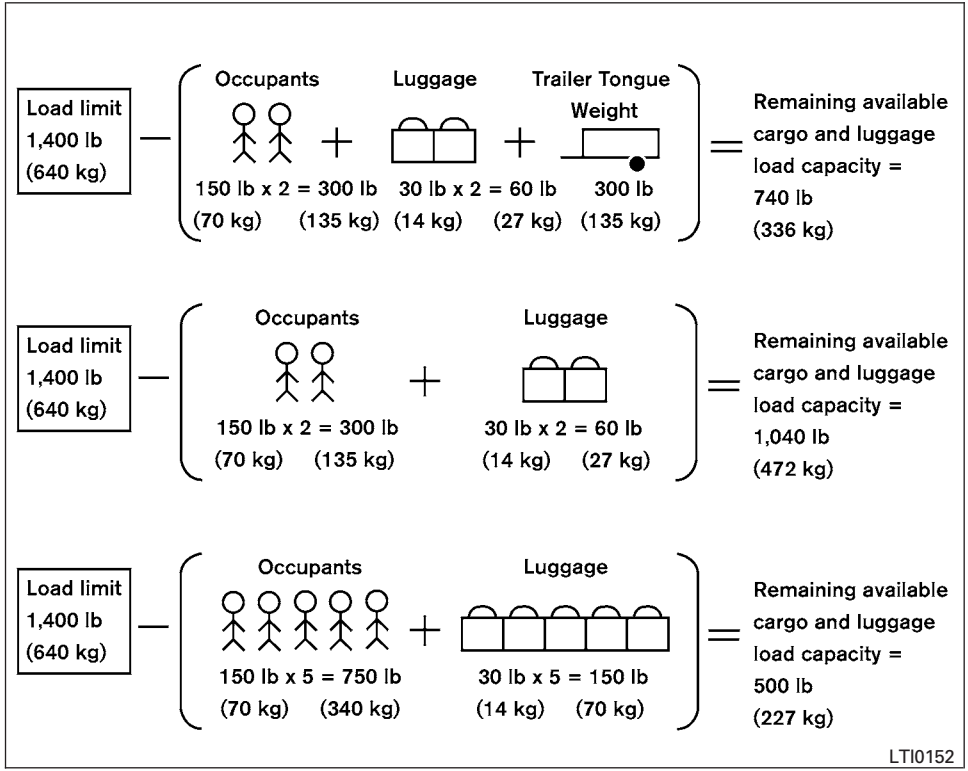

Example

Steps for determining correct load limit

1. Locate the statement “The combined weight of occupants and cargo should never exceed XXX lbs or XXX kg” on your vehicle’s placard.
2. Determine the combined weight of the driver and passengers that will be riding in your vehicle.
3. Subtract the combined weight of the driver and passengers from XXX lbs or XXX kg.
4. The resulting figure equals the available amount of cargo and luggage load capacity. For example, if the XXX amount equals 1,400 lbs. and there will be five 150 lb. passengers in your vehicle, the amount of available cargo and luggage load capacity is 650 lbs. (1,400-750 (5 X 150) = 650 lbs) or (640-340 (5 X 70) = 300 kg.)
5. Determine the combined weight of luggage and cargo being loaded on the vehicle. That weight may not safely exceed the available cargo and luggage load capacity calculated in step 4.
6. If your vehicle will be towing a trailer, load from your trailer will be transferred to your vehicle. Consult this manual to determine how this reduces the available cargo and luggage load capacity of your vehicle.

Before driving a loaded vehicle, confirm that you do not exceed the Gross Vehicle Weight Rating (GVWR) or the Gross Axle Weight Rating (GAWR) for your vehicle. For additional information, refer to “Measurement of weights” in this section.

Also check tires for proper inflation pressures. For additional information, refer to the “Tire and loading information label” in this section.

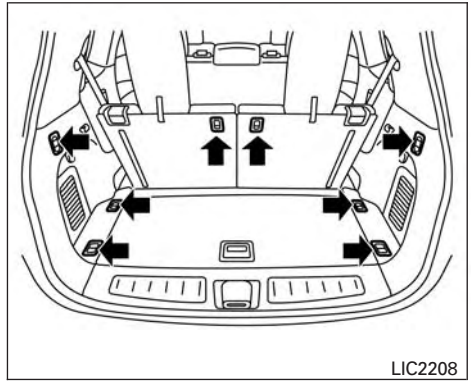

Cargo area luggage hooks

SECURING THE LOAD

There are luggage hooks located in the cargo area as shown. The hooks can be used to secure cargo with ropes or other types of straps.

Do not apply a total load of more than 6.5 lbs. (29 N) to a single metal floor hook when securing cargo.

⚠ WARNING

- **Properly secure all cargo with ropes or straps to help prevent it from sliding or shifting. Do not place cargo higher than the seatbacks. In a sudden stop or collision, unsecured cargo could cause personal injury.**
- **The child restraint top tether strap may be damaged by contact with items in the cargo area. Secure any items in the cargo area. Your child could be seriously injured or killed in a collision if the top tether strap is damaged.**
- **Do not load your vehicle any heavier than the GVWR or the maximum front and rear GAWRs. If you do, parts of your vehicle can break, tire damage could occur, or it can change the way your vehicle handles. This could result in loss of control and cause personal injury.**

LOADING TIPS

- The GVW must not exceed GVWR or GAWR as specified on the F.M.V.S.S./C.M.V.S.S. certification label.
- Do not load the front and rear axle to the GAWR. Doing so will exceed the GVWR.

⚠ WARNING

- **Properly secure all cargo with ropes or straps to help prevent it from sliding or shifting. Do not place cargo higher than the seatbacks. In a sudden stop or collision, unsecured cargo could cause personal injury.**
- **Do not load your vehicle any heavier than the GVWR or the maximum front and rear GAWRs. If you do, parts of your vehicle can break, tire damage could occur, or it can change the way your vehicle handles. This could result in loss of control and cause personal injury.**
- **Overloading not only can shorten the life of your vehicle and the tire, but can also cause unsafe vehicle handling and longer braking distances. This may cause a premature tire failure which could result in a serious accident and personal injury. Failures caused by overloading are not covered by the vehicle's warranty.**

MEASUREMENT OF WEIGHTS

Secure loose items to prevent weight shifts that could affect the balance of your vehicle. When the vehicle is loaded, drive to a scale and weigh the front and the rear wheels separately to determine axle loads. Individual axle loads should not exceed either of the gross axle weight ratings (GAWR). The total of the axle loads should not exceed the gross vehicle weight rating (GVWR). These ratings are given on the vehicle certification label. If weight ratings are exceeded, move or remove items to bring all weights below the ratings.

⚠ WARNING

Overloading or improper loading of a trailer and its cargo can adversely affect vehicle handling, braking and performance and may lead to accidents.

⚠ CAUTION

- **Do not tow a trailer or haul a heavy load for the first 500 miles (805 km). Your engine, axle or other parts could be damaged.**
- **For the first 500 miles (805 km) that you tow a trailer, do not drive over 50 mph (80 km/h) and do not make starts at full throttle. This helps the engine and other parts of your vehicle wear in at the heavier loads.**

Your new vehicle was designed to be used primarily to carry passengers and cargo. Remember that towing a trailer places additional loads on your vehicle's engine, drive train, steering, braking and other systems.

A NISSAN Towing Guide (U.S. only) is available on the website at *www.nissanusa.com.* This guide includes information on trailer towing capability and the special equipment required for proper towing.

MAXIMUM LOAD LIMITS

Maximum trailer loads

Never allow the total trailer load to exceed the value specified in the following Towing Load/Specification Chart found in this section. The total trailer load equals trailer weight plus its cargo weight.

- **When towing a trailer load of 3,500 lbs. (1,587 kg) or more, trailers with a brake system MUST be used.**

The maximum Gross Combined Weight Rating (GCWR) should not exceed the value specified in the following Towing Load/Specification Chart.

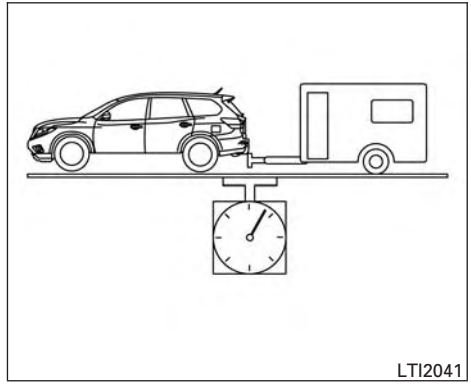

The GCWR equals the combined weight of the towing vehicle (including passengers and cargo) plus the total trailer load. Towing loads greater than these or using improper towing equipment could adversely affect vehicle handling, braking and performance.

The ability of your vehicle to tow a trailer is not only related to the maximum trailer loads, but also the places you plan to tow. Tow weights appropriate for level highway driving may have to be reduced for low traction situations (for example, on slippery boat ramps).

Temperature conditions can also affect towing. For example, towing a heavy trailer in high outside temperatures on graded roads can affect engine performance and cause overheating. The engine protection mode, which helps reduce the chance of engine damage, could activate and automatically decrease engine power. Vehicle speed may decrease under high load. Plan your trip carefully to account for trailer and vehicle load, weather and road conditions.

⚠ WARNING

Overheating can result in reduced engine power and vehicle speed. The reduced speed may be lower than other traffic, which could increase the chance of a collision. Be especially careful when driving. If the vehicle cannot maintain a safe driving speed, pull to the side of the road in a safe area. Allow the engine to cool and return to normal operation. For additional information, refer to "If your vehicle overheats" in the "In case of emergency" section of this manual.

⚠ CAUTION

Vehicle damage resulting from improper towing procedures is not covered by NISSAN warranties.

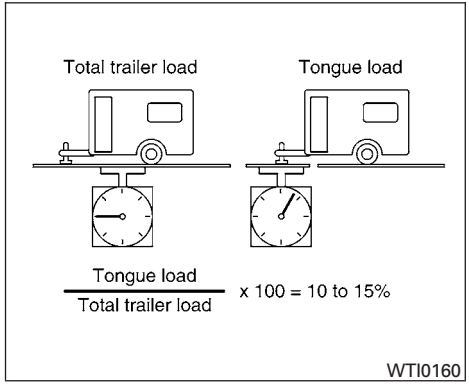

Tongue load

When using a weight carrying or a weight distributing hitch, keep the tongue load between 10 - 15% of the total trailer load or use the trailer tongue load specified by the trailer manufacturer. The tongue load must be within the maximum tongue load limits shown in the following "Towing Load/Specification" chart. If the tongue load becomes excessive, rearrange cargo to allow for proper tongue load.

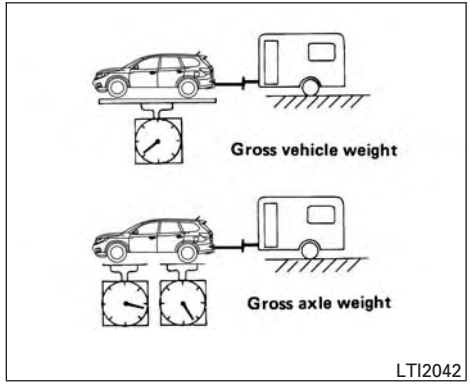

Maximum Gross Vehicle Weight (GVW)/Maximum Gross Axle Weight (GAW)

The GVW of the towing vehicle must not exceed the Gross Vehicle Weight Rating (GVWR) shown on the F.M.V.S.S./C.M.V.S.S. certification label. The GVW equals the combined weight of the unloaded vehicle, passengers, luggage, hitch, trailer tongue load and any other optional equipment. In addition, front or rear GAW must not exceed the Gross Axle Weight Rating (GAWR) shown on the F.M.V.S.S./C.M.V.S.S. certification label.

Towing capacities are calculated assuming a base vehicle with driver and any options required to achieve the rating. Additional passengers, cargo and/or optional equipment, such as the trailer hitch, will add weight to the vehicle and reduce your vehicle's maximum towing capacity and trailer tongue load.

The vehicle and trailer need to be weighed to confirm the vehicle is within the GVWR, Front GAWR, Rear GAWR, Gross Combined Weight Rating (GCWR) and Towing capacity.

All vehicle and trailer weights can be measured using platform type scales commonly found at truck stops, highway weigh stations, building supply centers or salvage yards.

To determine the available payload capacity for tongue/king pin load, use the following procedure.

1. Locate the GVWR on the F.M.V.S.S./C.M.V.S.S. certification label.
2. Weigh your vehicle on the scale with all of the passengers and cargo that are normally in the vehicle when towing a trailer.
3. Subtract the actual vehicle weight from the GVWR. The remaining amount is the available maximum tongue/king pin load.

To determine the available towing capacity, use the following procedure.

1. Find the GCWR for your vehicle on the "Towing Load/Specification" chart found in this section.
2. Subtract the actual vehicle weight from the GCWR. The remaining amount is the available maximum towing capacity.

To determine the Gross Trailer Weight, weigh your trailer on a scale with all equipment and cargo, that are normally in the trailer when it is towed. Make sure the Gross trailer weight is not more than the Gross Trailer Weight Rating shown on the trailer and is not more than the calculated available maximum towing capacity.

Also weigh the front and rear axles on the scale to make sure the Front Gross Axle Weight and Rear Gross Axle Weight are not more than Front Gross Axle Weight and Rear Gross Axle Weight on the F.M.V.S.S./C.M.V.S.S. certification label. The cargo in the trailer and vehicle may need to be moved or removed to meet the specified ratings.

Example:

- Gross Vehicle Weight (GVW) as weighed on a scale - including passengers, cargo and hitch - 6,350 lb. (2,880 kg).
- Gross Vehicle Weight Rating (GVWR) from F.M.V.S.S./C.M.V.S.S. certification label - 7,250 lb. (3,289 kg).
- Gross Combined Weight Rating (GCWR) from "Towing Load/Specification" chart - 15,100 lb. (6,849 kg).
- Maximum Trailer towing capacity from "Towing Load/Specification" chart - 9,100 lb. (4,128 kg).

7,250 lb. (3,289 kg)	GVWR
– 6,350 lb. (2,880 kg)	GVW
= 900 lb. (409 kg)	Available for tongue weight
15,100 lb. (6,849 kg)	GCWR
– 6,350 lb. (2,880 kg)	GVW
= 9,123 lb. (4,138 kg)	Capacity available for towing
900 lb. (409 kg)	Available tongue weight
/ 8,750 lb. (3,969 kg)	Available capacity
=	10% tongue weight

The available towing capacity may be less than the maximum towing capacity due to the passenger and cargo load in the vehicle.

Remember to keep trailer tongue weight between 10 - 15% of the trailer weight or within the trailer tongue load specification recommended by the trailer manufacturer. If the tongue load becomes excessive, rearrange the cargo to obtain the proper tongue load. Do not exceed the maximum tongue weight specification shown in the “Towing load/specification” chart even if the calculated available tongue weight is greater than 15%. If the calculated tongue weight is less than 10%, reduce the total trailer weight to match the available tongue weight.

Always verify that available capacities are within the required ratings.

TOWING LOAD/SPECIFICATION

TOWING LOAD/SPECIFICATION CHART	
	U.S. and Canada
Maximum Towing Capacity*1	6,000 lb. (2,721 kg)
Maximum Tongue Load	600 lb. (272 kg)
Maximum Gross Combined Weight Rating	11,000 lb. (4,990 kg)
*1: The towing capacity values are calculated assuming a base vehicle with driver and any options required to achieve the rating. Additional passengers, cargo and/or optional equipment will add weight to the vehicle and reduce your vehicle’s maximum towing capacity.	

TOWING SAFETY

Trailer hitch

Your vehicle may be equipped with an optional trailer tow package. The trailer tow package includes a receiver-type frame mounted hitch. This hitch is rated for the maximum towing capacity of this vehicle when the proper towing equipment is used. Choose a proper ball mount and hitch ball that is rated for the trailer to be towed. Genuine NISSAN ball mounts and hitch balls are available from a NISSAN dealer.

If your vehicle is not equipped with the optional trailer tow package, check the towing capacity of your bumper hitch or receiver-type frame mounted hitch. Choose a proper hitch for your vehicle and trailer. A Genuine NISSAN trailer hitch is available from a NISSAN dealer. Make sure the trailer hitch is securely attached to the vehicle to help avoid personal injury or property damage due to sway caused by crosswinds, rough road surfaces or passing trucks.

⚠ WARNING

Trailer hitch components have specific weight ratings. Your vehicle may be capable of towing a trailer heavier than the weight rating of the hitch components. Never exceed the weight rating of the hitch components. Doing so can cause serious personal injury or property damage.

Hitch ball

Choose a hitch ball of the proper size and weight rating for your trailer:

- The required hitch ball size is stamped on most trailer couplers. Most hitch balls also have the size printed on the top of the ball.
- Choose the proper class hitch ball based on the trailer weight.
- The diameter of the threaded shank of the hitch ball must be matched to the ball mount hole diameter. The hitch ball shank should be no more than 1/16” smaller than the hole in the ball mount.
- The threaded shank of the hitch ball must be long enough to be properly secured to the ball mount. There should be at least 2 threads showing beyond the lock washer and nut.

Ball mount

The hitch ball is attached to the ball mount and the ball mount is inserted into the hitch receiver. Choose a proper class ball mount based on the trailer weight. Additionally, the ball mount should be chosen to keep the trailer tongue level with the ground.

Weight carrying hitches

A weight carrying or “dead weight” ball mount is one that is designed to carry the whole amount of tongue weight and gross weight directly on the ball mount and on the receiver.

Weight distribution hitch

This type of hitch is also called a “load-leveling” or “equalizing” hitch. A set of bars attach to the ball mount and to the trailer to distribute the tongue weight (hitch weight) of your trailer. Many vehicles can’t carry the full tongue weight of a given trailer, and need some of the tongue weight transferred through the frame and pushing down on the front wheels. This gives stability to the tow vehicle.

A weight-distributing hitch system (Class IV) is recommended if you plan to tow trailers with a maximum weight over 5,000 lbs (2,268 kg). Check with the trailer and towing equipment manufacturers to determine if they recommend the use of a weight-distributing hitch system.

NOTE:

A weight-distributing hitch system may affect the operation of trailer surge brakes. If you are considering use of a weight-distributing hitch system with a surge brake-equipped trailer, check with the surge brake, hitch or trailer manufacturer to determine if and how this can be done.

Follow the instructions provided by the manufacturer for installing and using the weight-distributing hitch system.

General set-up instructions are as follows:

1. Park unloaded vehicle on a level surface. With the ignition on and the doors closed, allow the vehicle to stand for several minutes so that it can level.
2. Measure the height of a reference point on the front and rear bumpers at the center of the vehicle.
3. Attach the trailer to the vehicle and adjust the hitch equalizers so that the front bumper height is within 0 - .5 inches (0 – 13 mm) of the reference height measured in step 2. The rear bumper should be no higher than the reference height measured in step 2.

⚠ WARNING

Properly adjust the weight distributing hitch so the rear of the bumper is no higher than the measured reference height when the trailer is attached. If the rear bumper is higher than the measured reference height when loaded, the vehicle may handle unpredictably which could cause a loss of vehicle control and cause serious personal injury or property damage.

Sway control device

Sudden maneuvers, wind gusts, and buffeting caused by other vehicles can affect trailer handling. Sway control devices may be used to help control these affects. If you choose to use one, contact a reputable trailer hitch supplier to make sure the sway control device will work with the vehicle, hitch, trailer and the trailer's brake system. Follow the instructions provided by the manufacturer for installing and using the sway control device.

Class I hitch

Class I trailer hitch equipment (receiver, ball mount and hitch ball) can be used to tow trailers of a maximum weight of 2,000 lb (907 kg).

Class II hitch

Class II trailer hitch equipment (receiver, ball mount and hitch ball) can be used to tow trailers of a maximum weight of 3,500 lb (1,587 kg).

Class III hitch

Class III trailer hitch equipment (receiver, ball mount and hitch ball) can be used to tow trailers of a maximum weight of 5,000 lb (2,268 kg).

Tire pressures

- When towing a trailer, inflate the vehicle tires to the recommended cold tire pressure indicated on the Tire and Loading Information label.
- Trailer tire condition, size, load rating and proper inflation pressure should be in accordance with the trailer and tire manufacturer's specifications.

Safety chains

Always use suitable safety chains between your vehicle and the trailer. The safety chains should be crossed and should be attached to the hitch, not to the vehicle bumper or axle. The safety chains can be attached to the bumper if the hitch

ball is mounted to the bumper. Be sure to leave enough slack in the chains to permit turning corners.

Trailer lights

⚠ CAUTION

When splicing into the vehicle electrical system, a commercially available power-type module/converter must be used to provide power for all trailer lighting. This unit uses the vehicle battery as a direct power source for all trailer lights while using the vehicle tail light, stoplight and turn signal circuits as a signal source. The module/converter must draw no more that 15 milliamps from the stop and tail lamp circuits. Using a module/converter that exceeds these power requirements may damage the vehicle's electrical system. See a reputable trailer retailer to obtain the proper equipment and to have it installed.

Trailer lights should comply with federal and/or local regulations. For assistance in hooking up trailer lights, it is recommended that you contact a NISSAN dealer or reputable trailer retailer. Vehicles equipped with the optional trailer tow package are equipped with a 7-pin trailer harness connector. If your trailer is equipped with a flat 4-pin connector, an adapter will be needed to connect the trailer lights to the vehicle. Adapters are available at auto parts stores and hitch retailers.

Trailer brakes

When towing a trailer load of 3,500 lbs. (1,587 kg) or more, trailers with a brake system MUST be used. However, most states require a separate braking system on trailers with a loaded weight above a specific amount. Make sure the trailer meets the local regulations and the regulations where you plan to tow.

Several types of braking systems are available.

Surge Brakes - The surge brake actuator is mounted on the trailer tongue with a hydraulic line running to each trailer wheel. Surge brakes are activated by the trailer pushing against the hitch ball when the tow vehicle is braking. Hydraulic surge brakes are common on rental trailers and some boat trailers. In this type of system, there is no hydraulic or electric connection for brake operation between the tow vehicle and the trailer.

Electric Trailer Brakes - Electric braking systems are activated by an electronic signal sent from a trailer brake controller (special brake-sensing module). For additional information, refer to "Electric trailer brake controller" in this section.

Have a professional supplier of towing equipment make sure the trailer brakes are properly installed and demonstrate proper brake function testing.

⚠ WARNING

Never connect a trailer brake system directly to the vehicle brake system.

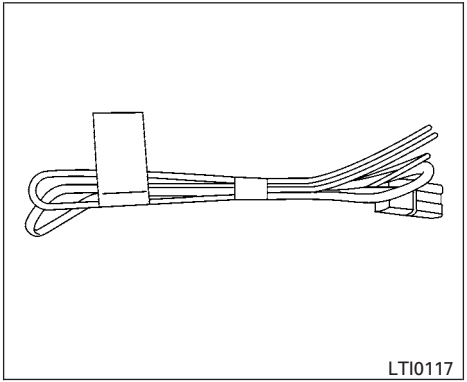

Jumper Harness

Electric trailer brake controller

Trailers equipped with electric brakes may require the installation of an aftermarket trailer brake controller.

Your vehicle is equipped with a connector and jumper harness that is specifically designed to be used when installing an aftermarket brake controller.

To install the electric trailer brake controller jumper harness, perform the following procedure:

1. Open the driver door. Move the seat to the rearmost position.

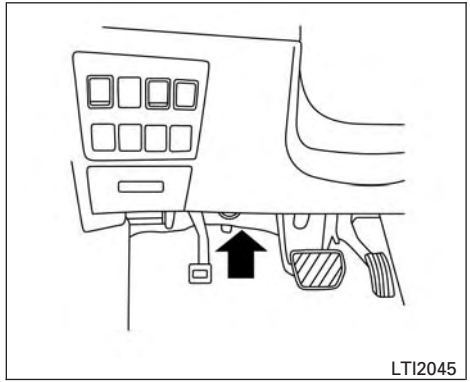

Connector Location

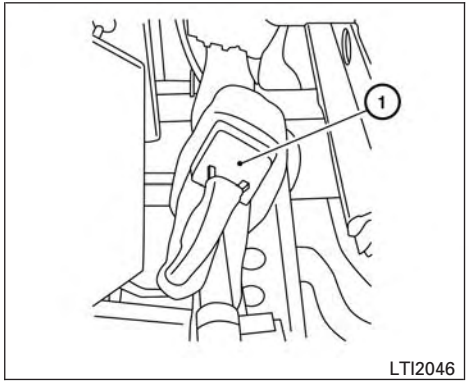

Connector

2. Locate the jumper harness connector under the lower portion of the instrument panel. The connector is taped to the wiring harness ① as indicated.

- The connector is marked with a white tag with “elec brake conn”.

Wire color designation for electric trailer brake controller jumper harness.

WIRE COLOR	NOTE
RED/GREEN	Vehicle stop lamp switch to trailer brake controller.
BLACK	Brake controller ground (-).
BROWN/WHITE	Trailer brake controller switched output.
RED/BLUE	Not used
RED	Fused trailer brake controller battery feed (B+).

3. Peel off the tape and connect the jumper harness to the connector.
4. Release the parking brake.
5. Install the aftermarket electric trailer brake controller according to the manufacturer’s instructions.

Pre-towing tips

- Be certain your vehicle maintains a level position when a loaded and/or unloaded trailer is hitched. Do not drive the vehicle if it has an abnormal nose-up or nose-down condition; check for improper tongue load, overload, worn suspension or other possible causes of either condition.
- Always secure items in the trailer to prevent load shift while driving.
- Keep the cargo load as low as possible in the trailer to keep the trailer center of gravity low.
- Load the trailer so approximately 60% of the trailer load is in the front half and 40% is in the back half. Also make sure the load is balanced side to side.
- Check your hitch, trailer tire pressure, vehicle tire pressure, trailer light operation, and trailer wheel lug nuts every time you attach a trailer to the vehicle.
- Be certain your rearview mirrors conform to all federal, state or local regulations. If not, install any mirrors required for towing before driving the vehicle.
- Determine the overall height of the vehicle and trailer so the required clearance is known.

Trailer towing tips

In order to gain skill and an understanding of the vehicle’s behavior, you should practice turning, stopping and backing up in an area which is free from traffic. Steering stability and braking performance will be somewhat different than under normal driving conditions.

- Always secure items in the trailer to prevent load shift while driving.
- Lock the trailer hitch coupler with a pin or lock to prevent the coupler from inadvertently becoming unlatched.
- Avoid abrupt starts, acceleration or stops.
- Avoid sharp turns or lane changes.
- Always drive your vehicle at a moderate speed.
- When backing up, hold the bottom of the steering wheel with one hand. Move your hand in the direction in which you want the trailer to go. Make small corrections and back up slowly. If possible, have someone guide you when you are backing up.

Always block the wheels on both vehicle and trailer when parking. Parking on a slope is not recommended; however, if you must do so:

⚠ CAUTION

If you move the shift lever to the P (Park) position before blocking the wheels and applying the parking brake, transmission damage could occur.

1. Apply and hold the brake pedal.
2. Have someone place blocks on the downhill side of the vehicle and trailer wheels.
3. After the wheel blocks are in place, slowly release the brake pedal until the blocks absorb the vehicle load.
4. Apply the parking brake.
5. Shift the transmission into P (Park).
6. Turn off the engine.

To drive away:

1. Start the vehicle.
2. Apply and hold the brake pedal.
3. Shift the transmission into gear.
4. Release the parking brake.
5. Drive slowly until the vehicle and trailer are clear from the blocks.
6. Apply and hold the brake pedal.
7. Have someone retrieve and store the blocks.

- While going downhill, the weight of the trailer pushing on the tow vehicle may decrease overall stability. Therefore, to maintain adequate control, reduce your speed and shift to a lower gear. Avoid long or repeated use of the brakes when descending a hill, as this reduces their effectiveness and could cause overheating. Shifting to a lower gear instead provides “engine braking” and reduces the need to brake as frequently.
- If the engine coolant temperature rises to a high temperature, refer to “If your vehicle overheats” in the “In case of emergency” section of this owner’s manual.
- Trailer towing requires more fuel than normal circumstances.
- Avoid towing a trailer for your vehicle’s first 500 miles (805 km).
- For the first 500 miles (805 km) that you do tow, do not drive over 50 mph (80 km/h).
- Have your vehicle serviced more often than at intervals specified in the recommended Maintenance Schedule in the “Maintenance and schedules” section of this manual.

- When making a turn, your trailer wheels will be closer to the inside of the turn than your vehicle wheels. To compensate for this, make a larger than normal turning radius during the turn.
- Crosswinds and rough roads will adversely affect vehicle/trailer handling, possibly causing vehicle sway. When being passed by larger vehicles, be prepared for possible changes in crosswinds that could affect vehicle handling.

Do the following if the trailer begins to sway:

1. Take your foot off the accelerator pedal to allow the vehicle to coast and steer as straight ahead as the road conditions allow. This combination will help stabilize the vehicle.
   - Do not correct trailer sway by steering or applying the brakes.
2. When the trailer sway stops, gently apply the brakes and pull to the side of the road in a safe area.
3. Try to rearrange the trailer load so it is balanced. For additional information, refer to "Pre-towing tips" in this section.

- Be careful when passing other vehicles. Passing while towing a trailer requires considerably more distance than normal passing. Remember, the length of the trailer must also pass the other vehicle before you can safely change lanes.
- Use the Tow Mode or downshift the transmission to a lower gear for engine braking when driving down steep or long hills. This will help slow the vehicle without applying the brakes.
- Avoid holding the brake pedal down too long or too frequently. This could cause the brakes to overheat, resulting in reduced braking efficiency.
- Increase your following distance to allow for greater stopping distances while towing a trailer. Anticipate stops and brake gradually.
- NISSAN recommends that the cruise control not be used while towing a trailer.
- Some states or provinces have specific regulations and speed limits for vehicles that are towing trailers. Obey the local speed limits.

- Check your hitch, trailer wiring harness connections, and trailer wheel lug nuts after 50 miles (80 km) of travel and at every break.
- When launching a boat, don't allow the water level to go over the exhaust tail pipe or rear bumper.
- Make sure you disconnect the trailer lights before backing the trailer into the water or the trailer lights may burn out.

When towing a trailer, final drive gear oil should be replaced and transmission oil/fluid should be changed more frequently. For additional information, refer to the "Do-it-yourself" section in this manual.

Tow mode

Using tow mode is recommended when pulling a heavy trailer or hauling a heavy load. Press the TOW MODE switch to activate tow mode. The indicator light on the TOW MODE switch illuminates when tow mode is selected. Press the TOW MODE switch again to turn tow mode off. Tow mode is automatically canceled when the ignition switch is turned off.

Tow mode includes the following features:

- Grade logic — Adjusts transmission shifts when pulling a trailer or hauling a load up a grade.
- Downhill Speed Control (DSC) — automatically downshifts when driving down a grade with a trailer or heavy load to help control vehicle speed.

Driving the vehicle in the tow mode with no trailer/load or light trailer/light load will not cause any damage. However, fuel economy may be reduced and the transmission/engine driving characteristics may feel unusual.

When towing a trailer, final drive gear oil should be replaced and transmission oil/fluid should be changed more frequently. For additional information, refer to the "Do-it-yourself" section of this manual.

FLAT TOWING FOR 4–WHEEL DRIVE VEHICLE (if so equipped)

Towing your vehicle with all four wheels on the ground is sometimes called flat towing. This method is sometimes used when towing a vehicle behind a recreational vehicle, such as a motor home.

⚠ CAUTION

- **Failure to follow these guidelines can result in severe transmission damage.**
- **Never flat tow your 4-wheel drive (4WD) vehicle.**
- **DO NOT tow your 4-wheel drive (4WD) vehicle with any wheels on the ground. Doing so may cause serious and expensive damage to the powertrain.**
- **For emergency towing procedures refer to "Towing recommended by NISSAN" in the "In case of emergency" section of this manual.**

FLAT TOWING FOR FRONT WHEEL DRIVE VEHICLE (if so equipped)

Towing your vehicle with all four wheels on the ground is sometimes called flat towing. This method is sometimes used when towing a vehicle behind a recreational vehicle, such as a motor home.

⚠ CAUTION

- **Failure to follow these guidelines can result in severe transmission damage.**
- **Whenever flat towing your vehicle, always tow forward, never backward.**
- **Never tow your front wheel drive vehicle with the front tires on the ground. Doing so may cause serious and expensive damage to the powertrain.**
- **DO NOT tow your front wheel drive continuously variable transmission vehicle with all four wheels on the ground (flat towing). Doing so WILL DAMAGE internal transmission parts due to lack of transmission lubrication.**
- **For emergency towing procedures refer to "Towing recommended by NISSAN" in the "In case of emergency" section of this manual.**

Continuously Variable Transmission

To tow a vehicle equipped with a continuously variable transmission, an appropriate vehicle dolly **MUST** be placed under the towed vehicle's drive wheels. **Always** follow the dolly manufacturer's recommendations when using their product.

DOT (Department of Transportation) Quality Grades: All passenger car tires must conform to federal safety requirements in addition to these grades.

Quality grades can be found where applicable on the tire sidewall between tread shoulder and maximum section width. For example:

Treadwear 200 Traction AA Temperature A

Treadwear

The treadwear grade is a comparative rating based on the wear rate of the tire when tested under controlled conditions on a specified government test course. For example, a tire graded 150 would wear one and one-half (1 1/2) times as well on the government course as a tire graded 100. The relative performance of tires depends upon the actual conditions of their use, however, and may depart significantly from the norm due to variations in driving habits, service practices and differences in road characteristics and climate.

Traction AA, A, B and C

The traction grades, from highest to lowest, are AA, A, B, and C. Those grades represent the tire's ability to stop on wet pavement as measured under controlled conditions on specified government test surfaces of asphalt and concrete. A tire marked C may have poor traction performance.

⚠ WARNING

The traction grade assigned to this tire is based on straight-ahead braking traction tests, and does not include acceleration, cornering, hydroplaning, or peak traction characteristics.

Temperature A, B and C

The temperature grades are A (the highest), B, and C, representing the tire's resistance to the generation of heat, and its ability to dissipate heat when tested under controlled conditions on a specified indoor laboratory test wheel. Sustained high temperature can cause the material of the tire to degenerate and reduce tire life, and excessive temperature can lead to sudden tire failure. The grade C corresponds to a level of performance which all passenger car tires must meet under the Federal Motor Safety Standard No. 109. Grades B and A represent higher levels of performance on the laboratory test wheel than the minimum required by law.

⚠ WARNING

The temperature grade for this tire is established for a tire that is properly inflated and not overloaded. Excessive speed, under-inflation, or excessive loading, either separately or in combination, can cause heat build-up and possible tire failure.

EMISSION CONTROL SYSTEM WARRANTY

Your NISSAN vehicle is covered by the following emission warranties:

For USA

1. Emission Defects Warranty
2. Emissions Performance Warranty

Details of this warranty may be found with other vehicle warranties in your Warranty Information Booklet which comes with your NISSAN vehicle. If you did not receive a Warranty Information Booklet, or it is lost, you may obtain a replacement by writing to:

- Nissan North America, Inc.
  Consumer Affairs Department
  P.O. Box 685003
  Franklin, TN 37068-5003

For Canada

Emission Control System Warranty

Details of this warranty may be found with other vehicle warranties in your Warranty Information Booklet which comes with your NISSAN vehicle. If you did not receive a Warranty Information Booklet, or it is lost, you may obtain a replacement by writing to:

- Nissan Canada Inc.
  5290 Orbitor Drive
  Mississauga, Ontario, L4W 4Z5

REPORTING SAFETY DEFECTS

For USA

If you believe that your vehicle has a defect which could cause a crash or could cause injury or death, you should immediately inform the National Highway Traffic Safety Administration (NHTSA) in addition to notifying NISSAN.

If NHTSA receives similar complaints, it may open an investigation, and if it finds that a safety defect exists in a group of vehicles, it may order a recall and remedy campaign. However, NHTSA cannot become involved in individual problems between you, your dealer, or NISSAN.

To contact NHTSA, you may call the Vehicle Safety Hotline toll-free at 1-888-327-4236 (TTY: 1-800-424-9153); go to http://www.safercar.gov; or write to: Administrator, NHTSA, 400 Seventh Street, SW., Washington, D.C. 20590. You can also obtain other information about motor vehicle safety from http://www.safercar.gov.

You may notify NISSAN by contacting our Consumer Affairs Department, toll-free, at 1-800-NISSAN-1.

For Canada

If you believe that your vehicle has a defect which could cause a crash or could cause injury or death, you should immediately inform Transport Canada in addition to notifying NISSAN.

If Transport Canada receives complaints, it may open an investigation, and if it finds that a safety defect exists in a group of vehicles, it may request that NISSAN conduct a recall campaign. However, Transport Canada cannot become involved in individual problems between you, your dealer, or NISSAN.

You may contact Transport Canada's Defect Investigations and Recalls Division toll free at 1-800-333-0510. You may also report safety defects online at: https://wwwapps.tc.gc.ca/Saf-Sec-Sur/7/PCDB-BDPP/fc-cp.aspx?lang=eng (English speakers) or

https://wwwapps.tc.gc.ca/Saf-Sec-Sur/7/PCDB-BDPP/fc-cp.aspx?lang=fra (French speakers)

Additional information concerning motor vehicle safety may be obtained from Transport Canada's Road Safety Information Centre at 1-800-333-0371 or online at www.tc.gc.ca/roadsafety (English speakers) or www.tc.gc.ca/securiteroutiere (French speakers).

To notify NISSAN of any safety concerns please contact our Consumer Information Centre toll free at 1-800-387-0122.

READINESS FOR INSPECTION/ MAINTENANCE (I/M) TEST

⚠ WARNING

A vehicle equipped with Four-Wheel Drive (4WD) should never be tested using a two wheel dynamometer (such as the dynamometers used by some states for emissions testing), or similar equipment. Make sure you inform the test facility personnel that your vehicle is equipped with 4WD before it is placed on a dynamometer. Using the wrong test equipment may result in transmission damage or unexpected vehicle movement which could result in serious vehicle damage or personal injury.

Due to legal requirements in some states and Canadian Provinces, your vehicle may be required to be in what is called the "ready condition" for an Inspection/Maintenance (I/M) test of the emission control system.

The vehicle is set to the "ready condition" when it is driven through certain driving patterns. Usually, the ready condition can be obtained by ordinary usage of the vehicle.

If a powertrain system component is repaired or the battery is disconnected, the vehicle may be reset to a "not ready" condition. Before taking the I/M test, check the vehicle's inspection/maintenance test readiness condition. Place the ignition switch in the ON position without starting the engine. If the Malfunction Indicator Light (MIL) comes on steady for 20 seconds and then blinks for 10 seconds, the I/M test condition is "not ready". If the MIL does not blink after 20 seconds, the I/M test condition is "ready". It is recommended that you visit a NISSAN dealer to set the "ready condition" or to prepare the vehicle for testing.

EVENT DATA RECORDERS (EDR)

This vehicle is equipped with an Event Data Recorder (EDR). The main purpose of an EDR is to record, in certain crash or near crash-like situations, such as an air bag deployment or hitting a road obstacle, data that will assist in understanding how a vehicle's systems performed. The EDR is designed to record data related to vehicle dynamics and safety systems for a short period of time, typically 30 seconds or less. The EDR in this vehicle is designed to record such data as:

- How various systems in your vehicle were operating;
- Whether or not the driver and passenger safety belts were buckled/fastened;
- How far (if at all) the driver was depressing the accelerator and/or brake pedal; and,
- How fast the vehicle was traveling.
- Sounds are not recorded.

These data can help provide a better understanding of the circumstances in which crashes and injuries occur. NOTE: EDR data are recorded by your vehicle only if a nontrivial crash situation occurs; no data are recorded by the EDR under normal driving conditions and no personal data (e.g. name, gender, age and crash location) are recorded. However, other parties, such as law enforcement, could combine the EDR data with the type of personally identifying data routinely acquired during a crash investigation.

To read data recorded by an EDR, special equipment is required and access to the vehicle or the EDR is needed. In addition to the vehicle manufacturer and NISSAN dealer, other parties, such as law enforcement, that have the special equipment, can read the information if they have access to the vehicle or the EDR. EDR data will only be accessed with the consent of the vehicle owner or lessee or as otherwise required or permitted by law.

OWNER'S MANUAL/SERVICE MANUAL ORDER INFORMATION

Genuine NISSAN Service Manuals for this model year and prior can be purchased. A Genuine NISSAN Service Manual is the best source of service and repair information for your vehicle. This manual is the same one used by the factory-trained technicians working at NISSAN dealerships. Genuine NISSAN Owner's Manuals can also be purchased.

For USA

For current pricing and availability of Genuine **NISSAN Service Manuals,** contact:

www.nissan-techinfo.com

For current pricing and availability of Genuine **NISSAN Owner's Manuals,** contact:

1-800-247-5321

For Canada

To purchase a copy of a Genuine NISSAN Service Manual or Owner's Manual, for this model year and prior, please contact your nearest NISSAN dealer. For the phone number and location of a NISSAN dealer in your area, call the NISSAN Information Center at 1-800-387-0122 and a bilingual NISSAN representative will assist you.

11 Index

2nd row bench seat adjustment 1-7, 1-9

A

Air bag (See supplemental restraint system) 1-49
Air bag system
  Front (See supplemental front impact air bag system) 1-56
Air bag warning labels 1-66
Air bag warning light. 1-67, 2-14
Air bag warning light, supplemental . .1-67, 2-14
Air cleaner. 8-15
Air cleaner housing filter 8-15
Air conditioner
  Air conditioner specification label 10-12
  Air conditioner system refrigerant and oil recommendations 10-7
  Air conditioner system refrigerant recommendations. 10-7
  Heater and air conditioner controls 4-49
  Servicing air conditioner 4-55
Alarm system
(See vehicle security system) 2-30
Anchor point locations 1-32
Antenna 4-70
Antifreeze 5-74
Anti-lock brake warning light. 2-11
Anti-lock Braking System (ABS). 5-68
Apps 4-129
APPS button 4-6
Armrests. 1-10
Around View® Monitor. 4-28
Audible reminders 2-17
Audio system 4-55
  AM radio reception 4-56
  Bluetooth® streaming audio. 4-64
  Compact disc (CD) player 4-76
  Digital Versatile Disc (DVD) Player Operation 4-85
  FM/AM radio with compact disc (CD) player 4-68
  FM radio reception 4-56
  iPod® Player. 4-61, 4-80
  iPod® player operation 4-61, 4-80
  Radio 4-55
  Steering wheel audio control switch 4-8, 4-69
  USB (Universal Serial Bus) Connection Port 4-61, 4-77
Autolight switch. 2-37
Automatic
  Automatic drive positioner 3-36, 3-39
  Automatic power window switch 2-60
Automatic anti-glare inside mirror 3-34
Automatic door locks 3-6
Automatic drive positioner 3-36, 3-39
AUX jack 4-87

B

Back button. 4-6
Battery 5-74, 8-11
  Charge warning light 2-12
Battery replacement 8-20
  Key fob 8-20
  NISSAN Intelligent Key®. 8-21
Before starting the engine 5-14
Belt (See drive belt) 8-13
Blind Spot Warning (BSW) 5-20
Block heater
  Engine 5-75
Bluetooth® hands-free phone system. . . .4-113
Booster seats 1-46
Brake
  Anti-lock Braking System (ABS). 5-68
  Brake fluid. 8-10
  Brake light (See stop light). 8-23
  Brake system 5-67
  Brake warning light 2-11
  Brake wear indicators 2-17, 8-17
  Parking brake operation 5-19
  Self-adjusting brakes. 8-17
Brake assist 5-69
Brake fluid. 8-10
Brakes. 8-17
Brake system 5-67
Break-in schedule 5-60
Brightness/contrast button 4-6
Brightness control
  Instrument panel 2-39
Bulb check/instrument panel. 2-10
Bulb replacement. 8-23

C

Capacities and recommended fuel/lubricants 10-2
Cargo area storage bin 2-56
Cargo light 2-64
Cargo (See vehicle loading information) . . .10-13
Car phone or CB radio. 4-112
CD care and cleaning 4-111
CD player (See audio system) 4-76
Check tire pressure 2-28
Child restraints 1-25, 1-26, 1-27, 1-29
LATCH (Lower Anchors and Tethers for CHildren) System 1-29
Precautions on child restraints. 1-27, 1-34, 1-40, 1-46
Top tether strap anchor point locations . .1-32
Child restraint with top tether strap. 1-32
Child safety rear door lock 3-7
Chimes, audible reminders 2-17
Cleaning exterior and interior 7-2, 7-4
Clock set/adjustment 4-17
C.M.V.S.S. certification label 10-11
Cold weather driving. 5-74
Compact disc (CD) player 4-76
Compass. 2-7
Console box 2-52
Continuously Variable Transmission (CVT). . .5-15
Continuously Variable Transmission (CVT) fluid. 8-9
Driving with Continuously Variable Transmission (CVT) 5-15
Control panel buttons. 4-5
Back button 4-6
Brightness/contrast button 4-6
Clock set 4-17
Enter button 4-7
Setting button 4-6
Controls
Audio controls 4-68
Audio controls (steering wheel) 4-8, 4-69
Heater and air conditioner controls. 4-49
Coolant
Capacities and recommended fuel/lubricants 10-2
Changing engine coolant 8-5
Checking engine coolant level 8-5
Engine coolant temperature gauge 2-5
Corrosion protection 7-7
Cruise control 5-38, 5-38, 5-39
Cup holders 2-54

D

Daytime Running Light System 2-38
Defroster switch
Rear window and outside mirror defroster switch. 2-35
Digital Versatile Disc (DVD) player 4-85
Dimensions and weights 10-9
Dimmer switch for instrument panel 2-39
Display controls (see control panel buttons) 4-6, 4-9
Door locks 3-5
Drive belt 8-13
Drive positioner, Automatic. 3-36, 3-39
Driving
Cold weather driving. 5-74
Driving with Continuously Variable Transmission (CVT) 5-15
Precautions when starting and driving 5-2
Driving the vehicle 5-15
Dual panel moonroof 2-61
Dual power moonroof 2-61

E

Economy - fuel 5-62
Emergency engine shutoff 5-12, 6-2
Emission control information label 10-11
Emission control system warranty. 10-30
Engine
Before starting the engine. 5-14
Block heater 5-75
Capacities and recommended fuel/lubricants 10-2
Changing engine coolant 8-5
Changing engine oil 8-7
Changing engine oil filter 8-8
Checking engine coolant level 8-5
Checking engine oil level 8-6
Engine compartment check locations 8-3
Engine coolant temperature gauge 2-5
Engine cooling system 8-4
Engine oil 8-6
Engine oil and oil filter recommendation . .10-6
Engine oil viscosity. 10-7
Engine serial number. 10-11
Engine specifications 10-8
Starting the engine 5-14
Engine coolant temperature gauge 2-5
Enter button 4-7
Event Data recorders 10-32
Exhaust gas (Carbon monoxide) 5-2
Explanation of maintenance items 9-2

Explanation of scheduled maintenance items . .9-5
Extended storage switch 2-50
Eyeglass case 2-53

F

Flashers (See hazard warning flasher switch). .6-2
Flat tire 6-3
Floor mat positioning aid 7-5
Fluid
Brake fluid 8-10
Capacities and recommended fuel/lubricants 10-2
Continuously Variable Transmission (CVT) fluid 8-9
Engine coolant. 8-4
Engine oil 8-6
Power steering fluid 8-9
Windshield-washer fluid. 8-11
F.M.V.S.S. certification label 10-11
Fog light switch 2-40
Forward Emergency Braking (FEB) . . .2-12, 5-54
Front air bag system
(See supplemental restraint system) 1-56
Front power seat adjustment 1-5
Front seats 1-2
Fuel
Capacities and recommended fuel/lubricants 10-2
Fuel economy 5-62
Fuel-filler door and cap 3-29
Fuel gauge 2-6
Fuel octane rating 10-5
Fuel recommendation 10-4
Loose fuel cap warning 2-28
Fuel efficient driving tips. 5-61
Fuel-filler door 3-28
Fuel gauge 2-6
Fuses 8-18
Fusible links 8-19

G

Garage door opener, HomeLink® Universal Transceiver 2-65, 2-66, 2-67, 2-68, 2-68
Gas cap 3-29
Gauge
Engine coolant temperature gauge 2-5
Fuel gauge 2-6
Odometer 2-4
Speedometer 2-4
Tachometer 2-5
Trip odometer 2-4
General maintenance 9-2
Glove box. 2-52
Glove box lock 2-52

H

Hands-free phone system, Bluetooth®. . . .4-113
Hazard warning flasher switch 6-2
Headlight and turn signal switch 2-36
Headlight control switch 2-36
Headlights 8-22
Headphones
(See NISSAN mobile entertainment system) . .4-99
Head restraints. 1-12
Heated rear seats 2-42
Heated seats 2-40
Heated seat switches 2-41
Heated steering wheel switch 2-44
Heater
Heater and air conditioner controls. 4-49
Heater operation 4-50
Hill descent control switch 2-45
Hill descent control system 5-72
Hill start assist system. 5-73
HomeLink® Universal Transceiver 2-65, 2-66, 2-67, 2-68, 2-68
Hood 3-20
Hook
Luggage hook 2-56
Horn 2-40

I

Ignition Switch
Push-Button Ignition Switch 5-10
Immobilizer system 2-31, 5-13
Important vehicle information label 10-11
In-cabin microfilter 8-15
Increasing fuel economy. 5-62
Indicator lights and audible reminders
(See warning/indicator lights and audible reminders) 2-10, 2-15
Inside automatic anti-glare mirror. 3-34
Instrument brightness control 2-39
Instrument panel 0-6, 2-2
Instrument panel dimmer switch 2-39
Intelligent 4WD 5-62
Intelligent Cruise Control (ICC). 5-40
Intelligent Key system
Key operating range. 3-9
Key operation 3-10

Mechanical key 3-3
Remote keyless entry operation. 3-13
Troubleshooting guide. 3-16
Warning signals 3-16
Interior light. 2-63
iPod® Player 4-61, 4-80
ISOFIX child restraints 1-29

J

Jump starting 6-9, 8-13

K

Key 3-2
Key fob battery replacement 8-20
Keyless entry
With Intelligent Key system
(See Intelligent Key system). 3-13
Keys
NISSAN Intelligent Key® 3-2, 3-7
NISSAN Vehicle Immobilizer System keys. .3-4

L

Labels
Air conditioner specification label. 10-12
C.M.V.S.S. certification label 10-11
Emission control information label 10-11
Engine serial number. 10-11
F.M.V.S.S. certification label. 10-11
Tire and Loading Information label 10-12
Vehicle identification number (VIN) 10-10
Vehicle identification number (VIN)
plate. 10-10
Warning labels (for SRS) 1-66
Language setting 4-18
LATCH (Lower Anchors and Tethers for CHildren)
System 1-29
LED Daytime Running Lights (DRL) 2-38
License plate
Installing the license plate 10-12
Liftgate 3-21
Liftgate release. 3-27
Light
Air bag warning light 1-67, 2-14
Brake light (See stop light) 8-23
Bulb check/instrument panel 2-10
Bulb replacement 8-23
Charge warning light 2-12
Exterior and Interior lights 8-23
Fog lights. 8-22
Fog light switch 2-40
Headlight and turn signal switch 2-36
Headlight control switch 2-36
Headlights 8-22
Interior light. 2-63
Light bulbs 8-22
Low tire pressure warning light 2-12
Low windshield-washer fluid warning
light 2-28
Passenger air bag and status light 1-58
Security indicator light. 2-16
Spotlights (See map light) 2-64
Warning/indicator lights and audible
reminders 2-10, 2-15
Lights 8-22
Map lights 2-64
Lock
Child safety rear door lock 3-7
Door locks 3-5
Glove box lock 2-52
Liftgate release. 3-27
Power door locks 3-6
Loose fuel cap warning 2-28
Low fuel warning light 2-14, 2-28
Low tire pressure warning light 2-12
Low windshield-washer fluid warning light. . .2-28
Luggage hook 2-56
Luggage rack (see roof rack) 2-57
Luggage (See vehicle loading information). .10-13

M

Maintenance
General maintenance 9-2
Inside the vehicle 9-3
Maintenance precautions 8-2
Outside the vehicle 9-2
Seat belt maintenance. 1-24
Under the hood and vehicle 9-4
Maintenance log 9-13
Maintenance requirements 9-2
Maintenance schedules. 9-7
Maintenance under severe operation
conditions 9-12
Malfunction indicator light. 2-16
Manual front seat adjustment. 1-3
Map lights 2-64
Memory Seat 3-36, 3-39
Meters and gauges 2-3
Instrument brightness control. 2-39

Mirror
Automatic anti-glare inside mirror. 3-34
Outside mirrors 3-35
Rearview 3-33
Vanity mirror 3-33
Mirrors 3-33
Mobile Entertainment System (MES). 4-88
Moonroof. 7-4
Moving Object Detection (MOD). 4-42

N

NissanConnect[SM] 4-129
NISSAN Intelligent Key® 3-2, 3-7
NISSAN Vehicle Immobilizer System . .2-31, 5-13

O

Octane rating (See fuel octane rating) 10-5
Odometer 2-4
Oil
Capacities and recommended fuel/lubricants 10-2
Changing engine oil. 8-7
Changing engine oil filter 8-8
Checking engine oil level 8-6
Engine oil 8-6
Engine oil and oil filter recommendation . .10-6
Engine oil viscosity. 10-7
Outside mirrors 3-35
Overhead sunglasses holder 2-53
Overheat
If your vehicle overheats. 6-11
Owner's manual order form 10-32
Owner's manual/service manual order information 10-32

P

Parking
Parking brake operation 5-19
Parking/parking on hills 5-67
Parking brake. 5-19
Phone, Bluetooth® hands-free system 4-113
Power
Front seat adjustment 1-5
Power door locks 3-6
Power outlet. 2-48, 2-49
Power rear windows 2-59
Power steering fluid 8-9
Power steering system 5-67
Power windows 2-58
Rear power windows 2-59
Power inverter switch 2-47
Power outlet. 2-48, 2-49
Power steering 5-67
Power steering fluid 8-9
Precautions
Maintenance precautions 8-2
On-pavement and off-road driving precautions 5-6
Precautions on booster seats 1-27, 1-34, 1-40, 1-46
Precautions on child restraints. 1-27, 1-34, 1-40, 1-46
Precautions on seat belt usage 1-17
Precautions on supplemental restraint system 1-49
Precautions when starting and driving 5-2
Push starting 6-11

R

Radio
Car phone or CB radio. 4-112
FM/AM radio with compact disc (CD) player 4-68
Steering wheel audio control switch 4-8, 4-69
Readiness for inspection maintenance (I/M) test 10-31
Rear Cross Traffic Alert (RCTA) 5-29
Rear power windows 2-59
Rear sonar system 5-73
Rearview mirror 3-33
RearView Monitor 4-21
Rear window and outside mirror defroster switch. 2-35
Rear window wiper and washer switches . . .2-34
Recommended Fluids 10-2
Recorders
Event Data 10-32
Refrigerant recommendation 10-7
Registering a vehicle in another country . . .10-10
Remote controller
(See NISSAN mobile entertainment system). . .4-97
Remote engine start 5-15
Remote Start. 3-18
Reporting safety defects (US only) 10-30
Roof rack 2-57

S

Safety
- Child safety rear door lock 3-7
- Child seat belts 1-27, 1-34, 1-40, 1-46
- Reporting safety defects (US only) 10-30

Seat adjustment
- Front manual seat adjustment 1-3
- Front power seat adjustment 1-5
- Second row bench seats 1-7, 1-9

Seatback pockets 2-51

Seat belt
- Child safety. 1-25
- Infants and small children 1-26
- Injured Person 1-20
- Larger children 1-26
- Precautions on seat belt usage 1-17
- Pregnant women. 1-20
- Seat belt extenders 1-24
- Seat belt maintenance. 1-24
- Seat belts 1-17, 7-6
- Three-point type with retractor 1-20

Seat belt extenders 1-24

Seat belt warning light 1-20, 2-14

Seats
- 2nd row bench seat adjustment 1-7, 1-9
- Adjustment. 1-2
- Armrests 1-10
- Automatic drive positioner 3-36, 3-39
- Front seats. 1-2
- Heated seats. 2-40
- Manual front seat adjustment. 1-3

Security indicator light. 2-16

Security system (NISSAN Vehicle Immobilizer System), engine start 2-31, 5-13

Security systems
- Vehicle security system 2-30

Self-adjusting brakes 8-17

Service manual order form. 10-32

Servicing air conditioner. 4-55

Setting button 4-6

Smartphone connectivity 4-129

Sonar
- Rear system 5-73

Spark plug replacement. 8-14

Spark plugs 8-14

Specifications 10-8

Speedometer 2-4

Speedometer and odometer 2-4

Spotlights (See map light) 2-64

SRS warning label. 1-66

Standard maintenance 9-7

Starting
- Before starting the engine. 5-14
- Jump starting 6-9, 8-13
- Precautions when starting and driving. . . .5-2
- Push starting 6-11
- Starting the engine 5-14

Starting the engine 5-14

Steering
- Power steering fluid 8-9
- Power steering system 5-67

Steering wheel. 3-31

Steering wheel audio control switch . . .4-8, 4-69

Stop light. 8-23

Storage. 2-51

Storage bin. 2-56

Storage tray 2-51

Sunglasses case. 2-53

Sunglasses holder. 2-53

Sunroof. 7-4

Sun visors 3-32

Supplemental air bag warning labels. 1-66

Supplemental air bag warning light . . .1-67, 2-14

Supplemental front impact air bag system. . .1-56

Supplemental restraint system
- Information and warning labels 1-66
- Precautions on supplemental restraint system 1-49

Supplemental restraint system (Supplemental air bag system) 1-49

Switch
- Autolight switch 2-37
- Automatic power window switch 2-60
- Fog light switch 2-40
- Hazard warning flasher switch 6-2
- Headlight and turn signal switch 2-36
- Headlight control switch 2-36
- Hill descent control switch 2-45
- Instrument brightness control. 2-39
- Power door lock switch 3-6
- Power inverter switch 2-47
- Rear window and outside mirror defroster switch. 2-35
- Rear window wiper and washer switches 2-34
- Steering wheel switch for audio control/Bluetooth® Hands-Free Phone System 4-69
- Tow mode switch 2-46
- Turn signal switch 2-39
- Vehicle dynamic control (VDC) off switch. 2-44

T

Tachometer 2-5
Temperature gauge
Engine coolant temperature gauge 2-5
Theft (NISSAN Vehicle Immobilizer System), engine start 2-31, 5-13
Three-way catalyst 5-2
Tire
Flat tire 6-3
Spare tire 6-4, 8-35
Tire and Loading Information label 10-12
Tire chains 8-32
Tire pressure 8-25
Tire rotation. 8-32
Tires of 4-wheel drive 8-35
Types of tires 8-31
Uniform tire quality grading 10-29
Wheels and tires 8-25, 10-9
Wheel/tire size 10-9
Tire pressure
Low tire pressure warning light 2-12
Tire Pressure Monitoring System (TPMS) 5-3
Top tether strap child restraint 1-32
Towing
4-wheel drive models 6-13
Flat towing 10-28
Towing load/specification 10-20
Tow truck towing. 6-12
Trailer towing 10-17
Towing a trailer 10-17
Tow mode switch 2-46
Transceiver
HomeLink® Universal
Transceiver 2-65, 2-66, 2-67, 2-68, 2-68
Transmission
Continuously Variable Transmission (CVT) fluid. 8-9
Driving with Continuously Variable Transmission (CVT) 5-15
Travel (See registering a vehicle in another country) 10-10
Trip odometer 2-4
Turn signal switch 2-39

U

Uniform tire quality grading 10-29
USB interface 4-61, 4-77

V

Vanity mirror 3-33
Vehicle dimensions and weights 10-9
Vehicle dynamic control (VDC) off switch . . .2-44
Vehicle Dynamic Control (VDC) system 5-69
Vehicle identification 10-10
Vehicle identification number (VIN) 10-10
Vehicle identification number (VIN) (Chassis number) 10-10
Vehicle identification number (VIN) plate . . .10-10
Vehicle immobilizer system. 2-31, 5-13
Vehicle loading information 10-13
Vehicle recovery. 6-14, 6-15
Vehicle security system 2-30
Vehicle security system (NISSAN Vehicle Immobilizer System), engine start 2-31, 5-13
Vents 4-46
Visors 3-32
Voice Recognition System. 4-136

W

Warning
Air bag warning light 1-67, 2-14
Anti-lock brake warning light 2-11
Battery charge warning light 2-12
Brake warning light 2-11
Hazard warning flasher switch 6-2
Loose fuel cap warning 2-28
Low fuel warning light 2-14, 2-28
Low tire pressure warning light 2-12
Low windshield-washer fluid warning light 2-28
Passenger air bag and status light 1-58
Seat belt warning light 1-20, 2-14
Supplemental air bag warning light 1-67, 2-14
TPMS. 2-4
Vehicle security system 2-30
Warning/indicator lights and audible reminders 2-10, 2-15
Warning labels (for SRS) 1-66
Warning/indicator lights and audible reminders 2-10, 2-15
Audible reminders 2-10, 2-15
Indicator lights 2-10, 2-15
Warning lights. 2-10, 2-15
Warning lights. 2-10, 2-15
Warning lights, indicator lights and audible reminders. 2-10
Washer switch
Rear window wiper and washer switches 2-34

Weights (See dimensions and weights) 10-9
Wheels and tires 8-25, 10-9
Wheel/tire size 10-9
When traveling or registering in another
country 10-10
Windows 2-58
Locking passengers' windows 2-59
Power rear windows 2-59
Power windows 2-58
Rear power windows 2-59
Windshield-washer fluid. 8-11
Windshield wiper blades 8-16
Wiper
Rear window wiper and washer
switches 2-34
Wiper blades. 8-16
Wiper and washer switch 2-33

FUEL RECOMMENDATION:

Use unleaded regular gasoline with an octane rating of at least 87 AKI (Anti-Knock Index) number (Research octane number 91).

⚠ CAUTION

- **Using a fuel other than that specified could adversely affect the emission control system, and may also affect the warranty coverage.**
- **Under no circumstances should a leaded gasoline be used, because this will damage the three-way catalyst.**
- **Do not use E-15 or E-85 fuel in your vehicle. Your vehicle is not designed to run on E-15 or E-85 fuel. Using E-15 or E-85 fuel in a vehicle not specifically designed for E-15 or E-85 fuel can adversely affect the emission control devices and systems of the vehicle. Damage caused by such fuel is not covered by the NISSAN New Vehicle Limited Warranty.**
- **Do not use fuel that contains the octane booster methylcyclopentadienyl manganese tricarbonyl (MMT). Using fuel containing MMT may adversely affect vehicle performance and vehicle emissions. Not all fuel dispensers are labeled to indicate MMT content, so you may have to consult your gasoline retailer for more details. Note that Federal and California laws prohibit the use of MMT in reformulated gasoline.**
- **U.S. government regulations require ethanol dispensing pumps to be identified by a small, square, orange and black label with the common abbreviation or the appropriate percentage for that region.**

For additional information, refer to “Recommended fluids/lubricants and capacities” in the “Technical and consumer information” section of this manual.

ENGINE OIL RECOMMENDATION:

▪ Genuine “NISSAN Motor Oil 0W-20 SN”

For additional information, refer to “Engine oil and oil filter recommendations” in the “Technical and consumer information” section of this manual.

COLD TIRE PRESSURE:

Refer to the Tire and loading information label.

The label is typically located on the driver side center pillar or on the driver’s door. For additional information, refer to “Wheels and tires” in the “Do-it-yourself” section of this manual.

RECOMMENDED NEW VEHICLE BREAK-IN PROCEDURE:

During the first 1,200 miles (2,000 km) of vehicle use, follow the break-in procedure recommendations for the future reliability and economy of your new vehicle. For additional information, refer to “Break-in schedule” in the “Starting and driving” section of this manual. Failure to follow these recommendations may result in vehicle damage or shortened engine life.

Printing : December 2016 (11)
Publication No.: OM17EA 0R52U1
Printed in U.S.A.

R52-D